

Eurostrut Catalog

Cable Management Systems
Cable Tube Systems
Mounting Systems

Eurostrut®
Cable Management Systems & Solutions

| + 31 10 522 33 51 | info@eurostrut.com | **eurostrut.com**

That's why Eurostrut

Eurostrut produces and sells cable support and strut mounting systems for use in demanding environments. We supply installation companies and other technically oriented companies. Our products are used in markets such as offshore, chemicals, petrochemicals, heavy industry, energy and combined heat and power plants.
With more than 20 years of knowledge and experience, we are happy to advise you on the most suitable solution for your project.



| + 31 10 522 33 51 | info@eurostrut.com | **eurostrut.com**



Customized solutions: over **20 YEARS** experience

With more than 20 years of know-ledge and experience, Eurostrut is a household name in the market. Did you run into problems and do you need tailor-made advice? No problem. We offer a custom solution for every challenge.



Small-scale and **INVOLVED**

As an independent organization we have a small team of committed employees who are always ready to assist you. We take our pride in quick responses through the phone or email. You can easily place your orders by phone, email or via our website.



Fast delivery with **OWN TRANSPORT SERVICE**

Did you need something urgently? That's not a problem. With our own transport service we deliver your orders quickly and efficiently to any location. We can offer same day delivery, just give us a call to discuss the possibilities.



High quality **OWN BRAND**

All our products meet the highest requirements and are subjected to an extensive inspection upon arrival at our warehouse in Schiedam (NL). Where necessary, products are adjusted and finished to meet our requirements.

Products from our own product line are also hot-dip galvanized to a very high degree. Depending on product type, 80 to 160 m.



Competitive **PRICING**

At Eurostrut we supply and produce the best quality cable support systems and solutions at the most competitive prices. With our own brand you get high quality at low cost. We also supply other brands at sharp prices. Request a quotation today!



Your total supplier with **A LARGE STOCK**

We are a total supplier of cable support systems and solutions. We offer a very complete range, from complete installations to loose mounting materials. With a large stock in our warehouse in Schiedam (NL), we can meet every need.



Sawing & assembly

Would you like to have your strut channels delivered cut to size? That is no problem with Eurostrut. If desired, we will cut your order to size. Upon request, we can either eliminate the residual material or include it in your delivery.

Prefab strut frames

Is your project comprised of multiple repetitive components? Are on-site assembly challenges arising due to specific circumstances? Entrust the (partial) prefabrication of your strut mounting frames to our expert team.

We will assemble your prefab strut frames in our modern workshop in Schiedam. You only have to mount the frames on location.

Transport service

Thanks to our own transport service, we can quickly and efficiently provide you with all the desired materials on location. Partial deliveries, on-demand delivery, urgent deliveries… our logistics team is ready to assist you.

Table of contents

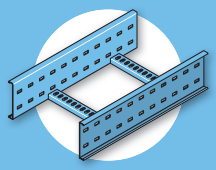

Cable Management Systems

Eurostrut Cable Ladders

Cable Ladders | 60mm 007
Cable Ladders | 100mm 019
Cable Ladders | 150mm 031

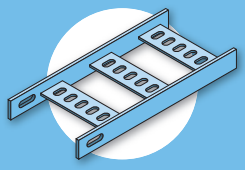

Eurostrut Marine Ladders

Marine Ladders | 30mm 043

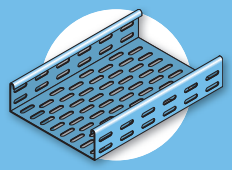

Eurostrut Cable Trays

Cable Trays | 60mm 049
Cable Trays | 100mm 061
Distribution Cable Trays | 50mm 073
Marine Cable Trays | 15mm 079

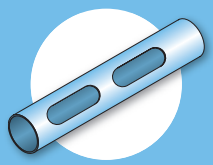

Cable Tube Systems

Eurostrut Cable Protection Tubes

Cable Protection Tubes | 30mm 081
Cable Protection Tubes | 60mm 091

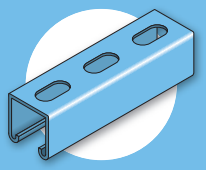

Mounting Systems

Eurostrut Strut

Strut Channels | 41mm 101
Nuts & Accessories 110
Brackets & Base Plates 115

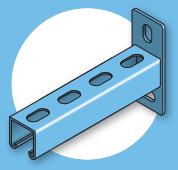

Eurostrut Support Systems

Cantilever Arms 131
Wall & Beam Brackets 134

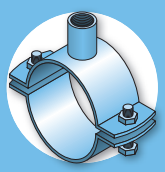

Eurostrut Clamps

Beam Clamps 140
Cable Clamps 145
Pipe Clamps 147
Heavy Duty Pipe Clamps 166

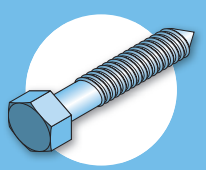

Eurostrut Fixing Material

Fixing Material 187

Your **total** supplier

As a total supplier of cable support and strut mounting systems, we always have cable ladders, marine ladders, cable trays, cable protection tubes, wire trays and mounting materials in stock. We can also deliver Ellis and the nVent range quickly – and in many cases directly from stock.

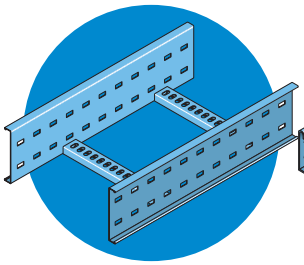

Cable ladders

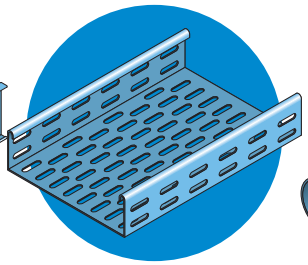

Cable trays

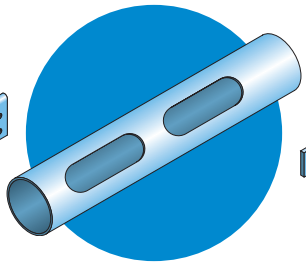

Cable tubes

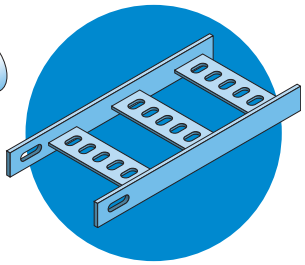

Marine ladders

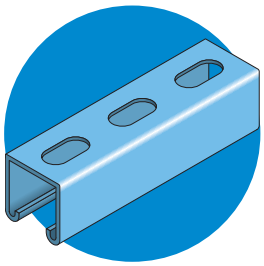

Strut

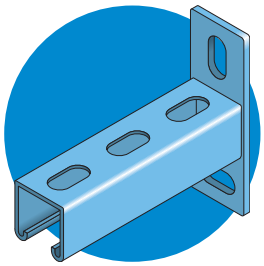

Mounting

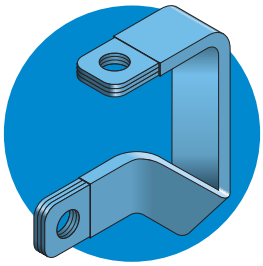

Conductors

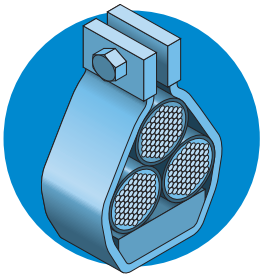

Cable clamps



For our complete range, visit **eurostrut.com**

Quality solutions for your projects

Eurostrut supplies highly loadable cable support systems in various markets such as industry, chemistry, energy, infrastructure, non-residential construction, maritime and offshore. Every market, every segment, every customer has wishes and challenges when it comes to the transit of energy and data. From large spans and cable weights to large temperature differences and moisture. Eurostrut has a suitable solution for every need and situation.

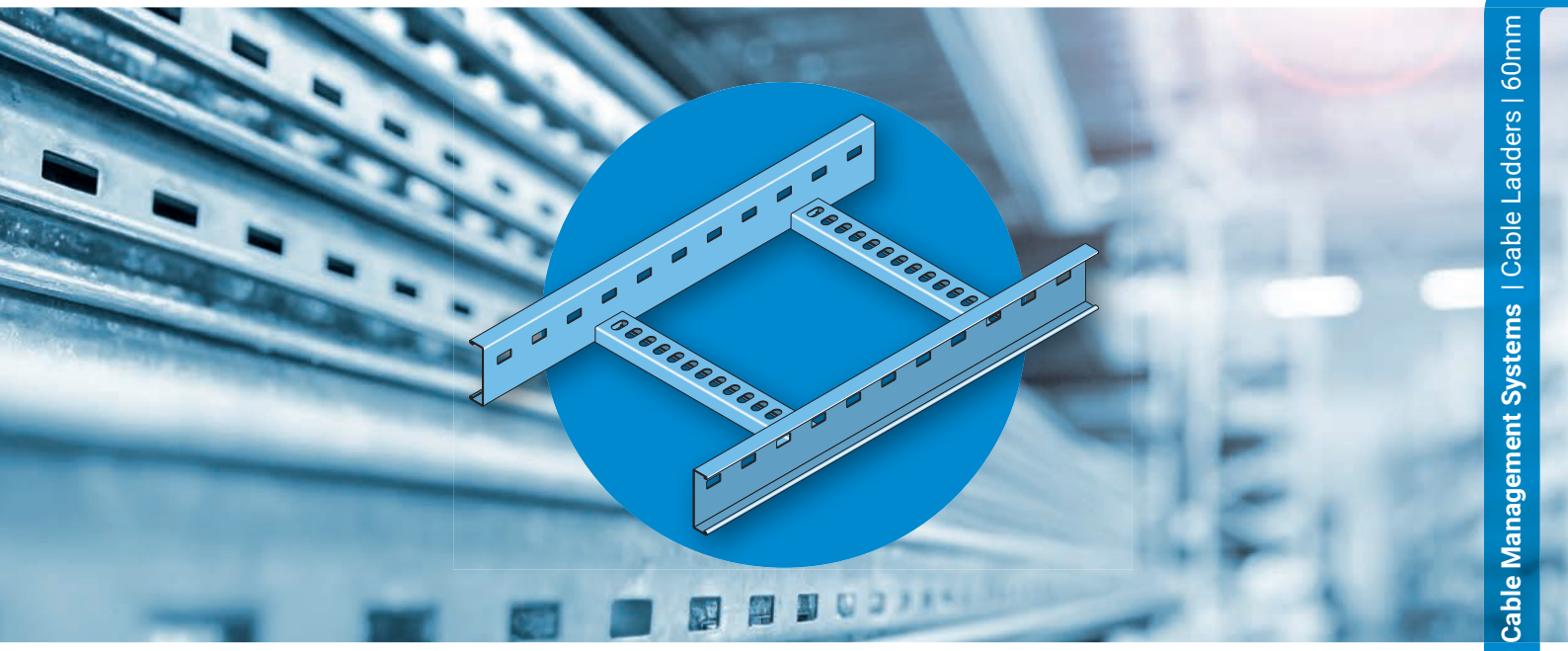

Cable Management Systems

Cable Ladders | 60mm

Medium duty type cable ladder, increased rigidity due to welded rungs made of perforated C-profile

General specifications

- The Eurostrut cable ladder is manufactured in accordance with BS EN 61537 / IEC 61537.
- Standard material is carbon steel, standard surface finish is hot dip galvanized (HDG), in accordance with NEN-EN-ISO 1461.
- Thickness layer for ladders (and most accessories) is 60 to 70 µm.
- (On request) materials also available in stainless steel 304 or 316L.
- Powder coating according to RAL colors possible.
- All rungs are welded to the side wall of the cable ladder.
- Accessories must be supported on all sides.
- The standard heights are 60, 100 and 150 mm.
- The standard angle for accessories is 90°.
- The standard radius for accessories is 300 mm.
- Other angles and radii for accessories are available on request.
- Other widths available on request.

General conditions

- Eurostrut Support Systems & Solutions B.V. is not liable for cable ladders and accessories that are incorrectly installed or where different parts or maintenance methods are applied.
- Although the product information shown in this catalog is accurate and reliable, Eurostrut Support Systems & Solutions B.V. can not be held responsible and liable for inaccuracies.
- The performance data are specific and may be subject to variations due to normal manufacturing tolerances.
- Eurostrut Support Systems & Solutions B.V. reserves the right to change performance information or specifications at any time without notice.

2ba

The convenience of 2ba

Eurostrut's products are listed with all associated information in 2BA's central article database. Product, price and stock information must be continuously available in order to operate efficiently. The 2BA data pool offers the solution.
2ba.nl

The main advantages of 2BA:

- Design, calculate and order more efficiently because all product and price information comes from the same source.
- Data is directly available via the leading ERP software packages or your own custom system.
- You have your own net purchase prices based on Eurostrut's agreed purchasing conditions.

Eurostrut is **ISO 9001 certified**, ensuring quality management across all processes to meet customer requirements and specifications.

By achieving **step 3** certification on the **CO_2 Performance Ladder**, Eurostrut demonstrates its commitment to environmental responsibility and fostering a healthy living environment.

ECL60 | Eurostrut | Cable Ladder

SPECIFICATIONS

- Carbon steel, standard surface finish is hot dip galvanized (HDG), in accordance with NEN-EN-ISO 1461.
- Thickness layer 60 to 70 µm.
- On request: stainless steel 304 or 316L.
- Powder coating according to RAL colors possible.
- All rungs are welded.
- Accessories must be supported on all sides.
- Standard angle for accessories is 90°.
- Length 6 meter.
- 3 meter length available on request.
- Other widths available on request.

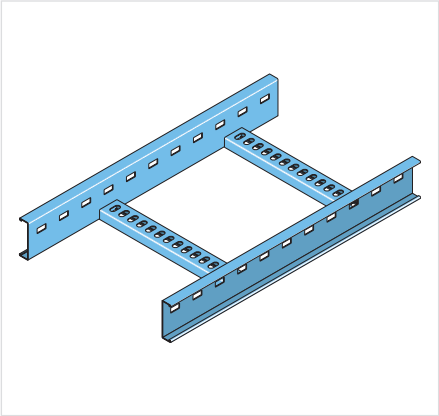

	Article number	W mm	H mm	E mm	kg/ unit
●	ECL60-100-6-HDG	100	60	1,5	19,53
●	ECL60-200-6-HDG	200	60	1,5	21,52
●	ECL60-300-6-HDG	300	60	1,5	23,36
●	ECL60-400-6-HDG	400	60	1,5	25,38
●	ECL60-600-6-HDG	600	60	1,5	29,64

● In stock ● Limited stock ● On request

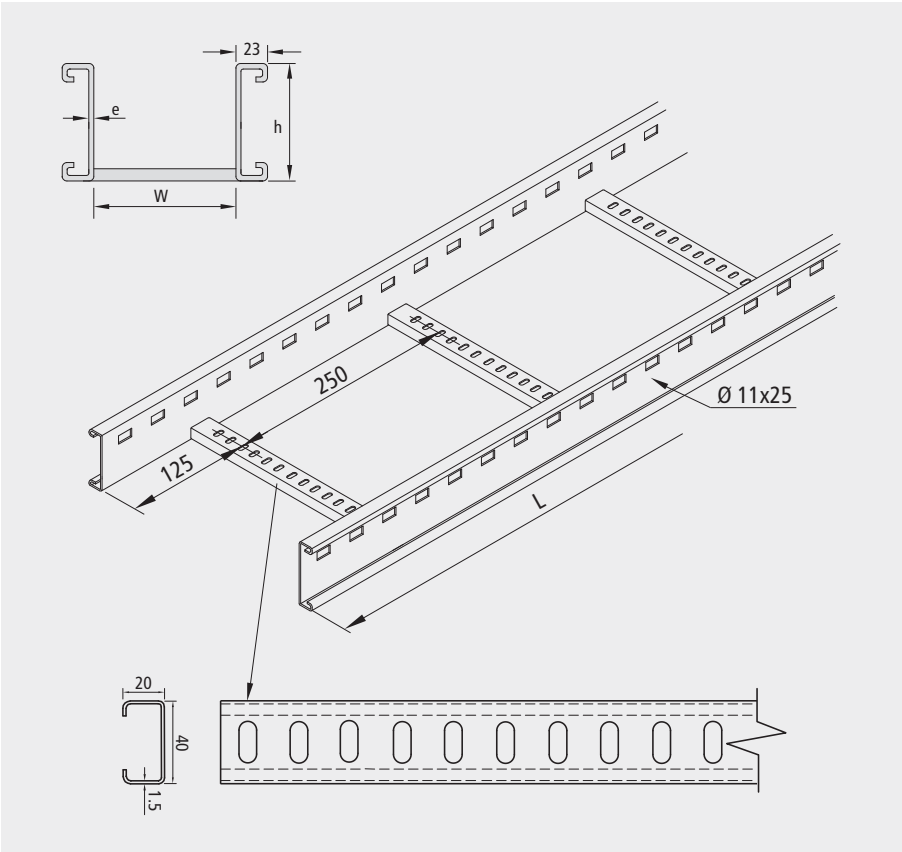

Available surface finishes	Change H to	Stock
Hot dip galvanized	-	●
Stainless steel A4 / 316L	S316	●
Stainless steel A2 / 304	S304	●



EFB60 | Eurostrut | Bend 90° for Cable Ladder ECL60

SPECIFICATIONS

- Carbon steel, standard surface finish is hot dip galvanized (HDG), in accordance with NEN-EN-ISO 1461.
- Thickness layer 60 to 70 µm.
- On request: stainless steel 304 or 316L.
- All rungs are welded.
- Accessories must be supported on all sides.
- Standard angle for accessories is 90°.
- Other widths available on request.

INCLUDING

- 4x ESL-SB-H Fixing Set (Square Neck Bolt M10x20, Nut and Washer)

	Article number	W mm	H mm	E mm	kg/ unit
●	EFB60-100-90-300-HDG	105	54	3	2,86
●	EFB60-200-90-300-HDG	205	54	3	3,39
●	EFB60-300-90-300-HDG	305	54	3	3,89
●	EFB60-400-90-300-HDG	405	54	3	4,82
●	EFB60-600-90-300-HDG	605	54	3	5,64

● In stock ● Limited stock ● On request

Application

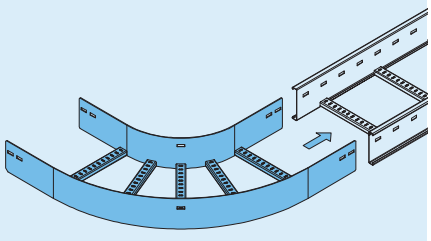

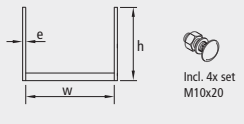

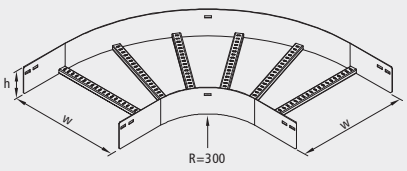

Available surface finishes	Change H to	Stock
Hot dip galvanized	-	●
Stainless steel A4 / 316L	S316	●
Stainless steel A2 / 304	S304	●

EET60 | Eurostrut | T-Piece for Cable Ladder ECL60

SPECIFICATIONS

- Carbon steel, standard surface finish is hot dip galvanized (HDG), in accordance with NEN-EN-ISO 1461.
- Thickness layer 60 to 70 µm.
- On request: stainless steel 304 or 316L.
- All rungs are welded.
- Accessories must be supported on all sides.
- Standard angle for accessories is 90°.
- Other widths available on request.

INCLUDING

- 6x ESL-SB-H Fixing Set (Square Neck Bolt M10x20, Nut and Washer)

Available surface finishes	Change H to	Stock
Hot dip galvanized	-	●
Stainless steel A4 / 316L	S316	●
Stainless steel A2 / 304	S304	●

	Article number	W mm	H mm	E mm	kg/ unit
●	EET60-100-300-HDG	105	54	3	4,64
●	EET60-200-300-HDG	205	54	3	5,37
●	EET60-300-300-HDG	305	54	3	6,17
●	EET60-400-300-HDG	405	54	3	7,46
●	EET60-600-300-HDG	605	54	3	9,62

● In stock ● Limited stock ● On request

Application

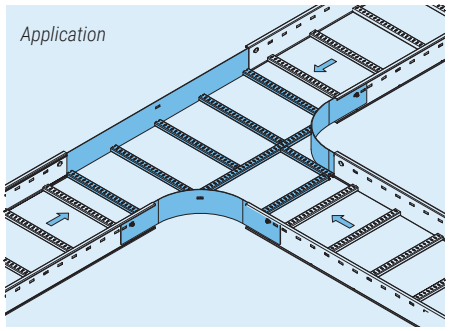

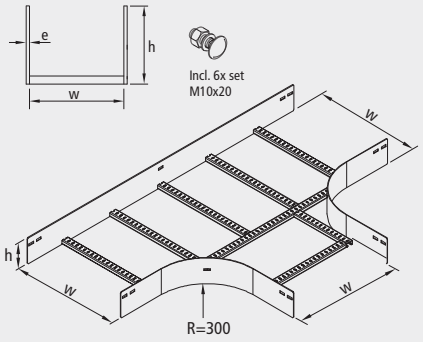

EIR60 | Eurostrut | Inside Riser 90° for Cable Ladder ECL60

SPECIFICATIONS

- Carbon steel, standard surface finish is hot dip galvanized (HDG), in accordance with NEN-EN-ISO 1461.
- Thickness layer 60 to 70 µm.
- On request: stainless steel 304 or 316L.
- All rungs are welded.
- Accessories must be supported on all sides.
- Standard angle for accessories is 90°.
- Other widths available on request.

INCLUDING

- 4x ESL-SB-H Fixing Set (Square Neck Bolt M10x20, Nut and Washer)

Available surface finishes	Change H to	Stock
Hot dip galvanized	-	●
Stainless steel A4 / 316L	S316	●
Stainless steel A2 / 304	S304	●

	Article number	W mm	H mm	E mm	kg/ unit
●	EIR60-100-300-HDG	105	54	3	2,72
●	EIR60-200-300-HDG	205	54	3	3,04
●	EIR60-300-300-HDG	305	54	3	3,34
●	EIR60-400-300-HDG	405	54	3	3,65
●	EIR60-600-300-HDG	605	54	3	4,25

● In stock ● Limited stock ● On request

Application

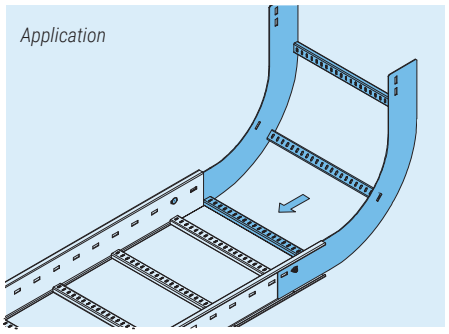

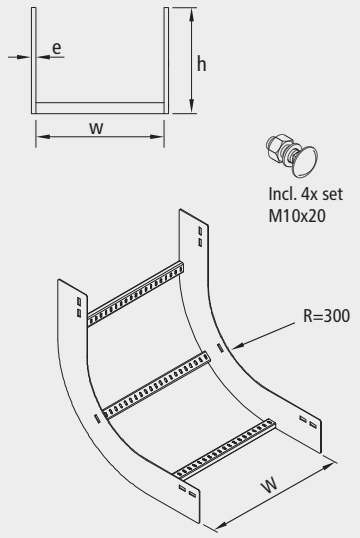

EOR60 | Eurostrut | Outside Riser 90° for Cable Ladder ECL60

SPECIFICATIONS

- Carbon steel, standard surface finish is hot dip galvanized (HDG), in accordance with NEN-EN-ISO 1461.
- Thickness layer 60 to 70 µm.
- On request: stainless steel 304 or 316L.
- All rungs are welded.
- Accessories must be supported on all sides.
- Standard angle for accessories is 90°.
- Other widths available on request.

INCLUDING

- 4x ESL-SB-H Fixing Set (Square Neck Bolt M10x20, Nut and Washer)

Available surface finishes	Change H to	Stock
Hot dip galvanized	-	●
Stainless steel A4 / 316L	S316	●
Stainless steel A2 / 304	S304	●

	Article number	W mm	H mm	E mm	kg/ unit
●	EOR60-100-300-HDG	105	54	3	2,72
●	EOR60-200-300-HDG	205	54	3	3,04
●	EOR60-300-300-HDG	305	54	3	3,34
●	EOR60-400-300-HDG	405	54	3	3,65
●	EOR60-600-300-HDG	605	54	3	4,25

● In stock ● Limited stock ● On request

Application

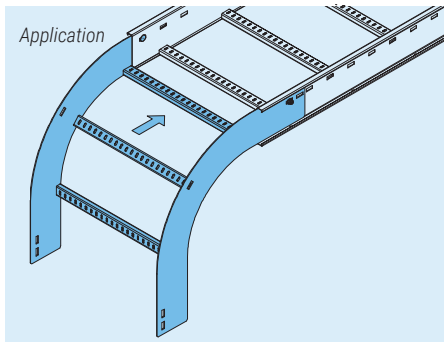

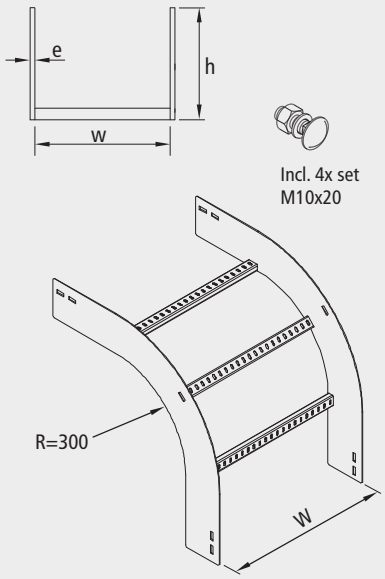

ECO60 | Eurostrut | Crossover for Cable Ladder ECL60

SPECIFICATIONS

- Carbon steel, standard surface finish is hot dip galvanized (HDG), in accordance with NEN-EN-ISO 1461.
- Thickness layer 60 to 70 µm.
- On request: stainless steel 304 or 316L.
- All rungs are welded.
- Accessories must be supported on all sides.
- Standard angle for accessories is 90°.
- Other widths available on request.

INCLUDING

- 8x ESL-SB-H Fixing Set (Square Neck Bolt M10x20, Nut and Washer)

Available surface finishes	Change H to	Stock
Hot dip galvanized	-	●
Stainless steel A4 / 316L	S316	●
Stainless steel A2 / 304	S304	●

	Article number	W mm	H mm	E mm	kg/ unit
●	ECO60-100-300-HDG	105	54	3	5,55
●	ECO60-200-300-HDG	205	54	3	6,51
●	ECO60-300-300-HDG	305	54	3	7,37
●	ECO60-400-300-HDG	405	54	3	8,32
●	ECO60-600-300-HDG	605	54	3	10,13

● In stock ● Limited stock ● On request

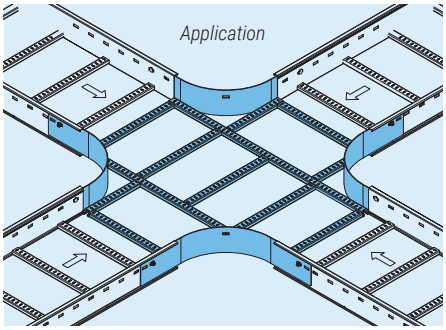

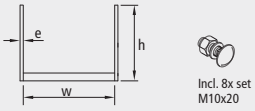

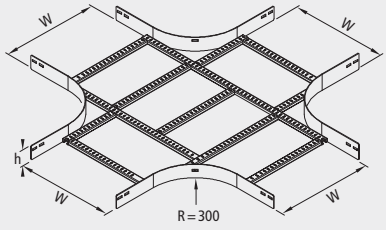



ESD60 | Eurostrut | Divider Straight for Cable Ladder ECL60

SPECIFICATIONS

- Carbon steel, standard surface finish is hot dip galvanized (HDG), in accordance with NEN-EN-ISO 1461.
- Thickness layer 60 to 70 µm.
- On request: stainless steel 304 or 316L.

INCLUDING

- 3x EFS08x15-HDG Fixing Set (Square Neck Bolt M8x15, Nut and Washer).

	Article number	L mm	H mm	B mm	E mm	kg/ unit
●	ESD60-HDG	3000	35	25	1,5	2,23

● In stock ● Limited stock ● On request

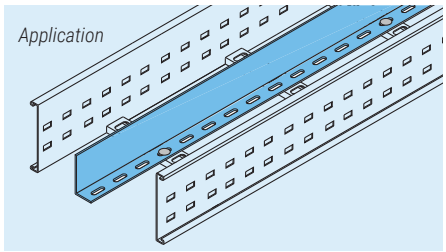

Available surface finishes	Change H to	Stock
Hot dip galvanized	-	●
Stainless steel A4 / 316L	S316	●
Stainless steel A2 / 304	S304	●

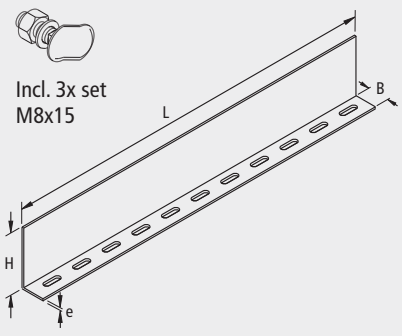

ELHR60 | Eurostrut | Left Hand Reducer for Cable Ladder ECL60

SPECIFICATIONS

- For complete set you need also an jointing piece ECP60.
- Carbon steel, standard surface finish is hot dip galvanized (HDG), in accordance with NEN-EN-ISO 1461.
- Thickness layer 60 to 70 µm.
- On request: stainless steel 304 or 316L.
- Accessories must be supported on all sides.

INCLUDING

- 4x ESL-SB-H Fixing Set (Square Neck Bolt M10x20, Nut and Washer).

Available surface finishes	Change H to	Stock
Hot dip galvanized	-	●
Stainless steel A4 / 316L	S316	●
Stainless steel A2 / 304	S304	●

Application

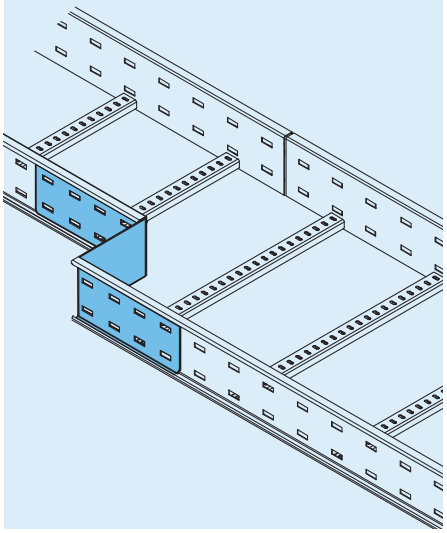

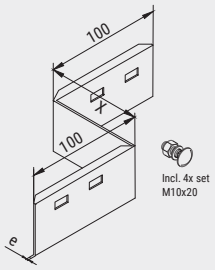

	Article number	X mm	H mm	E mm	kg/ unit
●	ELHR60-50-HDG	50	54	2	0,90
●	ELHR60-100-HDG	100	54	2	0,98
●	ELHR60-150-HDG	150	54	2	1,04
●	ELHR60-200-HDG	200	54	2	1,06
●	ELHR60-250-HDG	250	54	2	1,11
●	ELHR60-300-HDG	300	54	2	1,17

● In stock ● Limited stock ● On request

ERHR60 | Eurostrut | Right Hand Reducer for Cable Ladder ECL60

SPECIFICATIONS

- For complete set you need also an jointing piece ECP60.
- Carbon steel, standard surface finish is hot dip galvanized (HDG), in accordance with NEN-EN-ISO 1461.
- Thickness layer 60 to 70 µm.
- On request: stainless steel 304 or 316L.
- Accessories must be supported on all sides.

INCLUDING

- 4x ESL-SB-H Fixing Set (Square Neck Bolt M10x20, Nut and Washer).

Available surface finishes	Change H to	Stock
Hot dip galvanized	-	●
Stainless steel A4 / 316L	S316	●
Stainless steel A2 / 304	S304	●

Application

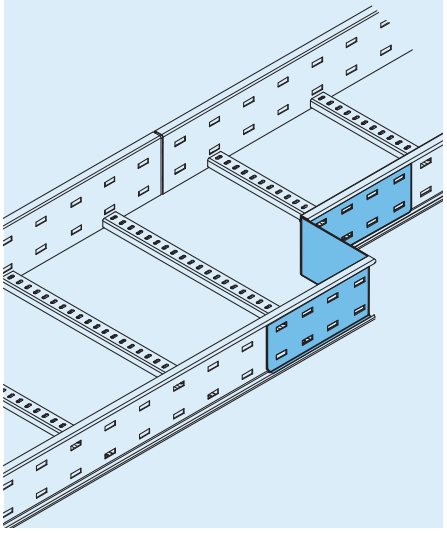

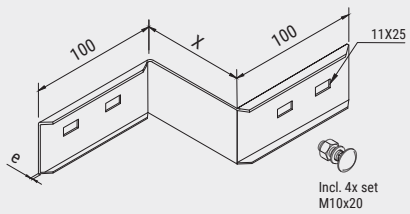

	Article number	X mm	H mm	E mm	kg/ unit
●	ERHR60-50-HDG	50	54	2	0,90
●	ERHR60-100-HDG	100	54	2	0,98
●	ERHR60-150-HDG	150	54	2	1,04
●	ERHR60-200-HDG	200	54	2	1,06
●	ERHR60-250-HDG	250	54	2	1,11
●	ERHR60-300-HDG	300	54	2	1,17

● In stock ● Limited stock ● On request

Eurostrut | Straight Reducer for Cable Ladder ECL60

NOTE

- For a straight reducer, combine a left hand reducer plate and a right hand reducer plate.
- For straight reducer combination X = width difference of ladders divided by two.

Application

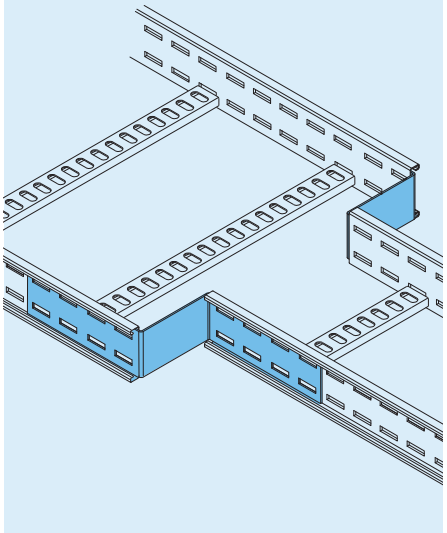

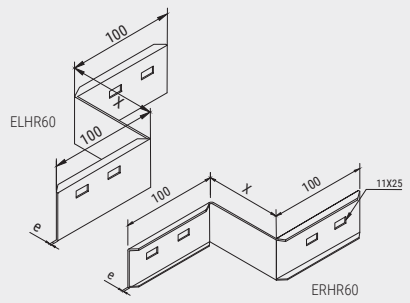

ECP60 | Eurostrut | Coupler Plate for Cable Ladder ECL60

SPECIFICATIONS

- Carbon steel, standard surface finish is hot dip galvanized (HDG), in accordance with NEN-EN-ISO 1461.
- Thickness layer 60 to 70 µm.
- On request: stainless steel 304 or 316L.

INCLUDING

- 4x ESL-SB-H Fixing Set (Square Neck Bolt M10x20, Nut and Washer).

	Article number	L mm	H mm	E mm	kg/ unit
●	ECP60-HDG	200	54	2	0,25

● In stock ● Limited stock ● On request

Available surface finishes	Change H to	Stock
Hot dip galvanized	-	●
Stainless steel A4 / 316L	S316	●
Stainless steel A2 / 304	S304	●

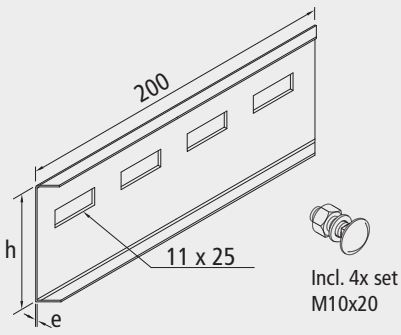

EVHCP60 | Eurostrut | Coupler Plate Vertical for Cable Ladder ECL60

SPECIFICATIONS

- Carbon steel, standard surface finish is hot dip galvanized (HDG), in accordance with NEN-EN-ISO 1461.
- Thickness layer 60 to 70 µm.
- On request: stainless steel 304 or 316L.

INCLUDING

- 4x ESL-SB-H Fixing Set (Square Neck Bolt M10x20, Nut and Washer).

	Article number	L mm	H mm	E mm	kg/ unit
●	EVHCP60-HDG	270	54	2	0,32

● In stock ● Limited stock ● On request

Available surface finishes	Change H to	Stock
Hot dip galvanized	-	●
Stainless steel A4 / 316L	S316	●
Stainless steel A2 / 304	S304	●

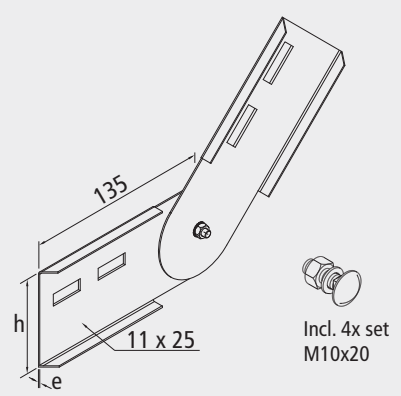

EHHCP60 | Eurostrut | Coupler Plate Horizontal for Cable Ladder ECL60

SPECIFICATIONS

- Carbon steel, standard surface finish is hot dip galvanized (HDG), in accordance with NEN-EN-ISO 1461.
- Thickness layer 60 to 70 µm.
- On request: stainless steel 304 or 316L.

INCLUDING

- 4x ESL-SB-H Fixing Set (Square Neck Bolt M10x20, Nut and Washer).

	Article number	L mm	H mm	E mm	kg/ unit
●	EHHCP60-HDG	270	54	2	0,75

● In stock ● Limited stock ● On request

Available surface finishes	Change H to	Stock
Hot dip galvanized	-	●
Stainless steel A4 / 316L	S316	●
Stainless steel A2 / 304	S304	●

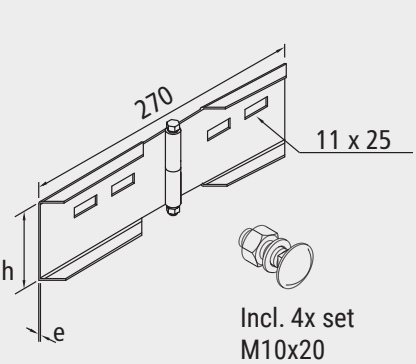

EECP60 | Eurostrut | Expansion Coupler Plate for Cable Ladder ECL60

SPECIFICATIONS

- Carbon steel, standard surface finish is hot dip galvanized (HDG), in accordance with NEN-EN-ISO 1461.
- Thickness layer 60 to 70 µm.
- On request: stainless steel 304 or 316L.

INCLUDING

- 4x ESL-SB-H Fixing Set (Square Neck Bolt M10x20, Nut and Washer).

	Article number	L mm	H mm	E mm	kg/ unit
●	EECP60-HDG	280	54	2	0,90

● In stock ● Limited stock ● On request

Available surface finishes	Change H to	Stock
Hot dip galvanized	-	●
Stainless steel A4 / 316L	S316	●
Stainless steel A2 / 304	S304	●

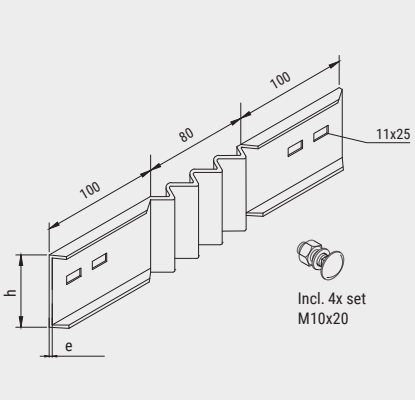

| + 31 10 522 33 51 | info@eurostrut.com | eurostrut.com

EEC60 | Eurostrut | End Connector for Cable Ladder ECL60

SPECIFICATIONS
- Carbon steel, standard surface finish is hot dip galvanized (HDG), in accordance with NEN-EN-ISO 1461.
- Thickness layer 45 to 55 µm.
- On request: stainless steel 304 or 316L.

INCLUDING
- 2x ESL-SB-H Fixing Set (Square Neck Bolt M10x20, Nut and Washer).

	Article number	H mm	E mm	kg/ unit
●	EEC60-HDG	40	3	0,21

● In stock ● Limited stock ● On request

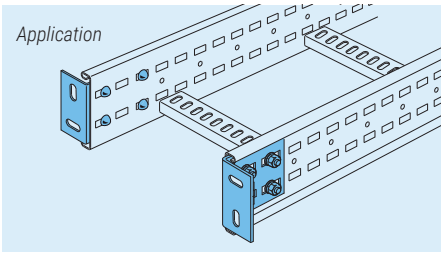

Available surface finishes	Change H to	Stock
Hot dip galvanized	-	●
Stainless steel A4 / 316L	S316	●
Stainless steel A2 / 304	S304	●

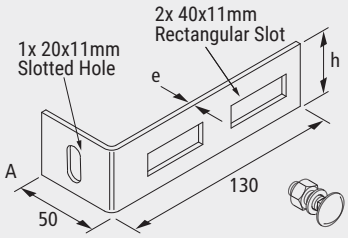

EWSB60 | Eurostrut | Wall Support Bracket for Cable Ladder ECL60

SPECIFICATIONS
- Carbon steel, standard surface finish is hot dip galvanized (HDG), in accordance with NEN-EN-ISO 1461.
- Thickness layer 60 to 70 µm.
- On request: stainless steel 304 or 316L.

INCLUDING
- 2x ESL-SB-H Fixing Set (Square Neck Bolt M10x20, Nut and Washer).

	Article number	A mm	B mm	E mm	kg/ unit
●	EWSB60-HDG	52,5	37	2	0,25

● In stock ● Limited stock ● On request

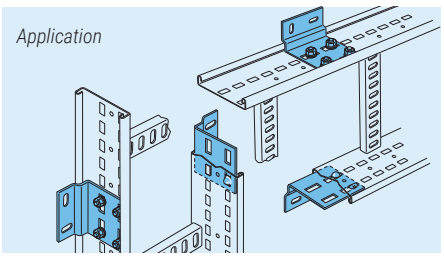

Available surface finishes	Change H to	Stock
Hot dip galvanized	-	●
Stainless steel A4 / 316L	S316	●
Stainless steel A2 / 304	S304	●

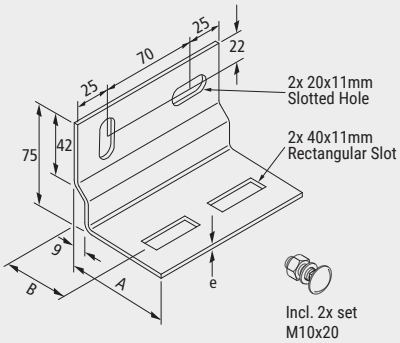

EHRB60 | Eurostrut | Hanger Rod Bracket for Cable Ladder ECL60

SPECIFICATIONS
- Carbon steel, standard surface finish is hot dip galvanized (HDG), in accordance with NEN-EN-ISO 1461.
- Thickness layer 60 to 70 µm.
- On request: stainless steel 304 or 316L.

INCLUDING
- 2x ESL-SB-H Fixing Set (Square Neck Bolt M10x20, Nut and Washer).

	Article number	A mm	B mm	C mm	E mm	kg/ unit
●	EHRB60-HDG	65	39	26	2	0,35

● In stock ● Limited stock ● On request

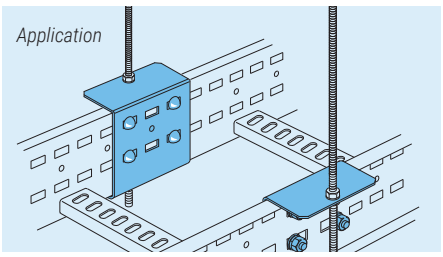

Available surface finishes	Change H to	Stock
Hot dip galvanized	-	●
Stainless steel A4 / 316L	S316	●
Stainless steel A2 / 304	S304	●

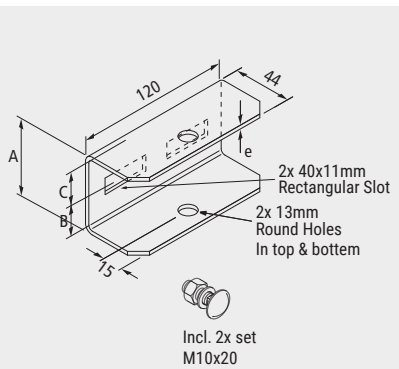

Your total supplier of Cable Management Systems & Solutions

Cable Ladders | Cable Trays | Marine Ladders | Conduit | Pipe Clamps | Strut Mounting Systems **& more!**

Visit eurostrut.com for our complete range

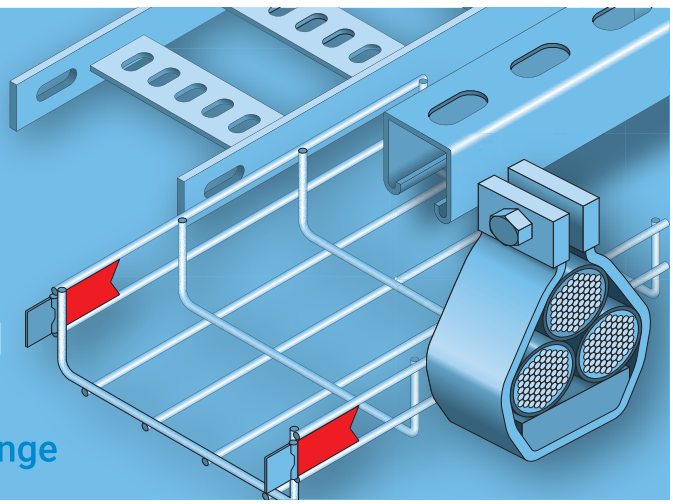



In all RAL colours!

Powder coating according to RAL colours possible.
Ask our sales team: +31 10 522 33 51

EHDC | Eurostrut | Hold Down Clip for Cable Ladder ECL

SPECIFICATIONS

- For cable ladders ECL60, ECL100 and ECL150.
- Carbon steel, standard surface finish is hot dip galvanized (HDG), in accordance with NEN-EN-ISO 1461.
- Thickness layer 60 to 70 µm.
- Also available in stainless steel 304 or 316L.

	Article number	L mm	W mm	E mm	kg/ unit
●	EHDC-HDG	70	40	3	0,07

● In stock ● Limited stock ● On request

Application

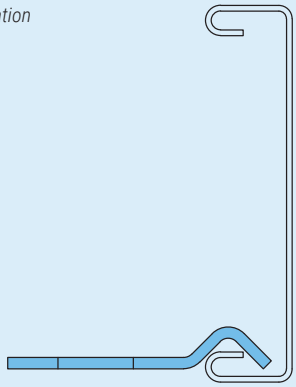

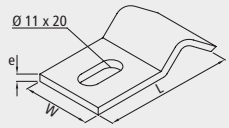

Available surface finishes	Change H to	Stock
Hot dip galvanized	-	●
Stainless steel A4 / 316L	S316	●
Stainless steel A2 / 304	S304	●

EHDB60 | Eurostrut | Hold Down Bracket for Cable Ladder ECL60

SPECIFICATIONS

- Carbon steel, standard surface finish is hot dip galvanized (HDG), in accordance with NEN-EN-ISO 1461.
- Thickness layer 45 to 55 µm.
- On request: stainless steel 304 or 316L.

	Article number	L mm	W mm	E mm	kg/ unit
●	EHDB60-HDG	60	40	2	0,09

● In stock ● Limited stock ● On request

Application

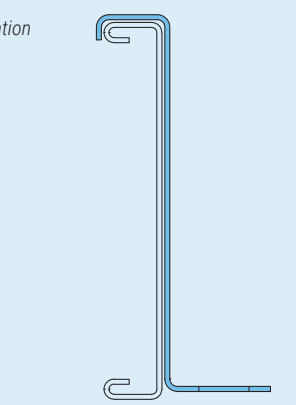

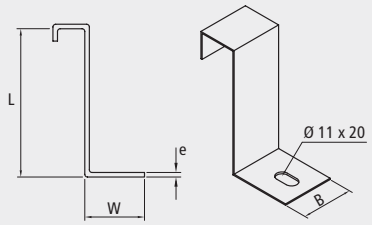

Available surface finishes	Change H to	Stock
Hot dip galvanized	-	●
Stainless steel A4 / 316L	S316	●
Stainless steel A2 / 304	S304	●

Stay up to date!

Follow **@eurostrut** on social media and sign in to our newsletter:
www.eurostrut.com/en/newsletter



ECLSC | Eurostrut | Cover for Cable Ladder ECL

SPECIFICATIONS

- For cable ladders ECL60, ECL100 and ECL150.
- Carbon steel, standard surface finish is hot dip galvanized (HDG), in accordance with NEN-EN-ISO 1461.
- Thickness layer 60 to 70 µm.
- Also available in stainless steel 304 or 316L.
- Other widths available on request.

	Article number	W mm	H mm	E mm	kg/ unit
●	ECLSC100-HDG	150	9	1	3,96
●	ECLSC200-HDG	250	9	1	6,31
●	ECLSC300-HDG	350	9	1	8,67
●	ECLSC400-HDG	450	9	1,5	16,53
●	ECLSC500-HDG	550	9	1,5	20,06
●	ECLSC600-HDG	650	9	1,5	23,60
●	ECLSC700-HDG	750	9	2	36,17
●	ECLSC800-HDG	850	9	2	40,88
●	ECLSC900-HDG	950	9	2	45,59
●	ECLSC1000-HDG	1050	9	2	50,30

● In stock ● Limited stock ● On request

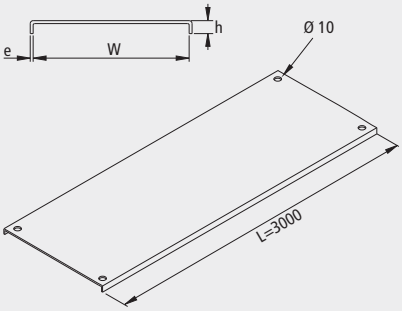

Available surface finishes	Change H to	Stock
Hot dip galvanized	-	●
Stainless steel A4 / 316L	S316	●
Stainless steel A2 / 304	S304	●

Application (with ECC)

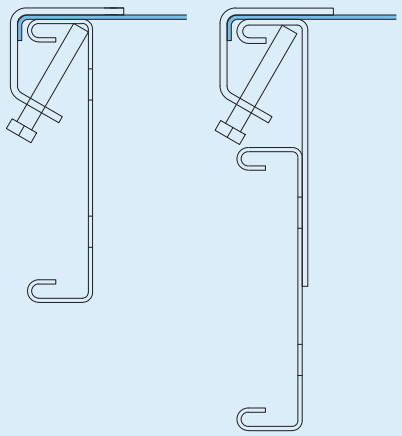

EFBC | Eurostrut | Cover Bend 90° for Cable Ladder ECL

SPECIFICATIONS

- For cable ladders ECL60, ECL100 and ECL150.
- Carbon steel, standard surface finish is hot dip galvanized (HDG), in accordance with NEN-EN-ISO 1461.
- Thickness layer 60 to 70 µm.
- Also available in stainless steel 304 or 316L
- Standard angle for accessories is 90°.
- The following angles for accessories available on request: 30°, 45° and 60°.
- Standard radius for accessories is 300 mm.
- The following radii for accessories available on request: 450 mm, 600 mm and 900 mm.
- Other widths available on request.

	Article number	W mm	H mm	E mm	kg/ unit
●	EFBC100-90-300-HDG	150	9	1	1,00
●	EFBC200-90-300-HDG	250	9	1	2,00
●	EFBC300-90-300-HDG	350	9	1	4,00
●	EFBC400-90-300-HDG	450	9	1,5	5,50
●	EFBC500-90-300-HDG	550	9	1,5	9,00
●	EFBC600-90-300-HDG	650	9	1,5	11,50
●	EFBC700-90-300-HDG	750	9	2	16,00
●	EFBC800-90-300-HDG	850	9	2	19,50
●	EFBC900-90-300-HDG	950	9	2	22,50
●	EFBC1000-90-300-HDG	1050	9	2	25,50

● In stock ● Limited stock ● On request

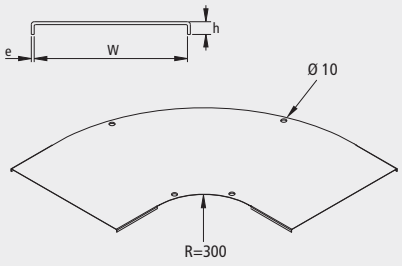

Available surface finishes	Change H to	Stock
Hot dip galvanized	-	●
Stainless steel A4 / 316L	S316	●
Stainless steel A2 / 304	S304	●

Application (with EHBCC/EVHBCC)

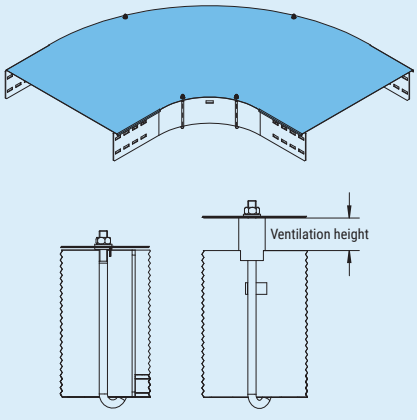

EETC | Eurostrut | Cover T-Piece for Cable Ladder ECL

SPECIFICATIONS

- For cable ladders ECL60, ECL100 and ECL150.
- Carbon steel, standard surface finish is hot dip galvanized (HDG), in accordance with NEN-EN-ISO 1461.
- Thickness layer 60 to 70 µm.
- Also available in stainless steel 304 or 316L.
- Standard angle for accessories is 90°.
- Other widths available on request.

	Article number	W mm	H mm	E mm	kg/ unit
●	EETC100-300-HDG	150	9	1	2,00
●	EETC200-300-HDG	250	9	1	4,00
●	EETC300-300-HDG	350	9	1	7,00
●	EETC400-300-HDG	450	9	1,5	9,50
●	EETC500-300-HDG	550	9	1,5	15,50
●	EETC600-300-HDG	650	9	1,5	18,50
●	EETC700-300-HDG	750	9	2	26,50
●	EETC800-300-HDG	850	9	2	31,00
●	EETC900-300-HDG	950	9	2	36,00
●	EETC1000-300-HDG	1050	9	2	41,00

● In stock ● Limited stock ● On request

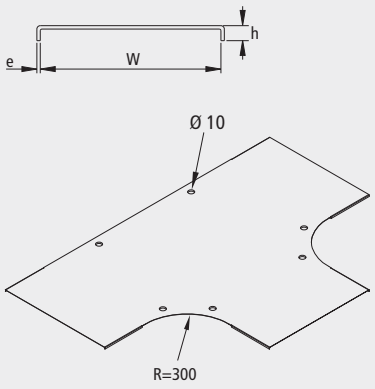

Available surface finishes	Change H to	Stock
Hot dip galvanized	-	●
Stainless steel A4 / 316L	S316	●
Stainless steel A2 / 304	S304	●

Application (with EHBCC/EVHBCC)

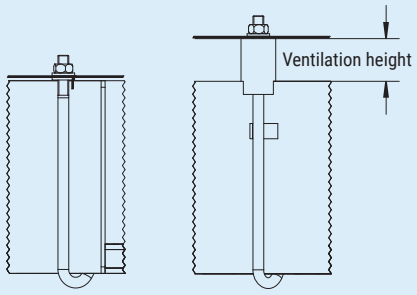

ECOC | Eurostrut | Cover Crossover for Cable Ladder ECL

SPECIFICATIONS

- For cable ladders ECL60, ECL100 and ECL150.
- Carbon steel, standard surface finish is hot dip galvanized (HDG), in accordance with NEN-EN-ISO 1461.
- Thickness layer 60 to 70 µm.
- Also available in stainless steel 304 or 316L.
- Standard angle for accessories is 90°.
- Other widths available on request.

	Article number	W mm	H mm	E mm	kg/ unit
●	ECOC100-300-HDG	150	9	1	3,00
●	ECOC200-300-HDG	250	9	1	5,00
●	ECOC300-300-HDG	350	9	1	9,50
●	ECOC400-300-HDG	450	9	1,5	14,50
●	ECOC500-300-HDG	550	9	1,5	19,50
●	ECOC600-300-HDG	650	9	1,5	24,00
●	ECOC700-300-HDG	750	9	2	34,00
●	ECOC800-300-HDG	850	9	2	39,00
●	ECOC900-300-HDG	950	9	2	45,00
●	ECOC1000-300-HDG	1050	9	2	51,00

● In stock ● Limited stock ● On request

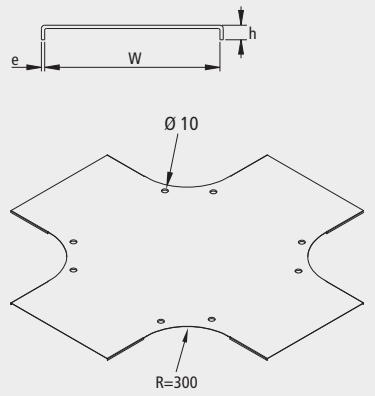

Available surface finishes	Change H to	Stock
Hot dip galvanized	-	●
Stainless steel A4 / 316L	S316	●
Stainless steel A2 / 304	S304	●

Application (with EHBCC/EVHBCC)

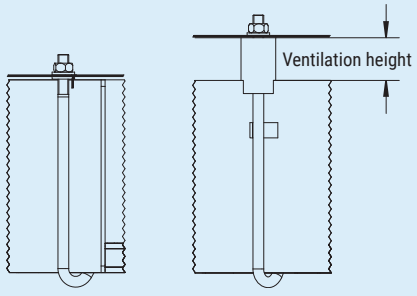

| + 31 10 522 33 51 | info@eurostrut.com | eurostrut.com

EIRC | Eurostrut | Cover Inside Riser 90° for Cable Ladder ECL

SPECIFICATIONS

- For cable ladders ECL60, ECL100 and ECL150.
- Carbon steel, standard surface finish is hot dip galvanized (HDG), in accordance with NEN-EN-ISO 1461.
- Thickness layer 60 to 70 µm.
- Also available in stainless steel 304 or 316L.
- Standard angle for accessories is 90°.
- Other widths available on request.

	Article number	W mm	H mm	E mm	kg/ unit
●	EIRC100-90-300-HDG	150	9	1	1,00
●	EIRC200-90-300-HDG	250	9	1	2,00
●	EIRC300-90-300-HDG	350	9	1	4,00
●	EIRC400-90-300-HDG	450	9	1,5	5,00
●	EIRC500-90-300-HDG	550	9	1,5	8,00
●	EIRC600-90-300-HDG	650	9	1,5	9,50
●	EIRC700-90-300-HDG	750	9	2	13,50
●	EIRC800-90-300-HDG	850	9	2	15,00
●	EIRC900-90-300-HDG	950	9	2	17,00
●	EIRC1000-90-300-HDG	1050	9	2	19,00

● In stock ● Limited stock ● On request

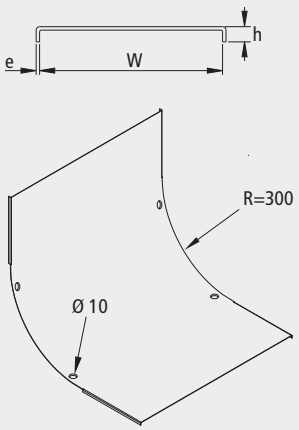

Available surface finishes	Change H to	Stock
Hot dip galvanized	-	●
Stainless steel A4 / 316L	S316	●
Stainless steel A2 / 304	S304	●

Application (with EHBCC/EVHBCC)

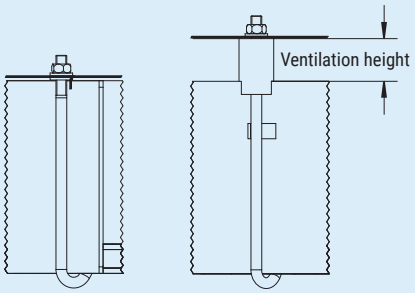

EORC | Eurostrut | Cover Outside Riser 90° for Cable Ladder ECL

SPECIFICATIONS

- For cable ladders ECL60, ECL100 and ECL150.
- Carbon steel, standard surface finish is hot dip galvanized (HDG), in accordance with NEN-EN-ISO 1461.
- Thickness layer 60 to 70 µm.
- Also available in stainless steel 304 or 316L.
- Standard angle for accessories is 90°.
- Other widths available on request.

	Article number	W mm	H mm	E mm	kg/ unit
●	EORC100-90-300-HDG	150	9	1	1,00
●	EORC200-90-300-HDG	250	9	1	2,00
●	EORC300-90-300-HDG	350	9	1	4,00
●	EORC400-90-300-HDG	450	9	1,5	5,00
●	EORC500-90-300-HDG	550	9	1,5	8,00
●	EORC600-90-300-HDG	650	9	1,5	9,50
●	EORC700-90-300-HDG	750	9	2	13,50
●	EORC800-90-300-HDG	850	9	2	15,00
●	EORC900-90-300-HDG	950	9	2	17,00
●	EORC1000-90-300-HDG	1050	9	2	19,00

● In stock ● Limited stock ● On request

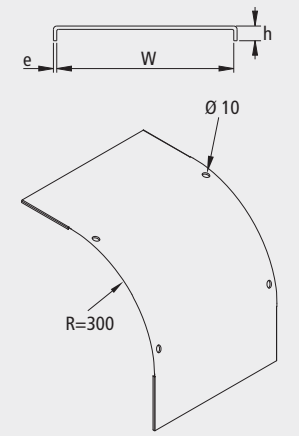

Available surface finishes	Change H to	Stock
Hot dip galvanized	-	●
Stainless steel A4 / 316L	S316	●
Stainless steel A2 / 304	S304	●

Application (with EHBCC/EVHBCC)

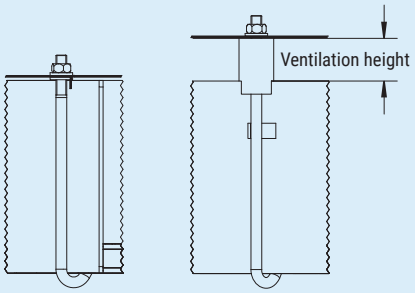

ECC | Eurostrut | Cover Clamp for Cable Ladders ECL

SPECIFICATIONS

- For cable ladders ECL60, 100 and 150.
- Carbon steel, standard surface finish is hot dip galvanized (HDG), in accordance with NEN-EN-ISO 1461.
- Thickness layer 60 to 70 µm.
- On request: stainless steel 304 or 316L.

INCLUDING

- 1x M6x40 hex head screw

	Article number	L mm	W mm	E mm	kg/ unit
●	ECC-HDG	40	30	2,5	0,05

● In stock ● Limited stock ● On request

Application

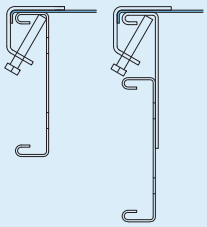

Available surface finishes	Change H to	Stock
Hot dip galvanized	-	●
Stainless steel A4 / 316L	S316	●
Stainless steel A2 / 304	S304	●

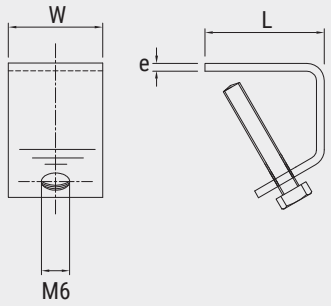

EHBCC60 | Eurostrut | Hook Bolt Cover Clamp for Cable Ladder ECL60

SPECIFICATIONS

- Carbon steel, standard surface finish is hot dip galvanized (HDG), in accordance with NEN-EN-ISO 1461.
- Thickness layer 60 to 70 µm.
- On request: stainless steel 304 or 316L.

	Article number	L mm	Th mm	H mm	kg/ unit
●	EHBCC60-HDG	55	25	20	-

● In stock ● Limited stock ● On request

Application

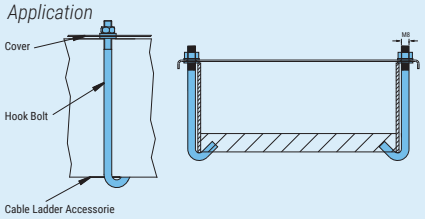

Available surface finishes	Change H to	Stock
Hot dip galvanized	-	●
Stainless steel A4 / 316L	S316	●
Stainless steel A2 / 304	S304	●

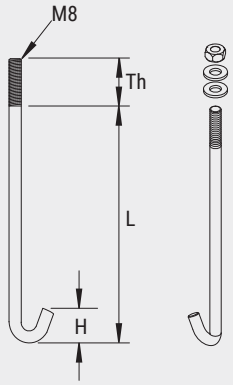

EPEC60 | Eurostrut | Protective End Cap for Cable Ladder ECL60

SPECIFICATIONS

- Material: polyvinyl chloride.
- Color: yellow RAL1021.
- Shore hardness 70°, +/-5° measured at 20°C.
- Tensile strength 15MPa.
- Suitable for temperatures between -15°C and 60°C.

	Article number	H mm	W mm	kg/ unit
●	EPEC60-PY	60	25	0,05

● In stock ● Limited stock ● On request

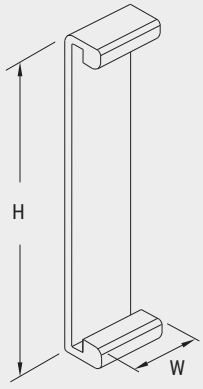

ESL-SB / EFS | Eurostrut | Fixing Set | Square Neck Bolt + Washer + Nut

SPECIFICATIONS

- Surface finish:
  - Hot dip galvanized (H)
  - Stainless steel A4 / 316L (S316)
  - Stainless steel A2 / 304 (S304)
  - Geomet® (GEO)

	Article number	MxL mm	kg/ unit
●	ESL-SB-H	M10x20	0,04
●	ESL-SB-S304	M10x20	0,04
●	ESL-SB-S316	M10x20	0,04
●	EFS06x15-304	M6x15	0,01
●	EFS06x15-316	M6x15	0,01
●	EFS06x15-GEO	M6x15	0,01
●	EFS08x15-304	M8x15	0,014
●	EFS08x15-316	M8x15	0,014
●	EFS08x15-GEO	M8x15	0,014

● In stock ● Limited stock ● On request

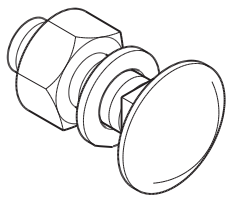

| + 31 10 522 33 51 | info@eurostrut.com | eurostrut.com

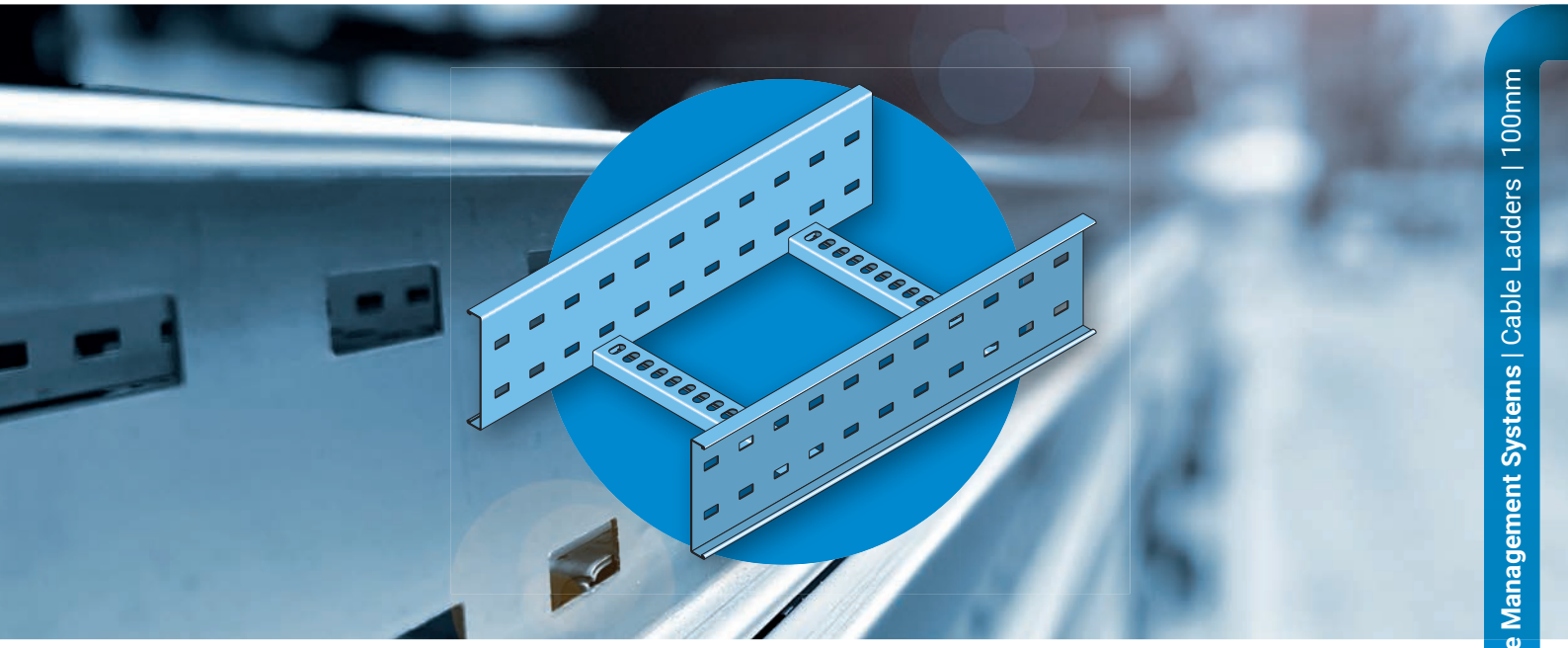

Cable Management Systems
Cable Ladders | 100mm
Heavy duty type cable ladder, increased rigidity due to welded rungs made of perforated C-profile

General specifications

- The Eurostrut cable ladder is manufactured in accordance with BS EN 61537 / IEC 61537.
- Standard material is carbon steel, standard surface finish is hot dip galvanized (HDG), in accordance with NEN-EN-ISO 1461.
- Thickness layer for ladders (and most accessories) is 60 to 70 µm.
- (On request) materials also available in stainless steel 304 or 316L.
- Powder coating according to RAL colors possible.
- All rungs are welded to the side wall of the cable ladder.
- Accessories must be supported on all sides.
- The standard heights are 60, 100 and 150 mm.
- The standard angle for accessories is 90°.
- The standard radius for accessories is 300 mm.
- Other angles and radii for accessories are available on request.
- Other widths available on request.

General conditions

- Eurostrut Support Systems & Solutions B.V. is not liable for cable ladders and accessories that are incorrectly installed or where different parts or maintenance methods are applied.
- Although the product information shown in this catalog is accurate and reliable, Eurostrut Support Systems & Solutions B.V. can not be held responsible and liable for inaccuracies.
- The performance data are specific and may be subject to variations due to normal manufacturing tolerances.
- Eurostrut Support Systems & Solutions B.V. reserves the right to change performance information or specifications at any time without notice.

2ba

The convenience of 2ba

Eurostrut's products are listed with all associated information in 2BA's central article database. Product, price and stock information must be continuously available in order to operate efficiently. The 2BA data pool offers the solution.

2ba.nl

The main advantages of 2BA:

- Design, calculate and order more efficiently because all product and price information comes from the same source.
- Data is directly available via the leading ERP software packages or your own custom system.
- You have your own net purchase prices based on Eurostrut's agreed purchasing conditions.

Eurostrut is **ISO 9001 certified**, ensuring quality management across all processes to meet customer requirements and specifications.

By achieving **step 3** certification on the **CO_2 Performance Ladder**, Eurostrut demonstrates its commitment to environmental responsibility and fostering a healthy living environment.

ECL100 | Eurostrut | Cable Ladder

SPECIFICATIONS

- Standard surface finish is hot dip galvanized (HDG) carbon steel, in accordance with NEN-EN-ISO 1461
- Thickness layer 60 to 70 µm.
- Also available in stainless steel 304 or 316L.
- Powder coating according to RAL colors possible.
- All rungs are welded.
- Accessories must be supported on all sides.
- Standard angle for accessories is 90°.
- Length 6 meter.
- 3 meter length available on request.
- Other widths available on request.

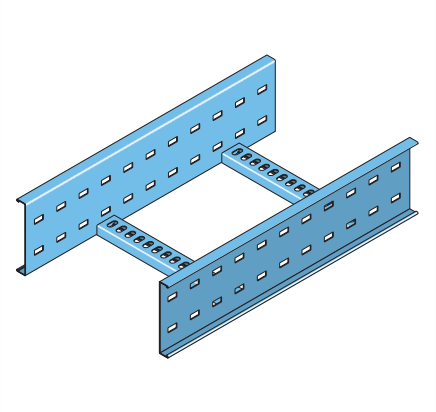

LOAD DATA

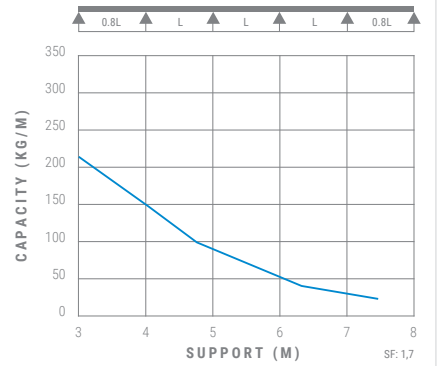

	Article number	W mm	H mm	E mm	kg/ unit
●	ECL100-100-6-HDG	100	100	1,5	26,00
●	ECL100-200-6-HDG	200	100	1,5	28,50
●	ECL100-300-6-HDG	300	100	1,5	30,00
●	ECL100-400-6-HDG	400	100	1,5	32,50
●	ECL100-500-6-HDG	500	100	1,5	35,00
●	ECL100-600-6-HDG	600	100	1,5	37,00
●	ECL100-700-6-HDG	700	100	1,5	39,50
●	ECL100-800-6-HDG	800	100	1,5	41,50
●	ECL100-900-6-HDG	900	100	1,5	44,00
●	ECL100-1000-6-HDG	1000	100	1,5	46,50

● In stock ● Limited stock ● On request

Available surface finishes	Change H to	Stock
Hot dip galvanized	-	●
Stainless steel A4 / 316L	S316	●
Stainless steel A2 / 304	S304	●



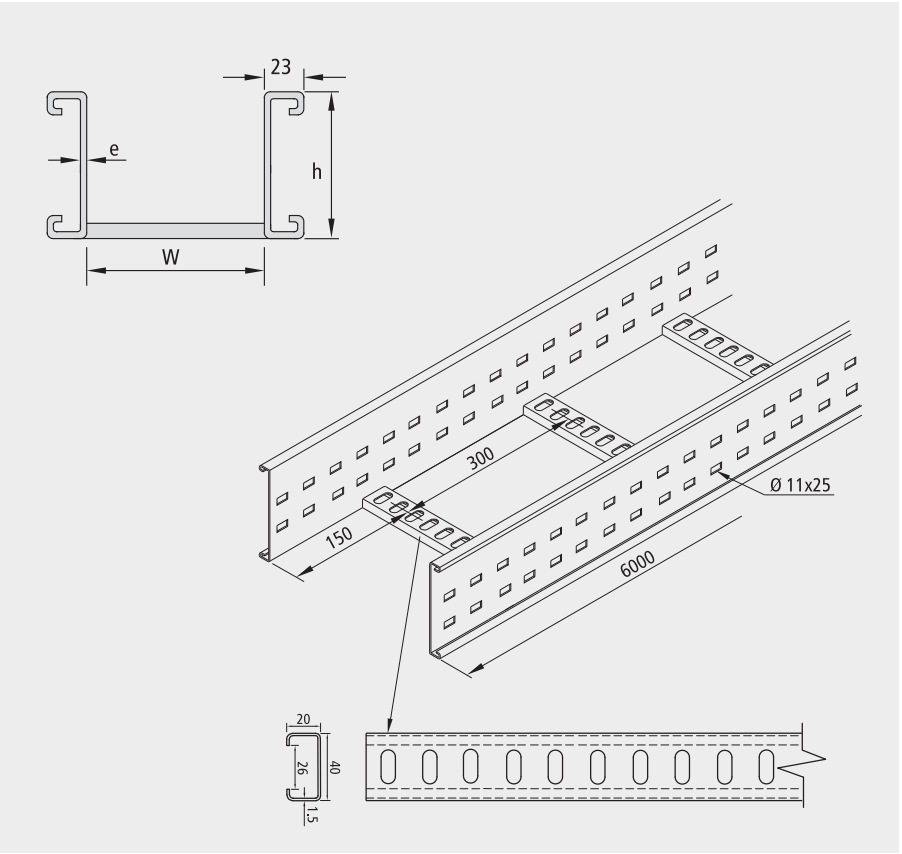

EFB100 | Eurostrut | Bend 90° for Cable Ladder ECL100

SPECIFICATIONS

- Carbon steel, standard surface finish is hot dip galvanized (HDG), in accordance with NEN-EN-ISO 1461.
- Thickness layer 60 to 70 µm.
- Also available in stainless steel 304 or 316L.
- All rungs are welded.
- Accessories must be supported on all sides.
- Standard angle for accessories is 90°.
- Other widths available on request.

INCLUDING

- 16x ESL-SB-H Fixing Set (Square Neck Bolt M10x20, Nut and Washer)

	Article number	W mm	H mm	E mm	kg/ unit
●	EFB100-100-90-300-HDG	105	94	3	6,45
●	EFB100-200-90-300-HDG	205	94	3	8,65
●	EFB100-300-90-300-HDG	305	94	3	9,80
●	EFB100-400-90-300-HDG	405	94	3	11,60
●	EFB100-500-90-300-HDG	505	94	3	13,75
●	EFB100-600-90-300-HDG	605	94	3	15,25
●	EFB100-700-90-300-HDG	705	94	3	17,85
●	EFB100-800-90-300-HDG	805	94	3	19,50
●	EFB100-900-90-300-HDG	905	94	3	22,60
●	EFB100-1000-90-300-HDG	1005	94	3	24,55

● In stock ● Limited stock ● On request

Available surface finishes	Change H to	Stock
Hot dip galvanized	-	●
Stainless steel A4 / 316L	S316	●
Stainless steel A2 / 304	S304	●

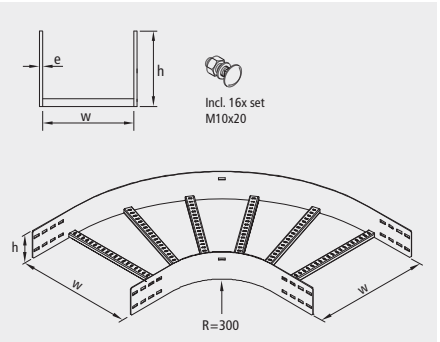

Application

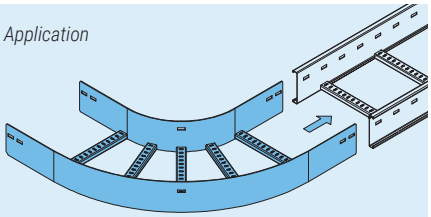

| + 31 10 522 33 51 | info@eurostrut.com | eurostrut.com

EET100 | Eurostrut | T-Piece for Cable Ladder ECL100

- Carbon steel, standard surface finish is hot dip galvanized (HDG), in accordance with NEN-EN-ISO 1461.
- Thickness layer 60 to 70 µm.
- Also available in stainless steel 304 or 316L.
- All rungs are welded.
- Accessories must be supported on all sides.
- Standard angle for accessories is 90°.
- Other widths available on request.

INCLUDING

- 24x ESL-SB-H Fixing Set (Square Neck Bolt M10x20, Nut and Washer)

	Article number	W mm	H mm	E mm	kg/ unit
●	EET100-100-300-HDG	105	94	3	9,75
●	EET100-200-300-HDG	205	94	3	11,75
●	EET100-300-300-HDG	305	94	3	13,25
●	EET100-400-300-HDG	405	94	3	15,00
●	EET100-500-300-HDG	505	94	3	16,50
●	EET100-600-300-HDG	605	94	3	19,00
●	EET100-700-300-HDG	705	94	3	25,25
●	EET100-800-300-HDG	805	94	3	27,00
●	EET100-900-300-HDG	905	94	3	30,00
●	EET100-1000-300-HDG	1005	94	3	32,50

● In stock ● Limited stock ● On request

Available surface finishes	Change H to	Stock
Hot dip galvanized	-	●
Stainless steel A4 / 316L	S316	●
Stainless steel A2 / 304	S304	●

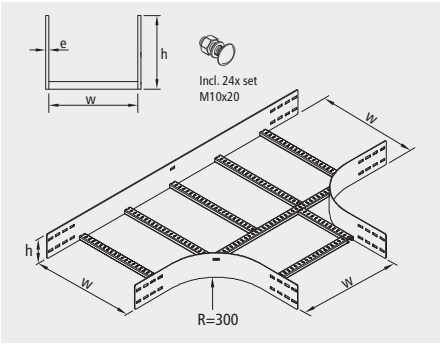

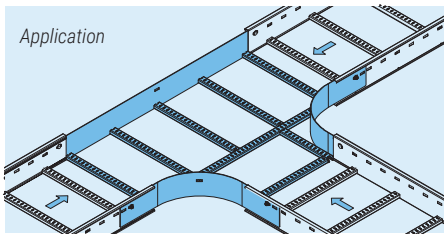

EIR100 | Eurostrut | Inside Riser 90° for Cable Ladder ECL100

SPECIFICATIONS

- Carbon steel, standard surface finish is hot dip galvanized (HDG), in accordance with NEN-EN-ISO 1461.
- Thickness layer 60 to 70 µm.
- Also available in stainless steel 304 or 316L.
- All rungs are welded.
- Accessories must be supported on all sides.
- Standard angle for accessories is 90°.
- Other widths available on request.

INCLUDING

- 16x ESL-SB-H Fixing Set (Square Neck Bolt M10x20, Nut and Washer)

	Article number	W mm	H mm	E mm	kg/ unit
●	EIR100-100-300-HDG	105	94	3	6,25
●	EIR100-200-300-HDG	205	94	3	7,00
●	EIR100-300-300-HDG	305	94	3	7,75
●	EIR100-400-300-HDG	405	94	3	8,20
●	EIR100-500-300-HDG	505	94	3	9,00
●	EIR100-600-300-HDG	605	94	3	9,50
●	EIR100-700-300-HDG	705	94	3	10,00
●	EIR100-800-300-HDG	805	94	3	10,75
●	EIR100-900-300-HDG	905	94	3	11,50
●	EIR100-1000-300-HDG	1005	94	3	12,00

● In stock ● Limited stock ● On request

Available surface finishes	Change H to	Stock
Hot dip galvanized	-	●
Stainless steel A4 / 316L	S316	●
Stainless steel A2 / 304	S304	●

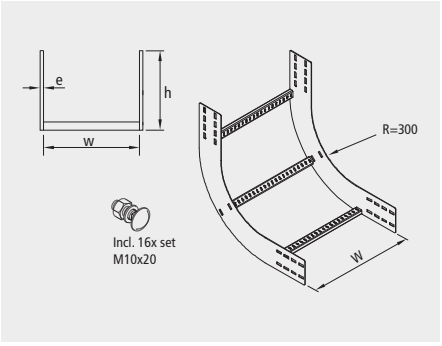

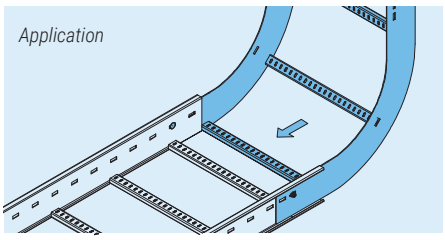

EOR100 | Eurostrut | Outside Riser 90° for Cable Ladder ECL100

SPECIFICATIONS

- Carbon steel, standard surface finish is hot dip galvanized (HDG), in accordance with NEN-EN-ISO 1461.
- Thickness layer 60 to 70 µm.
- Also available in stainless steel 304 or 316L.
- All rungs are welded.
- Accessories must be supported on all sides.
- Standard angle for accessories is 90°.

INCLUDING

- 16x ESL-SB-H Fixing Set (Square Neck Bolt M10x20, Nut and Washer)

	Article number	W mm	H mm	E mm	kg/ unit
●	EOR100-100-300-HDG	105	94	3	6,25
●	EOR100-200-300-HDG	205	94	3	7,00
●	EOR100-300-300-HDG	305	94	3	7,75
●	EOR100-400-300-HDG	405	94	3	8,20
●	EOR100-500-300-HDG	505	94	3	9,00
●	EOR100-600-300-HDG	605	94	3	9,50
●	EOR100-700-300-HDG	705	94	3	10,00
●	EOR100-800-300-HDG	805	94	3	10,75
●	EOR100-900-300-HDG	905	94	3	11,50
●	EOR100-1000-300-HDG	1005	94	3	12,00

● In stock ● Limited stock ● On request

Available surface finishes	Change H to	Stock
Hot dip galvanized	-	●
Stainless steel A4 / 316L	S316	●
Stainless steel A2 / 304	S304	●

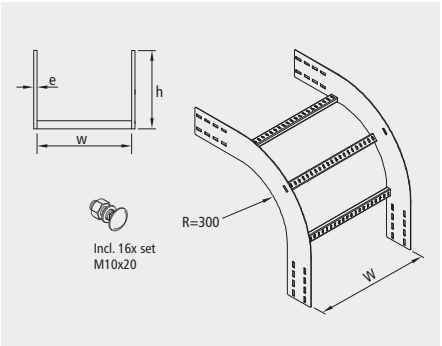

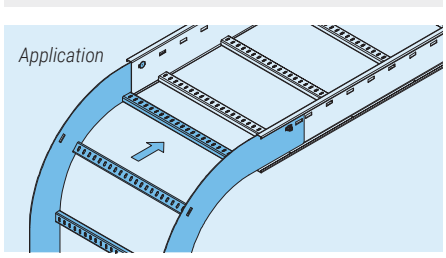

ECO100 | Eurostrut | Crossover for Cable Ladder ECL100

SPECIFICATIONS

- Standard surface finish is hot dip galvanized (HDG) carbon steel, in accordance with NEN-EN-ISO 1461
- Thickness layer 60 to 70 µm.
- Also available in stainless steel 304 or 316L.
- All rungs are welded.
- Accessories must be supported on all sides.
- Standard angle for accessories is 90°.
- Other widths available on request.

INCLUDING

- 32x ESL-SB-H Fixing Set (Square Neck Bolt M10x20, Nut and Washer)

	Article number	W mm	H mm	E mm	kg/ unit
●	ECO100-100-300-HDG	105	94	3	-
●	ECO100-200-300-HDG	205	94	3	17,75
●	ECO100-300-300-HDG	305	94	3	19,25
●	ECO100-400-300-HDG	405	94	3	20,50
●	ECO100-500-300-HDG	505	94	3	21,50
●	ECO100-600-300-HDG	605	94	3	23,50
●	ECO100-700-300-HDG	705	94	3	34,25
●	ECO100-800-300-HDG	805	94	3	36,00
●	ECO100-900-300-HDG	905	94	3	40,75
●	ECO100-1000-300-HDG	1005	94	3	41,80

● In stock ● Limited stock ● On request

Available surface finishes	Change H to	Stock
Hot dip galvanized	-	●
Stainless steel A4 / 316L	S316	●
Stainless steel A2 / 304	S304	●

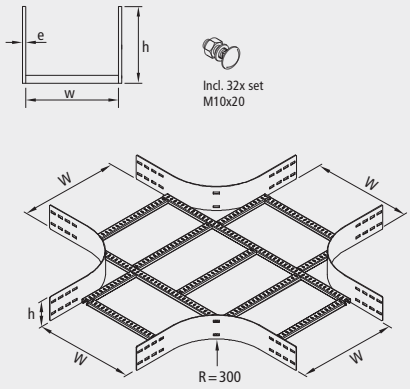



ESD100 | Eurostrut | Divider Straight for Cable Ladder ECL100

SPECIFICATIONS

- Standard surface finish is hot dip galvanized (HDG) carbon steel, in accordance with NEN-EN-ISO 1461
- Thickness layer 60 to 70 µm.
- Also available in stainless steel 304 or 316L.

INCLUDING

- 3x EFS08x15-HDG Fixing Set (Square Neck Bolt M8x15, Nut and Washer).

	Article number	L mm	H mm	B mm	E mm	kg/ unit
●	ESD100-HDG	3000	75	25	1,5	3,30

● In stock ● Limited stock ● On request

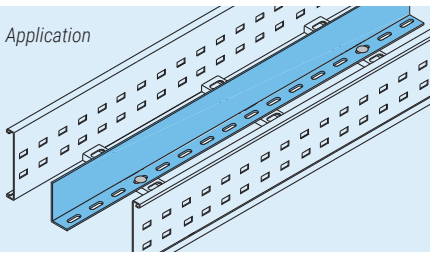

Available surface finishes	Change H to	Stock
Hot dip galvanized	-	●
Stainless steel A4 / 316L	S316	●
Stainless steel A2 / 304	S304	●

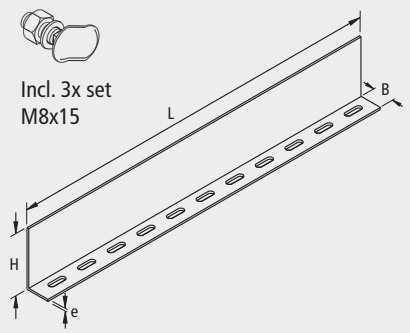

EBD100 | Eurostrut | Divider Bendable for Cable Ladder ECL100

SPECIFICATIONS

- Carbon steel, standard surface finish is hot dip galvanized (HDG), in accordance with NEN-EN-ISO 1461.
- Thickness layer 45 to 55 µm.
- Also available in stainless steel 304 or 316L.

INCLUDING

- 3x EFS08x15-HDG Fixing Set (Square Neck Bolt M8x15, Nut and Washer).

	Article number	L mm	H mm	B mm	E mm	kg/ unit
●	EBD100-HDG	1000	75	25	1,5	1,00

● In stock ● Limited stock ● On request

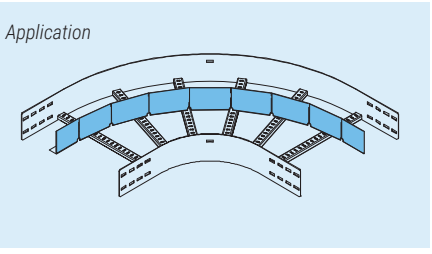

Available surface finishes	Change H to	Stock
Hot dip galvanized	-	●
Stainless steel A4 / 316L	S316	●
Stainless steel A2 / 304	S304	●

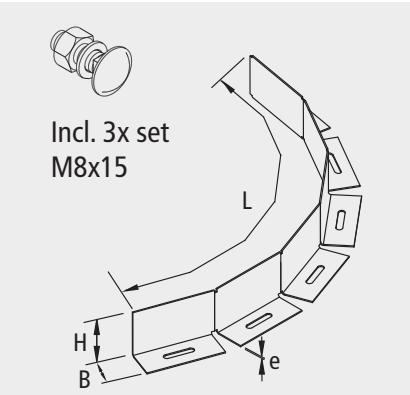

ELHR100 | Eurostrut | Left Hand Reducer for Cable Ladder ECL100

SPECIFICATIONS

- For complete set you need also an jointing piece ECP100.
- Standard surface finish is hot dip galvanized (HDG) carbon steel, in accordance with NEN-EN-ISO 1461
- Thickness layer 60 to 70 µm.
- Also available in stainless steel 304 or 316L.
- Accessories must be supported on all sides.

INCLUDING

- 8x ESL-SB-H Fixing Set (Square Neck Bolt M10x20, Nut and Washer).

Available surface finishes	Change H to	Stock
Hot dip galvanized	-	●
Stainless steel A4 / 316L	S316	●
Stainless steel A2 / 304	S304	●

Application

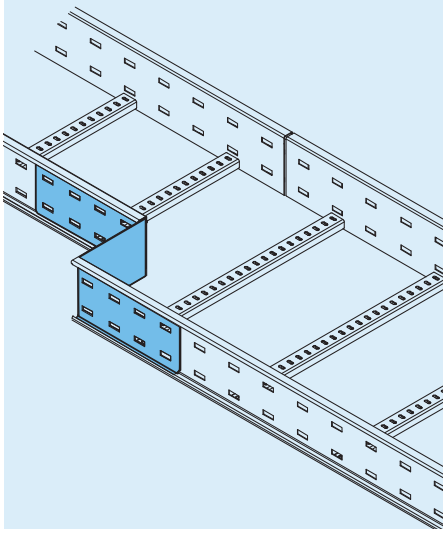

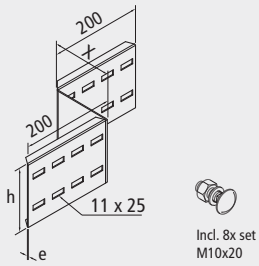

	Article number	X mm	H mm	E mm	kg/ unit
●	ELHR100-50-HDG	50	94	2	0.74
●	ELHR100-100-HDG	100	94	2	0.82
●	ELHR100-150-HDG	150	94	2	0.91
●	ELHR100-200-HDG	200	94	2	1.00
●	ELHR100-250-HDG	250	94	2	1.07
●	ELHR100-300-HDG	300	94	2	1.15

● In stock ● Limited stock ● On request

ERHR100 | Eurostrut | Right Hand Reducer for Cable Ladder ECL100

SPECIFICATIONS

- For complete set you need also an jointing piece ECP100.
- Standard surface finish is hot dip galvanized (HDG) carbon steel, in accordance with NEN-EN-ISO 1461
- Thickness layer 60 to 70 µm.
- Also available in stainless steel 304 or 316L.
- Accessories must be supported on all sides.

INCLUDING

- 8x ESL-SB-H Fixing Set (Square Neck Bolt M10x20, Nut and Washer).

Available surface finishes	Change H to	Stock
Hot dip galvanized	-	●
Stainless steel A4 / 316L	S316	●
Stainless steel A2 / 304	S304	●

Application

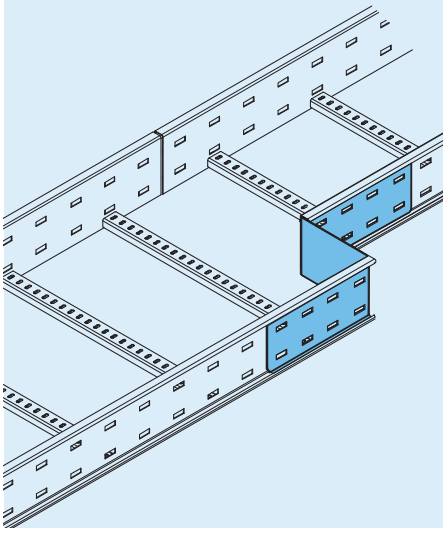

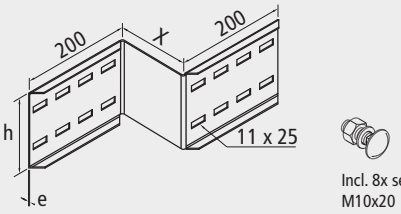

	Article number	X mm	H mm	E mm	kg/ unit
●	ERHR100-50-HDG	50	94	2	0.74
●	ERHR100-100-HDG	100	94	2	0.82
●	ERHR100-150-HDG	150	94	2	0.91
●	ERHR100-200-HDG	200	94	2	1.00
●	ERHR100-250-HDG	250	94	2	1.07
●	ERHR100-300-HDG	300	94	2	1.15

● In stock ● Limited stock ● On request

Eurostrut | Straight Reducer for Cable Ladder ECL100

NOTE

- For a straight reducer, combine a left hand reducer plate and a right hand reducer plate.
- For straight reducer combination X = width difference of ladders divided by two.

Application

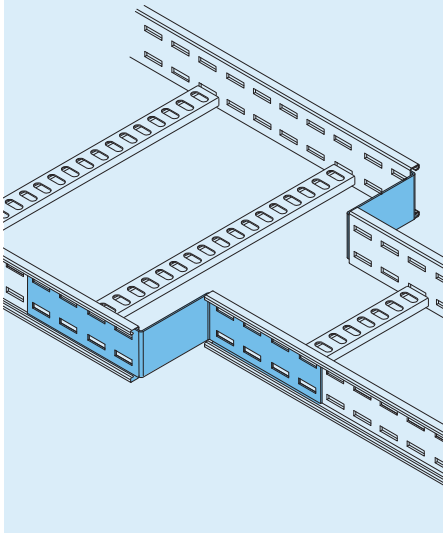

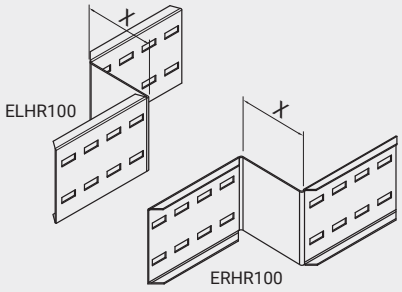

ECP100 | Eurostrut | Coupler Plate for Cable Ladder ECL100

SPECIFICATIONS

- Standard surface finish is hot dip galvanized (HDG) carbon steel, in accordance with NEN-EN-ISO 1461
- Thickness layer 60 to 70 µm.
- Also available in stainless steel 304 or 316L.

INCLUDING

- 8x ESL-SB-H Fixing Set (Square Neck Bolt M10x20, Nut and Washer).

	Article number	L mm	H mm	E mm	kg/ unit
●	ECP100-HDG	400	94	2	0,66

● In stock ● Limited stock ● On request

Available surface finishes	Change H to	Stock
Hot dip galvanized	-	●
Stainless steel A4 / 316L	S316	●
Stainless steel A2 / 304	S304	●

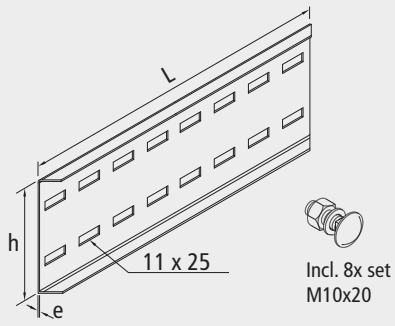

EVHCP100 | Eurostrut | Coupler Plate Vertical for Cable Ladder ECL100

SPECIFICATIONS

- Carbon steel, standard surface finish is hot dip galvanized (HDG), in accordance with NEN-EN-ISO 1461.
- Thickness layer 60 to 70 µm.
- Also available in stainless steel 304 or 316L.

INCLUDING

- 8x ESL-SB-H Fixing Set (Square Neck Bolt M10x20, Nut and Washer).

	Article number	L mm	H mm	E mm	kg/ unit
●	EVHCP100-HDG	510	94	2	0,90

● In stock ● Limited stock ● On request

Available surface finishes	Change H to	Stock
Hot dip galvanized	-	●
Stainless steel A4 / 316L	S316	●
Stainless steel A2 / 304	S304	●

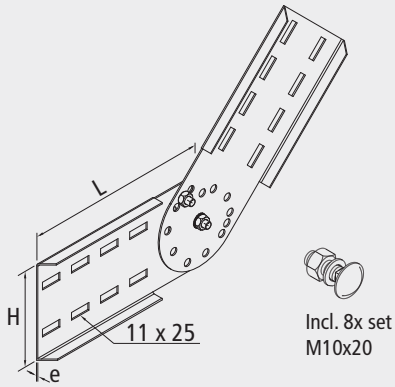

EHHCP100 | Eurostrut | Coupler Plate Horizontal for Cable Ladder ECL100

SPECIFICATIONS

- Carbon steel, standard surface finish is hot dip galvanized (HDG), in accordance with NEN-EN-ISO 1461.
- Thickness layer 60 to 70 µm.
- Also available in stainless steel 304 or 316L.

INCLUDING

- 8x ESL-SB-H Fixing Set (Square Neck Bolt M10x20, Nut and Washer).

	Article number	L mm	H mm	E mm	kg/ unit
●	EHHCP100-HDG	480	94	2	0,90

● In stock ● Limited stock ● On request

Available surface finishes	Change H to	Stock
Hot dip galvanized	-	●
Stainless steel A4 / 316L	S316	●
Stainless steel A2 / 304	S304	●

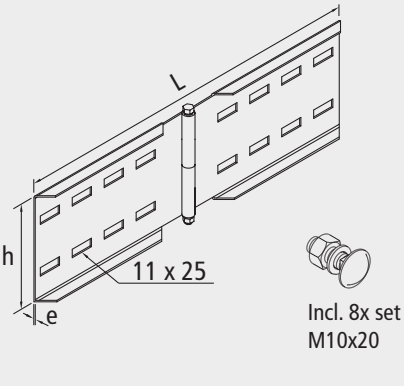

EECP100 | Eurostrut | Expansion Coupler Plate for Cable Ladder ECL100

SPECIFICATIONS

- Carbon steel, standard surface finish is hot dip galvanized (HDG), in accordance with NEN-EN-ISO 1461.
- Thickness layer 60 to 70 µm.
- Also available in stainless steel 304 or 316L.

INCLUDING

- 8x ESL-SB-H Fixing Set (Square Neck Bolt M10x20, Nut and Washer).

	Article number	L mm	H mm	E mm	kg/ unit
●	EECP100-HDG	560	94	2	1,11

● In stock ● Limited stock ● On request

Available surface finishes	Change H to	Stock
Hot dip galvanized	-	●
Stainless steel A4 / 316L	S316	●
Stainless steel A2 / 304	S304	●

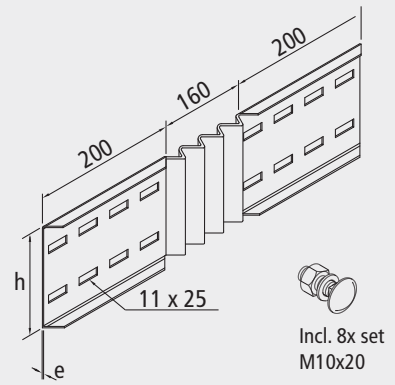

| + 31 10 522 33 51 | info@eurostrut.com | eurostrut.com

EEC100 | Eurostrut | End Connector for Cable Ladder ECL100

SPECIFICATIONS

- Carbon steel, standard surface finish is hot dip galvanized (HDG), in accordance with NEN-EN-ISO 1461.
- Thickness layer 45 to 55 µm.
- Also available in stainless steel 304 or 316L.

INCLUDING

- 4x ESL-SB-H Fixing Set (Square Neck Bolt M10x20, Nut and Washer).

	Article number	A mm	H mm	E mm	kg/ unit
●	EEC100-HDG	50	83	3	0,90

● In stock ● Limited stock ● On request

Application

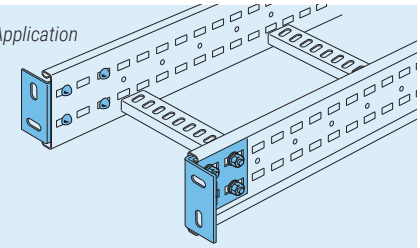

Available surface finishes	Change H to	Stock
Hot dip galvanized	-	●
Stainless steel A4 / 316L	S316	●
Stainless steel A2 / 304	S304	●

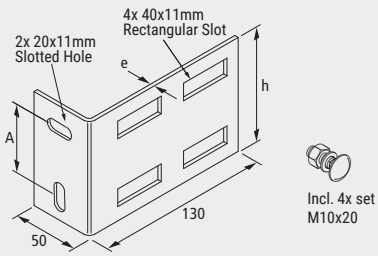

EWSB100 | Eurostrut | Wall Support Bracket for Cable Ladder ECL100

SPECIFICATIONS

- Carbon steel, standard surface finish is hot dip galvanized (HDG), in accordance with NEN-EN-ISO 1461.
- Thickness layer 60 to 70 µm.
- Also available in stainless steel 304 or 316L.

INCLUDING

- 4x ESL-SB-H Fixing Set (Square Neck Bolt M10x20, Nut and Washer).

	Article number	A mm	B mm	C mm	E mm	kg/ unit
●	EWSB100-HDG	90	25	52	3	0,50

● In stock ● Limited stock ● On request

Application

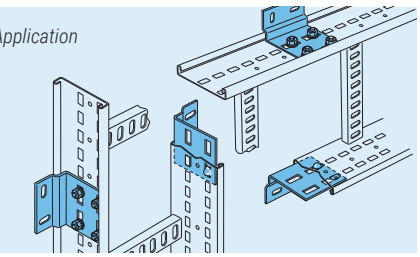

Available surface finishes	Change H to	Stock
Hot dip galvanized	-	●
Stainless steel A4 / 316L	S316	●
Stainless steel A2 / 304	S304	●

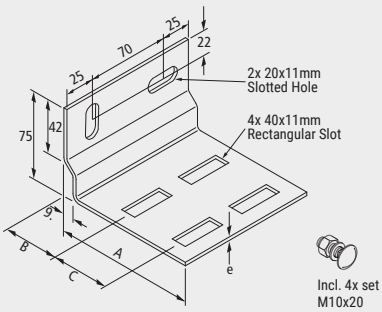

EHRB100 | Eurostrut | Hanger Rod Bracket for Cable Ladder ECL100

SPECIFICATIONS

- Carbon steel, standard surface finish is hot dip galvanized (HDG), in accordance with NEN-EN-ISO 1461.
- Thickness layer 60 to 70 µm.
- Also available in stainless steel 304 or 316L.

INCLUDING

- 4x ESL-SB-H Fixing Set (Square Neck Bolt M10x20, Nut and Washer).

	Article number	A mm	B mm	C mm	E mm	kg/ unit
●	EHRB100-HDG	105	30	52	3	0,65

● In stock ● Limited stock ● On request

Application

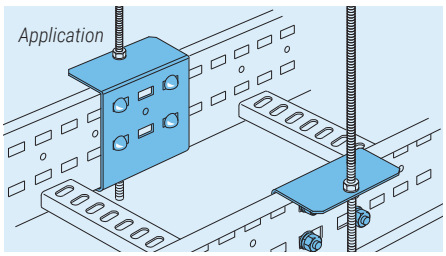

Available surface finishes	Change H to	Stock
Hot dip galvanized	-	●
Stainless steel A4 / 316L	S316	●
Stainless steel A2 / 304	S304	●

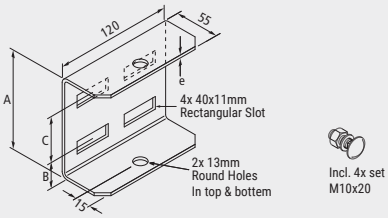

EHDC | Eurostrut | Hold Down Clip for Cable Ladder ECL

SPECIFICATIONS

- For cable ladders ECL60, ECL100 and ECL150.
- Carbon steel, standard surface finish is hot dip galvanized (HDG), in accordance with NEN-EN-ISO 1461.
- Thickness layer 60 to 70 µm.
- Also available in stainless steel 304 or 316L.

	Article number	L mm	W mm	E mm	kg/ unit
●	EHDC-HDG	70	40	3	0,07

● In stock ● Limited stock ● On request

Application

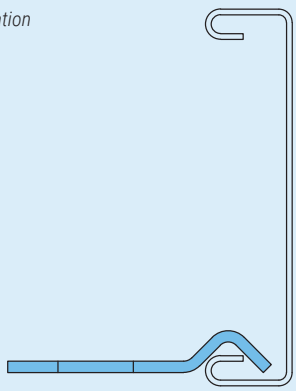

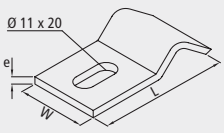

Available surface finishes	Change H to	Stock
Hot dip galvanized	-	●
Stainless steel A4 / 316L	S316	●
Stainless steel A2 / 304	S304	●

EHDB100 | Eurostrut | Hold Down Bracket for Cable Ladder ECL100

SPECIFICATIONS

- Carbon steel, standard surface finish is hot dip galvanized (HDG), in accordance with NEN-EN-ISO 1461.
- Thickness layer 45 to 55 µm.
- Also available in stainless steel 304 or 316L.

Application

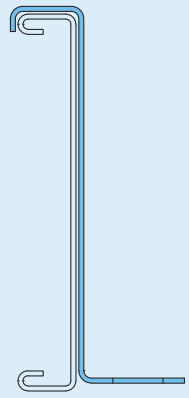

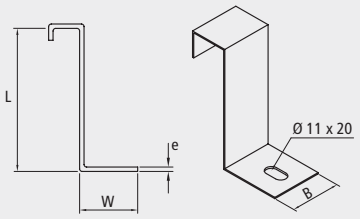

	Article number	L mm	W mm	E mm	kg/ unit
●	EHDB100-HDG	97	40	2	0,05

● In stock ● Limited stock ● On request

Available surface finishes	Change H to	Stock
Hot dip galvanized	-	●
Stainless steel A4 / 316L	S316	●
Stainless steel A2 / 304	S304	●

EEFPMB100/150 | Eurostrut | External Mounting Bracket for Cable Ladder ECL

SPECIFICATIONS

- For cable ladders ECL100 and ECL150.
- Carbon steel, standard surface finish is hot dip galvanized (HDG), in accordance with NEN-EN-ISO 1461.
- Thickness layer 60 to 70 µm.
- Also available in stainless steel 304 or 316L.

INCLUDING

- 1x ESL-SB-H Fixing Set (Square Neck Bolt M10x20, Nut and Washer).

Application

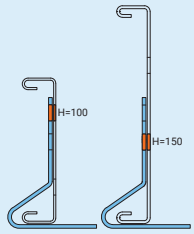

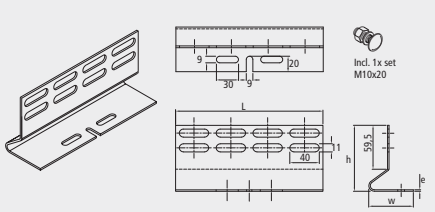

	Article number	L mm	H mm	W mm	E mm	kg/ unit
●	EEFPMB100/150-HDG	200	89,5	60,5	2,5	0,45

● In stock ● Limited stock ● On request

Available surface finishes	Change H to	Stock
Hot dip galvanized	-	●
Stainless steel A4 / 316L	S316	●
Stainless steel A2 / 304	S304	●

EIFPMB100/150 | Eurostrut | Internal Fixing Point Mounting Bracket

SPECIFICATIONS

- For cable ladders ECL100 and ECL150.
- Carbon steel, standard surface finish is hot dip galvanized (HDG), in accordance with NEN-EN-ISO 1461.
- Thickness layer 60 to 70 µm.
- Also available in stainless steel 304 or 316L.

INCLUDING

- 1x ESL-SB-H Fixing Set (Square Neck Bolt M10x20, Nut and Washer).

Application

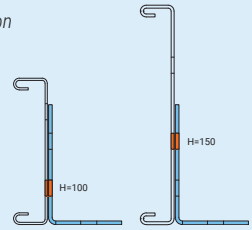

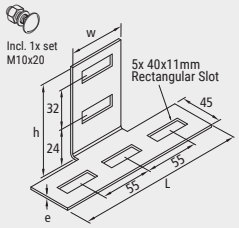

	Article number	L mm	H mm	W mm	E mm	kg/ unit
●	EIFPMB100/150-HDG	180	89,5	60	2,5	0,23

● In stock ● Limited stock ● On request

Available surface finishes	Change H to	Stock
Hot dip galvanized	-	●
Stainless steel A4 / 316L	S316	●
Stainless steel A2 / 304	S304	●

ECBMB100/150 | Eurostrut | Cable Box Mounting Bracket for Cable Ladder ECL

SPECIFICATIONS

- For cable ladders ECL100 and ECL150.
- Carbon steel, standard surface finish is hot dip galvanized (HDG), in accordance with NEN-EN-ISO 1461.
- Thickness layer 60 to 70 µm.
- Also available in stainless steel 304 or 316L.

INCLUDING

- 2x ESL-SB-H Fixing Set (Square Neck Bolt M10x20, Nut and Washer).

	Article number	L mm	W mm	E mm	kg/ unit
●	ECBMB-HDG	245	125	1,5	0,35

● In stock ● Limited stock ● On request

Available surface finishes	Change H to	Stock
Hot dip galvanized	-	●
Stainless steel A4 / 316L	S316	●
Stainless steel A2 / 304	S304	●

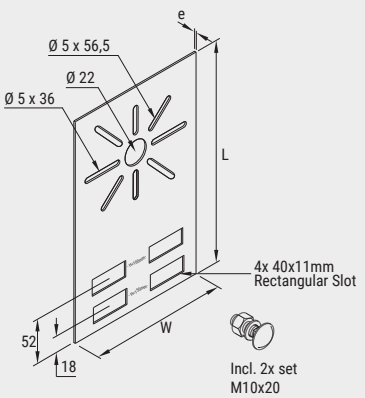

| + 31 10 522 33 51 | info@eurostrut.com | eurostrut.com

ECLSC | Eurostrut | Cover for Cable Ladder ECL

SPECIFICATIONS

- For cable ladders ECL60, ECL100 and ECL150.
- Carbon steel, standard surface finish is hot dip galvanized (HDG), in accordance with NEN-EN-ISO 1461.
- Thickness layer 60 to 70 µm.
- Also available in stainless steel 304 or 316L.
- Other widths available on request.

	Article number	W mm	H mm	E mm	kg/ unit
●	ECLSC100-HDG	150	9	1	3,96
●	ECLSC200-HDG	250	9	1	6,31
●	ECLSC300-HDG	350	9	1	8,67
●	ECLSC400-HDG	450	9	1,5	16,53
●	ECLSC500-HDG	550	9	1,5	20,06
●	ECLSC600-HDG	650	9	1,5	23,60
●	ECLSC700-HDG	750	9	2	36,17
●	ECLSC800-HDG	850	9	2	40,88
●	ECLSC900-HDG	950	9	2	45,59
●	ECLSC1000-HDG	1050	9	2	50,30

● In stock ● Limited stock ● On request

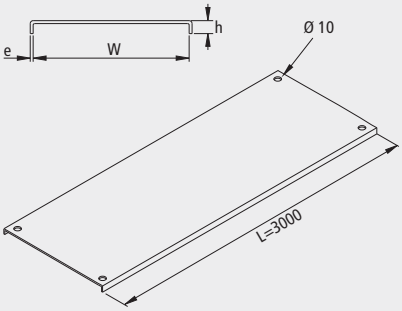

Application (with ECC)

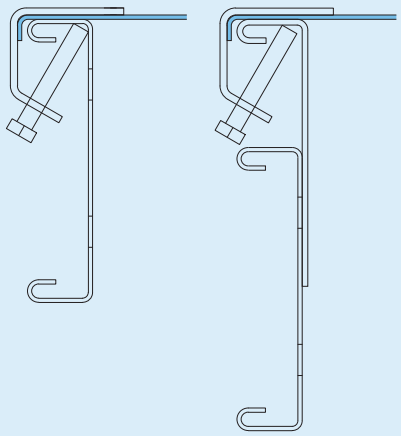

Available surface finishes	Change H to	Stock
Hot dip galvanized	-	●
Stainless steel A4 / 316L	S316	●
Stainless steel A2 / 304	S304	●

EFBC | Eurostrut | Cover Bend 90° for Cable Ladder ECL

SPECIFICATIONS

- For cable ladders ECL60, ECL100 and ECL150.
- Carbon steel, standard surface finish is hot dip galvanized (HDG), in accordance with NEN-EN-ISO 1461.
- Thickness layer 60 to 70 µm.
- Also available in stainless steel 304 or 316L
- Standard angle for accessories is 90°.
- The following angles for accessories available on request: 30°, 45° and 60°.
- Standard radius for accessories is 300 mm.
- The following radii for accessories available on request: 450 mm, 600 mm and 900 mm.
- Other widths available on request.

	Article number	W mm	H mm	E mm	kg/ unit
●	EFBC100-90-300-HDG	150	9	1	1,00
●	EFBC200-90-300-HDG	250	9	1	2,00
●	EFBC300-90-300-HDG	350	9	1	4,00
●	EFBC400-90-300-HDG	450	9	1,5	5,50
●	EFBC500-90-300-HDG	550	9	1,5	9,00
●	EFBC600-90-300-HDG	650	9	1,5	11,50
●	EFBC700-90-300-HDG	750	9	2	16,00
●	EFBC800-90-300-HDG	850	9	2	19,50
●	EFBC900-90-300-HDG	950	9	2	22,50
●	EFBC1000-90-300-HDG	1050	9	2	25,50

● In stock ● Limited stock ● On request

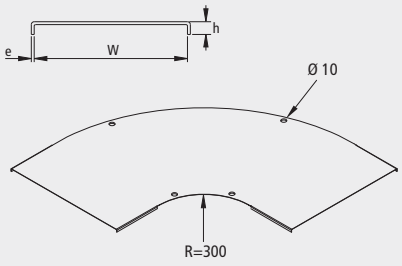

Application (with EHBCC/EVHBCC)

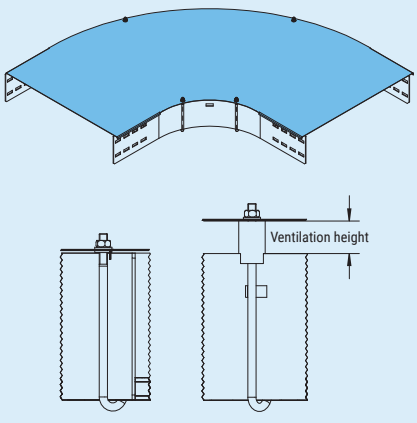

Available surface finishes	Change H to	Stock
Hot dip galvanized	-	●
Stainless steel A4 / 316L	S316	●
Stainless steel A2 / 304	S304	●

EETC | Eurostrut | Cover T-Piece for Cable Ladder ECL

SPECIFICATIONS

- For cable ladders ECL60, ECL100 and ECL150.
- Carbon steel, standard surface finish is hot dip galvanized (HDG), in accordance with NEN-EN-ISO 1461.
- Thickness layer 60 to 70 µm.
- Also available in stainless steel 304 or 316L.
- Standard angle for accessories is 90°.
- Other widths available on request.

	Article number	W mm	H mm	E mm	kg/ unit
●	EETC100-300-HDG	150	9	1	2,00
●	EETC200-300-HDG	250	9	1	4,00
●	EETC300-300-HDG	350	9	1	7,00
●	EETC400-300-HDG	450	9	1,5	9,50
●	EETC500-300-HDG	550	9	1,5	15,50
●	EETC600-300-HDG	650	9	1,5	18,50
●	EETC700-300-HDG	750	9	2	26,50
●	EETC800-300-HDG	850	9	2	31,00
●	EETC900-300-HDG	950	9	2	36,00
●	EETC1000-300-HDG	1050	9	2	41,00

● In stock ● Limited stock ● On request

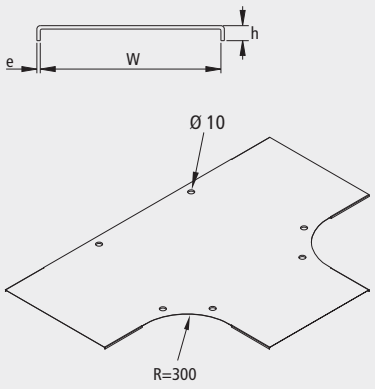

Available surface finishes	Change H to	Stock
Hot dip galvanized	-	●
Stainless steel A4 / 316L	S316	●
Stainless steel A2 / 304	S304	●

Application (with EHBCC/EVHBCC)

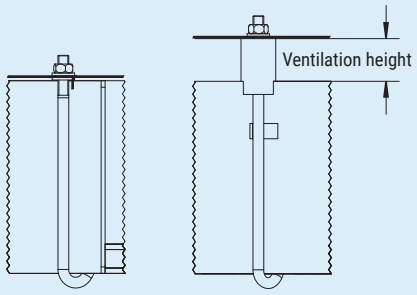

ECOC | Eurostrut | Cover Crossover for Cable Ladder ECL

SPECIFICATIONS

- For cable ladders ECL60, ECL100 and ECL150.
- Carbon steel, standard surface finish is hot dip galvanized (HDG), in accordance with NEN-EN-ISO 1461.
- Thickness layer 60 to 70 µm.
- Also available in stainless steel 304 or 316L.
- Standard angle for accessories is 90°.
- Other widths available on request.

	Article number	W mm	H mm	E mm	kg/ unit
●	ECOC100-300-HDG	150	9	1	3,00
●	ECOC200-300-HDG	250	9	1	5,00
●	ECOC300-300-HDG	350	9	1	9,50
●	ECOC400-300-HDG	450	9	1,5	14,50
●	ECOC500-300-HDG	550	9	1,5	19,50
●	ECOC600-300-HDG	650	9	1,5	24,00
●	ECOC700-300-HDG	750	9	2	34,00
●	ECOC800-300-HDG	850	9	2	39,00
●	ECOC900-300-HDG	950	9	2	45,00
●	ECOC1000-300-HDG	1050	9	2	51,00

● In stock ● Limited stock ● On request

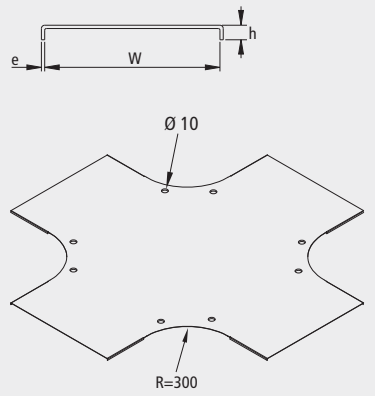

Available surface finishes	Change H to	Stock
Hot dip galvanized	-	●
Stainless steel A4 / 316L	S316	●
Stainless steel A2 / 304	S304	●

Application (with EHBCC/EVHBCC)

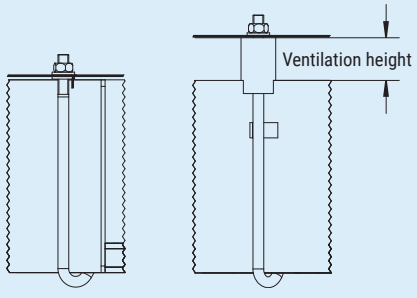

EIRC | Eurostrut | Cover Inside Riser 90° for Cable Ladder ECL

SPECIFICATIONS

- For cable ladders ECL60, ECL100 and ECL150.
- Carbon steel, standard surface finish is hot dip galvanized (HDG), in accordance with NEN-EN-ISO 1461.
- Thickness layer 60 to 70 µm.
- Also available in stainless steel 304 or 316L.
- Standard angle for accessories is 90°.
- Other widths available on request.

	Article number	W mm	H mm	E mm	kg/ unit
●	EIRC100-90-300-HDG	150	9	1	1,00
●	EIRC200-90-300-HDG	250	9	1	2,00
●	EIRC300-90-300-HDG	350	9	1	4,00
●	EIRC400-90-300-HDG	450	9	1,5	5,00
●	EIRC500-90-300-HDG	550	9	1,5	8,00
●	EIRC600-90-300-HDG	650	9	1,5	9,50
●	EIRC700-90-300-HDG	750	9	2	13,50
●	EIRC800-90-300-HDG	850	9	2	15,00
●	EIRC900-90-300-HDG	950	9	2	17,00
●	EIRC1000-90-300-HDG	1050	9	2	19,00

● In stock ● Limited stock ● On request

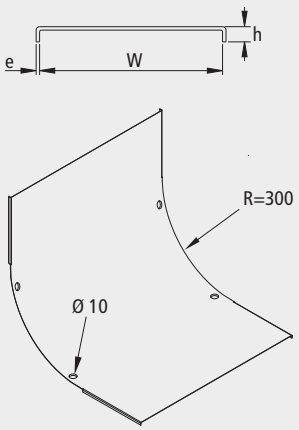

Available surface finishes	Change H to	Stock
Hot dip galvanized	-	●
Stainless steel A4 / 316L	S316	●
Stainless steel A2 / 304	S304	●

Application (with EHBCC/EVHBCC)

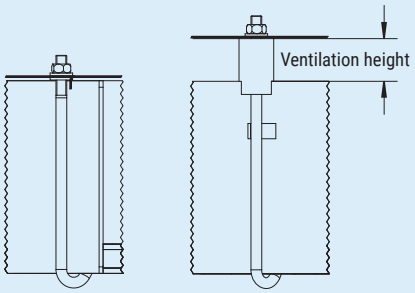

EORC | Eurostrut | Cover Outside Riser 90° for Cable Ladder ECL

SPECIFICATIONS

- For cable ladders ECL60, ECL100 and ECL150.
- Carbon steel, standard surface finish is hot dip galvanized (HDG), in accordance with NEN-EN-ISO 1461.
- Thickness layer 60 to 70 µm.
- Also available in stainless steel 304 or 316L.
- Standard angle for accessories is 90°.
- Other widths available on request.

	Article number	W mm	H mm	E mm	kg/ unit
●	EORC100-90-300-HDG	150	9	1	1,00
●	EORC200-90-300-HDG	250	9	1	2,00
●	EORC300-90-300-HDG	350	9	1	4,00
●	EORC400-90-300-HDG	450	9	1,5	5,00
●	EORC500-90-300-HDG	550	9	1,5	8,00
●	EORC600-90-300-HDG	650	9	1,5	9,50
●	EORC700-90-300-HDG	750	9	2	13,50
●	EORC800-90-300-HDG	850	9	2	15,00
●	EORC900-90-300-HDG	950	9	2	17,00
●	EORC1000-90-300-HDG	1050	9	2	19,00

● In stock ● Limited stock ● On request

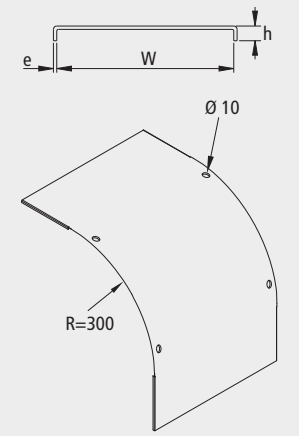

Available surface finishes	Change H to	Stock
Hot dip galvanized	-	●
Stainless steel A4 / 316L	S316	●
Stainless steel A2 / 304	S304	●

Application (with EHBCC/EVHBCC)

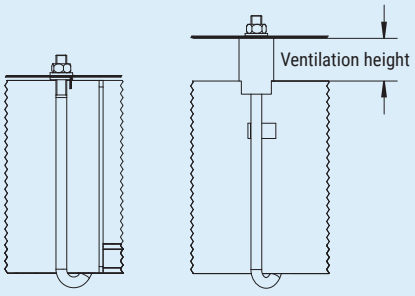

ECC | Eurostrut | Cover Clamp for Cable Ladders ECL

SPECIFICATIONS

- For cable ladders ECL60, 100 and 150.
- Carbon steel, standard surface finish is hot dip galvanized (HDG), in accordance with NEN-EN-ISO 1461.
- Thickness layer 60 to 70 µm.
- Also available in stainless steel 304 or 316L.

INCLUDING

- 1x M6x40 hex head screw

	Article number	L mm	W mm	E mm	kg/ unit
●	ECC-HDG	40	30	2,5	0,05

● In stock ● Limited stock ● On request

Application

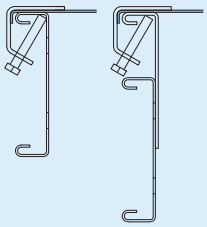

Available surface finishes	Change H to	Stock
Hot dip galvanized	-	●
Stainless steel A4 / 316L	S316	●
Stainless steel A2 / 304	S304	●

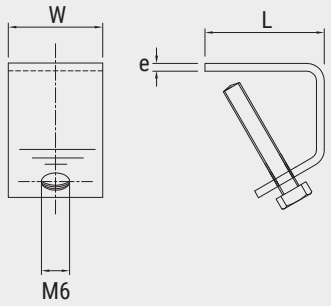

EHBCC100 | Eurostrut | Hook Bolt Cover Clamp for Cable Ladder ECL100

SPECIFICATIONS

- Carbon steel, standard surface finish is hot dip galvanized (HDG), in accordance with NEN-EN-ISO 1461.
- Thickness layer 60 to 70 µm.
- Also available in stainless steel 304 or 316L.

	Article number	L mm	Th mm	H mm	kg/ unit
●	EHBCC100-HDG	95	25	20	0,08

● In stock ● Limited stock ● On request

Application

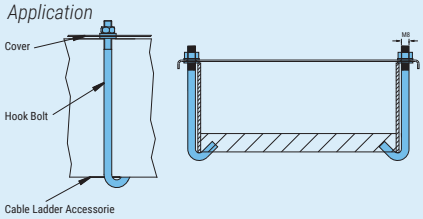

Available surface finishes	Change H to	Stock
Hot dip galvanized	-	●
Stainless steel A4 / 316L	S316	●
Stainless steel A2 / 304	S304	●

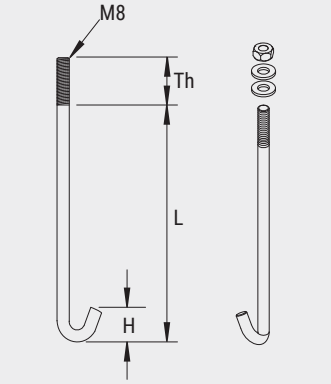

EPEC100 | Eurostrut | Protective End Cap for Cable Ladder ECL100

SPECIFICATIONS

- Material: polyvinyl chloride.
- Color: yellow RAL1021.
- Shore hardness 70°, +/-5° measured at 20°C.
- Tensile strength 15MPa.
- Suitable for temperatures between -15°C and 60°C.

	Article number	H mm	W mm	kg/ unit
●	EPEC100-PY	100	25	0,04

● In stock ● Limited stock ● On request

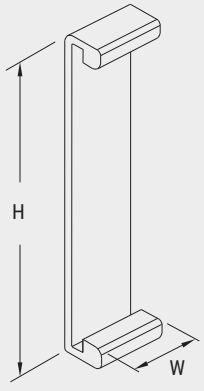

ESL-SB / EFS | Eurostrut | Fixing Set | Square Neck Bolt + Washer + Nut

SPECIFICATIONS

- Surface finish:
  - Hot dip galvanized (H)
  - Stainless steel A4 / 316L (S316)
  - Stainless steel A2 / 304 (S304)
  - Geomet® (GEO)

	Article number	MxL mm	kg/ unit
●	ESL-SB-H	M10x20	0,04
●	ESL-SB-S304	M10x20	0,04
●	ESL-SB-S316	M10x20	0,04
●	EFS06x15-304	M6x15	0,01
●	EFS06x15-316	M6x15	0,01
●	EFS06x15-GEO	M6x15	0,01
●	EFS08x15-304	M8x15	0,014
●	EFS08x15-316	M8x15	0,014
●	EFS08x15-GEO	M8x15	0,014

● In stock ● Limited stock ● On request

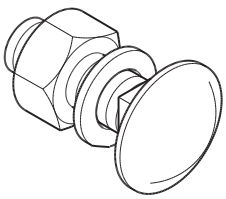

| + 31 10 522 33 51 | info@eurostrut.com | eurostrut.com

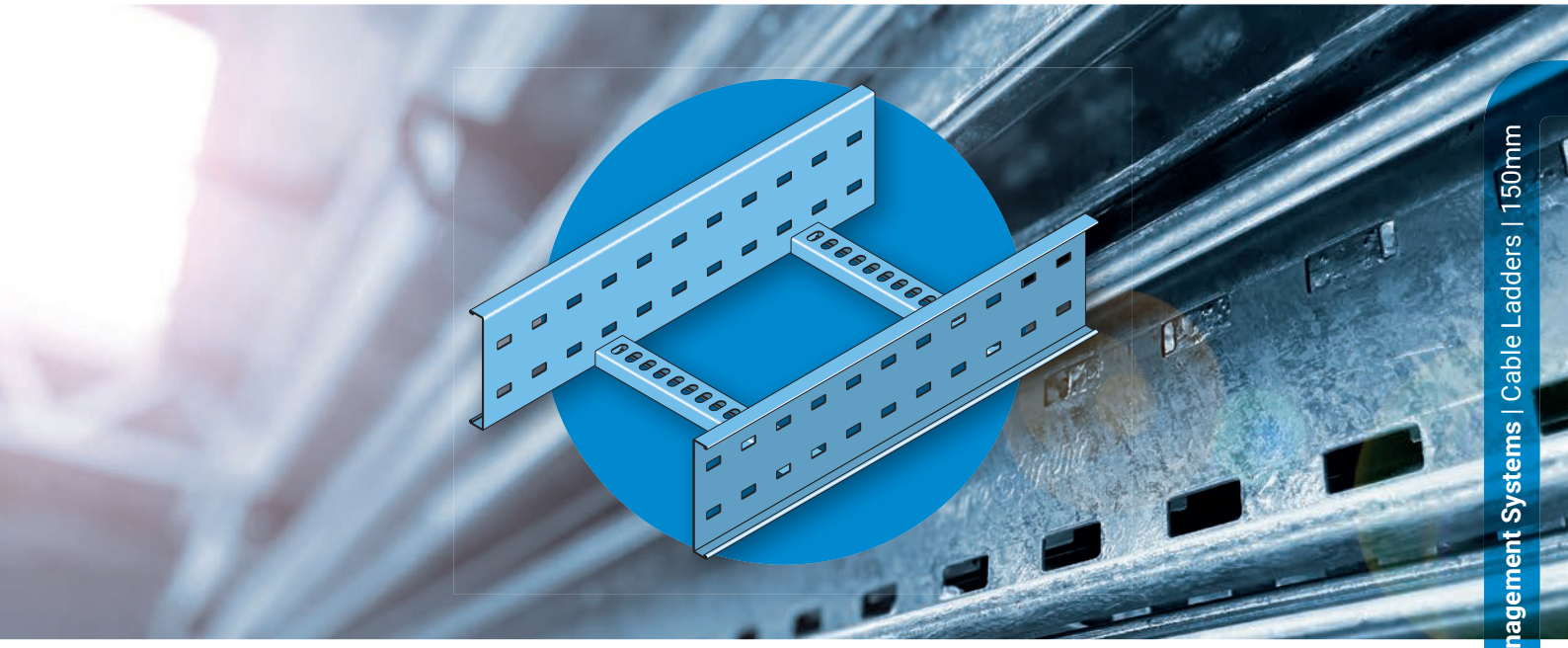

Cable Management Systems
Cable Ladders | 150mm
Heavy duty type cable ladder, increased rigidity due to welded rungs made of perforated C-profile

General specifications

- The Eurostrut cable ladder is manufactured in accordance with BS EN 61537 / IEC 61537.
- Standard material is carbon steel, standard surface finish is hot dip galvanized (HDG), in accordance with NEN-EN-ISO 1461.
- Thickness layer for ladders (and most accessories) is 60 to 70 µm.
- (On request) materials also available in stainless steel 304 or 316L.
- Powder coating according to RAL colors possible.
- All rungs are welded to the side wall of the cable ladder.
- Accessories must be supported on all sides.
- The standard heights are 60, 100 and 150 mm.
- The standard angle for accessories is 90°.
- The standard radius for accessories is 300 mm.
- Other angles and radii for accessories are available on request.
- Other widths available on request.

General conditions

- Eurostrut Support Systems & Solutions B.V. is not liable for cable ladders and accessories that are incorrectly installed or where different parts or maintenance methods are applied.
- Although the product information shown in this catalog is accurate and reliable, Eurostrut Support Systems & Solutions B.V. can not be held responsible and liable for inaccuracies.
- The performance data are specific and may be subject to variations due to normal manufacturing tolerances.
- Eurostrut Support Systems & Solutions B.V. reserves the right to change performance information or specifications at any time without notice.

2ba

The convenience of 2ba

Eurostrut's products are listed with all associated information in 2BA's central article database. Product, price and stock information must be continuously available in order to operate efficiently. The 2BA data pool offers the solution.

2ba.nl

The main advantages of 2BA:

- Design, calculate and order more efficiently because all product and price information comes from the same source.
- Data is directly available via the leading ERP software packages or your own custom system.
- You have your own net purchase prices based on Eurostrut's agreed purchasing conditions.

Eurostrut is **ISO 9001 certified**, ensuring quality management across all processes to meet customer requirements and specifications.

By achieving **step 3** certification on the **CO_2 Performance Ladder**, Eurostrut demonstrates its commitment to environmental responsibility and fostering a healthy living environment.

ECL150 | Eurostrut | Cable Ladder

SPECIFICATIONS

- Standard surface finish is hot dip galvanized (HDG) carbon steel, in accordance with NEN-EN-ISO 1461
- Thickness layer 60 to 70 µm.
- Also available in stainless steel 304 or 316L.
- Powder coating according to RAL colors possible.
- All rungs are welded.
- Accessories must be supported on all sides.
- Standard angle for accessories is 90°.
- Length 6 meter.
- 3 meter length available on request.
- Other widths available on request.

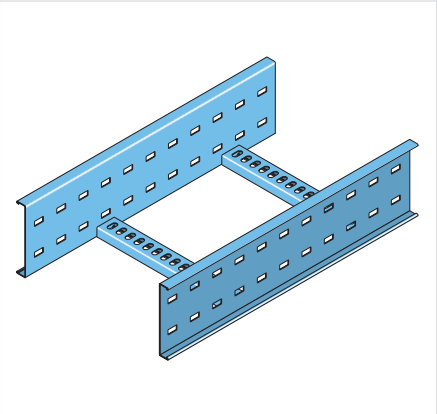

LOAD DATA

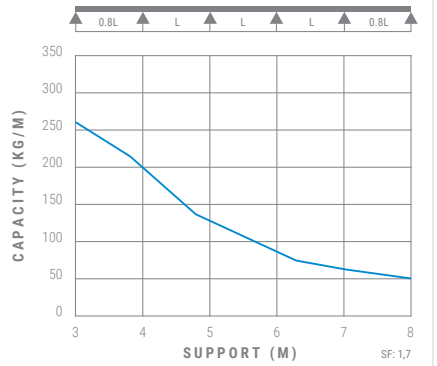

	Article number	W mm	H mm	E mm	kg/ unit
●	ECL150-100-6-HDG	100	150	2,0	41,00
●	ECL150-200-6-HDG	200	150	2,0	43,00
●	ECL150-300-6-HDG	300	150	2,0	44,00
●	ECL150-400-6-HDG	400	150	2,0	46,00
●	ECL150-500-6-HDG	500	150	2,0	48,00
●	ECL150-600-6-HDG	600	150	2,0	50,00
●	ECL150-700-6-HDG	700	150	2,0	53,00
●	ECL150-800-6-HDG	800	150	2,0	55,00
●	ECL150-900-6-HDG	900	150	2,0	58,00
●	ECL150-1000-6-HDG	1000	150	2,0	60,00

● In stock ● Limited stock ● On request

Available surface finishes	Change H to	Stock
Hot dip galvanized	-	●
Stainless steel A4 / 316L	S316	●
Stainless steel A2 / 304	S304	●



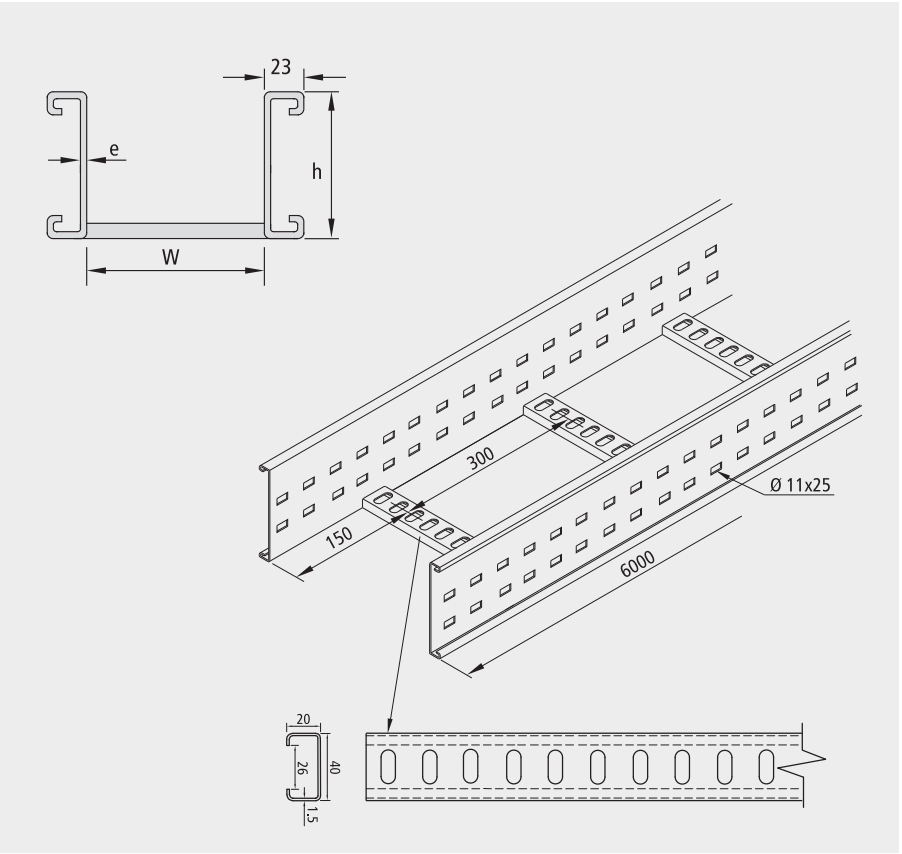

EFB150 | Eurostrut | Bend 90° for Cable Ladder ECL150

SPECIFICATIONS

- Carbon steel, standard surface finish is hot dip galvanized (HDG), in accordance with NEN-EN-ISO 1461.
- Thickness layer 60 to 70 µm.
- Also available in stainless steel 304 or 316L.
- All rungs are welded.
- Accessories must be supported on all sides.
- Standard angle for accessories is 90°.
- Other widths available on request.

INCLUDING

- 16x ESL-SB-H Fixing Set (Square Neck Bolt M10x20, Nut and Washer)

	Article number	W mm	H mm	E mm	kg/ unit
●	EFB150-100-90-300-HDG	105	142	3	10,00
●	EFB150-200-90-300-HDG	205	142	3	12,00
●	EFB150-300-90-300-HDG	305	142	3	13,50
●	EFB150-400-90-300-HDG	405	142	3	15,50
●	EFB150-500-90-300-HDG	505	142	3	17,50
●	EFB150-600-90-300-HDG	605	142	3	19,50
●	EFB150-700-90-300-HDG	705	142	3	27,25
●	EFB150-800-90-300-HDG	805	142	3	24,00
●	EFB150-900-90-300-HDG	905	142	3	29,50
●	EFB150-1000-90-300-HDG	1005	142	3	24,55

● In stock ● Limited stock ● On request

Available surface finishes	Change H to	Stock
Hot dip galvanized	-	●
Stainless steel A4 / 316L	S316	●
Stainless steel A2 / 304	S304	●

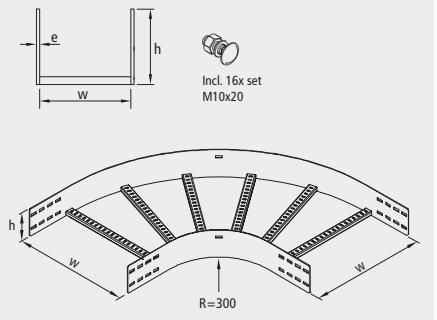

Application

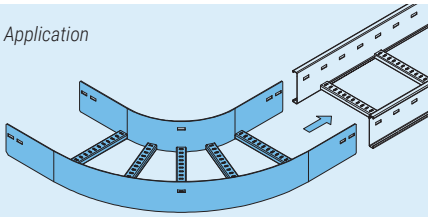

| + 31 10 522 33 51 | info@eurostrut.com | eurostrut.com

EET150 | Eurostrut | T-Piece for Cable Ladder ECL150

- Carbon steel, standard surface finish is hot dip galvanized (HDG), in accordance with NEN-EN-ISO 1461.
- Thickness layer 60 to 70 µm.
- Also available in stainless steel 304 or 316L.
- All rungs are welded.
- Accessories must be supported on all sides.
- Standard angle for accessories is 90°.
- Other widths available on request.

INCLUDING

- 24x ESL-SB-H Fixing Set (Square Neck Bolt M10x20, Nut and Washer)

	Article number	W mm	H mm	E mm	kg/ unit
●	EET150-100-300-HDG	105	142	3	13,50
●	EET150-200-300-HDG	205	142	3	15,50
●	EET150-300-300-HDG	305	142	3	17,50
●	EET150-400-300-HDG	405	142	3	19,00
●	EET150-500-300-HDG	505	142	3	21,00
●	EET150-600-300-HDG	605	142	3	23,25
●	EET150-700-300-HDG	705	142	3	31,50
●	EET150-800-300-HDG	805	142	3	33,50
●	EET150-900-300-HDG	905	142	3	36,50
●	EET150-1000-300-HDG	1005	142	3	39,00

● In stock ● Limited stock ● On request

Available surface finishes	Change H to	Stock
Hot dip galvanized	-	●
Stainless steel A4 / 316L	S316	●
Stainless steel A2 / 304	S304	●

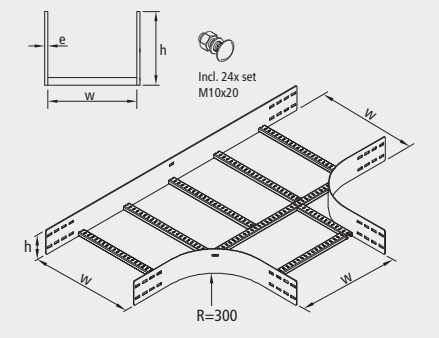

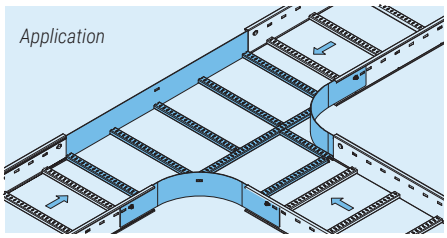

EIR150 | Eurostrut | Inside Riser 90° for Cable Ladder ECL150

SPECIFICATIONS

- Carbon steel, standard surface finish is hot dip galvanized (HDG), in accordance with NEN-EN-ISO 1461.
- Thickness layer 60 to 70 µm.
- Also available in stainless steel 304 or 316L.
- All rungs are welded.
- Accessories must be supported on all sides.
- Standard angle for accessories is 90°.
- Other widths available on request.

INCLUDING

- 16x ESL-SB-H Fixing Set (Square Neck Bolt M10x20, Nut and Washer)

	Article number	W mm	H mm	E mm	kg/ unit
●	EIR150-100-300-HDG	105	142	3	9,50
●	EIR150-200-300-HDG	205	142	3	10,50
●	EIR150-300-300-HDG	305	142	3	11,00
●	EIR150-400-300-HDG	405	142	3	12,50
●	EIR150-500-300-HDG	505	142	3	13,50
●	EIR150-600-300-HDG	605	142	3	14,25
●	EIR150-700-300-HDG	705	142	3	15,00
●	EIR150-800-300-HDG	805	142	3	16,00
●	EIR150-900-300-HDG	905	142	3	16,50
●	EIR150-1000-300-HDG	1005	142	3	17,25

● In stock ● Limited stock ● On request

Available surface finishes	Change H to	Stock
Hot dip galvanized	-	●
Stainless steel A4 / 316L	S316	●
Stainless steel A2 / 304	S304	●

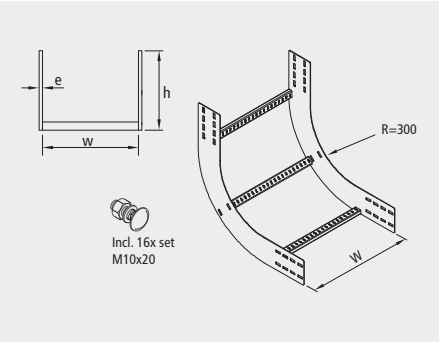

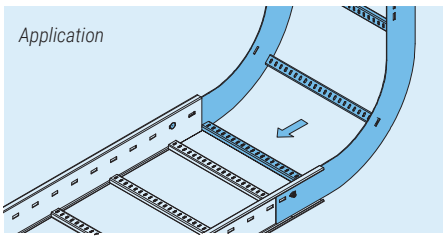

EOR150 | Eurostrut | Outside Riser 90° for Cable Ladder ECL150

SPECIFICATIONS

- Carbon steel, standard surface finish is hot dip galvanized (HDG), in accordance with NEN-EN-ISO 1461.
- Thickness layer 60 to 70 µm.
- Also available in stainless steel 304 or 316L.
- All rungs are welded.
- Accessories must be supported on all sides.
- Standard angle for accessories is 90°.
- Other widths available on request.

INCLUDING

- 16x ESL-SB-H Fixing Set (Square Neck Bolt M10x20, Nut and Washer)

	Article number	W mm	H mm	E mm	kg/ unit
●	EOR150-100-300-HDG	105	142	3	-
●	EOR150-200-300-HDG	205	142	3	10,75
●	EOR150-300-300-HDG	305	142	3	11,25
●	EOR150-400-300-HDG	405	142	3	12,00
●	EOR150-500-300-HDG	505	142	3	12,50
●	EOR150-600-300-HDG	605	142	3	13,25
●	EOR150-700-300-HDG	705	142	3	13,75
●	EOR150-800-300-HDG	805	142	3	14,50
●	EOR150-900-300-HDG	905	142	3	15,25
●	EOR150-1000-300-HDG	1005	142	3	15,75

● In stock ● Limited stock ● On request

Available surface finishes	Change H to	Stock
Hot dip galvanized	-	●
Stainless steel A4 / 316L	S316	●
Stainless steel A2 / 304	S304	●

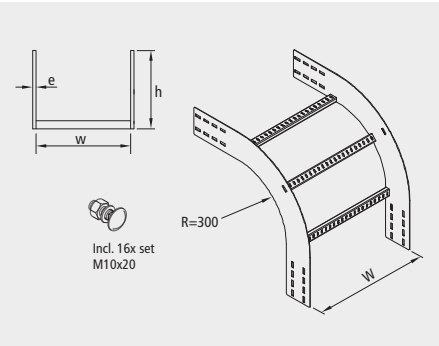

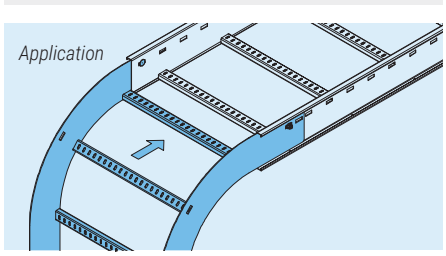

ECO150 | Eurostrut | Crossover for Cable Ladder ECL150

SPECIFICATIONS

- Standard surface finish is hot dip galvanized (HDG) carbon steel, in accordance with NEN-EN-ISO 1461
- Thickness layer 60 to 70 µm.
- Also available in stainless steel 304 or 316L.
- All rungs are welded.
- Accessories must be supported on all sides.
- Standard angle for accessories is 90°.
- Other widths available on request.

INCLUDING

- 32x ESL-SB-H Fixing Set (Square Neck Bolt M10x20, Nut and Washer)

	Article number	W mm	H mm	E mm	kg/ unit
●	ECO150-100-300-HDG	105	142	3	-
●	ECO150-200-300-HDG	205	142	3	26,75
●	ECO150-300-300-HDG	305	142	3	28,75
●	ECO150-400-300-HDG	405	142	3	30,50
●	ECO150-500-300-HDG	505	142	3	32,25
●	ECO150-600-300-HDG	605	142	3	34,75
●	ECO150-700-300-HDG	705	142	3	41,50
●	ECO150-800-300-HDG	805	142	3	43,75
●	ECO150-900-300-HDG	905	142	3	47,50
●	ECO150-1000-300-HDG	1005	142	3	49,75

● In stock ● Limited stock ● On request

Available surface finishes	Change H to	Stock
Hot dip galvanized	-	●
Stainless steel A4 / 316L	S316	●
Stainless steel A2 / 304	S304	●

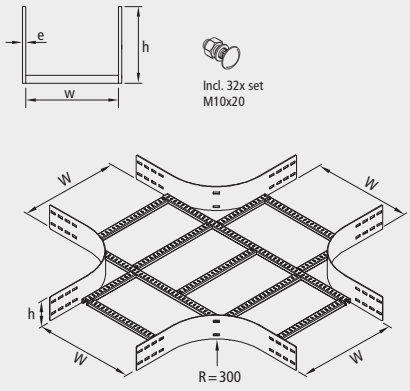

Your total supplier of Cable Management Systems & Solutions

Visit **eurostrut.com** for our complete range

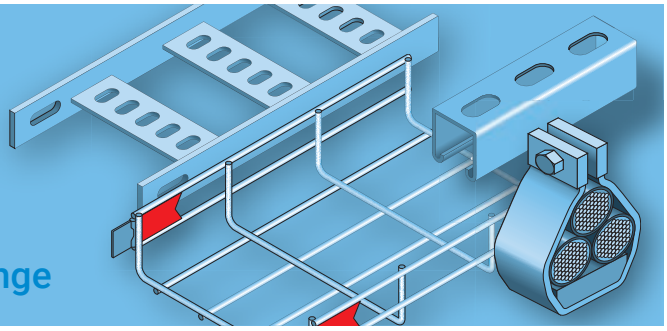

ESD150 | Eurostrut | Divider Straight for Cable Ladder ECL150

SPECIFICATIONS

- Standard surface finish is hot dip galvanized (HDG) carbon steel, in accordance with NEN-EN-ISO 1461
- Thickness layer 60 to 70 µm.
- Also available in stainless steel 304 or 316L.

INCLUDING

- 3x EFS08x15-HDG Fixing Set (Square Neck Bolt M8x15, Nut and Washer).

	Article number	L mm	H mm	B mm	E mm	kg/ unit
●	ESD150-HDG	3000	120	25	1,5	3,30

● In stock ● Limited stock ● On request

Application

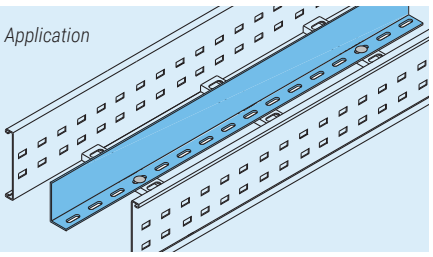

Available surface finishes	Change H to	Stock
Hot dip galvanized	-	●
Stainless steel A4 / 316L	S316	●
Stainless steel A2 / 304	S304	●

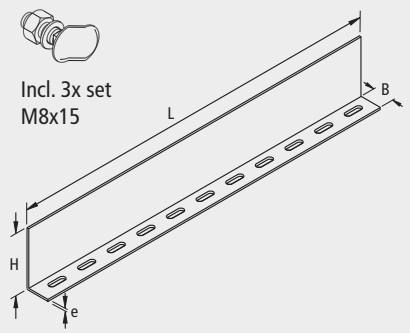

EBD150 | Eurostrut | Divider Bendable for Cable Ladder ECL150

SPECIFICATIONS

- Carbon steel, standard surface finish is hot dip galvanized (HDG), in accordance with NEN-EN-ISO 1461.
- Thickness layer 45 to 55 µm.
- Also available in stainless steel 304 or 316L.

INCLUDING

- 3x EFS08x15-HDG Fixing Set (Square Neck Bolt M8x15, Nut and Washer).

	Article number	L mm	H mm	B mm	E mm	kg/ unit
●	EBD150-HDG	1000	120	25	1,5	1,00

● In stock ● Limited stock ● On request

Application

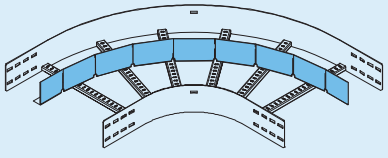

Available surface finishes	Change H to	Stock
Hot dip galvanized	-	●
Stainless steel A4 / 316L	S316	●
Stainless steel A2 / 304	S304	●

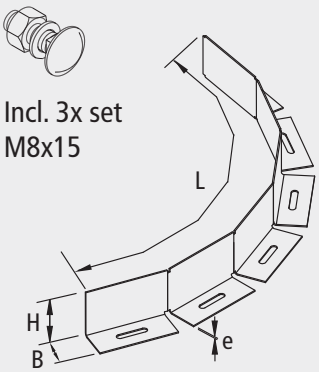

| + 31 10 522 33 51 | info@eurostrut.com | eurostrut.com

ELHR150 | Eurostrut | Left Hand Reducer for Cable Ladder ECL150

SPECIFICATIONS

- For complete set you need also an jointing piece ECP150.
- Standard surface finish is hot dip galvanized (HDG) carbon steel, in accordance with NEN-EN-ISO 1461
- Thickness layer 60 to 70 µm.
- Also available in stainless steel 304 or 316L.
- Accessories must be supported on all sides.

INCLUDING

- 8x ESL-SB-H Fixing Set (Square Neck Bolt M10x20, Nut and Washer).

Available surface finishes	Change H to	Stock
Hot dip galvanized	-	●
Stainless steel A4 / 316L	S316	●
Stainless steel A2 / 304	S304	●

Application

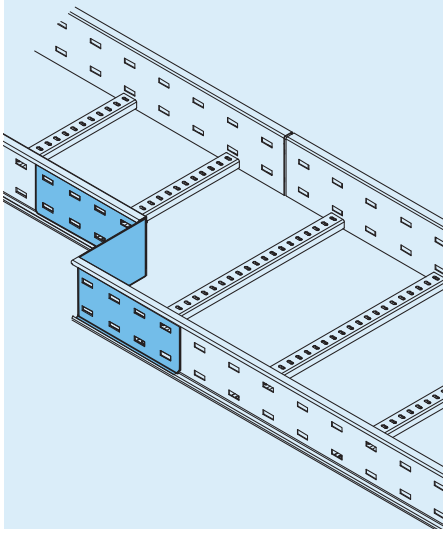

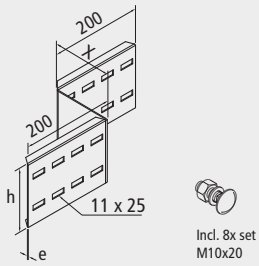

Article number	X mm	H mm	E mm	kg/ unit
● ELHR150-50-HDG	50	142	2	1,65
● ELHR150-100-HDG	100	142	2	1,95
● ELHR150-150-HDG	150	142	2	2,15
● ELHR150-200-HDG	200	142	2	2,30
● ELHR150-250-HDG	250	142	2	2,55
● ELHR150-300-HDG	300	142	2	2,75

● In stock ● Limited stock ● On request

ERHR150 | Eurostrut | Right Hand Reducer for Cable Ladder ECL150

SPECIFICATIONS

- For complete set you need also an jointing piece ECP150.
- Standard surface finish is hot dip galvanized (HDG) carbon steel, in accordance with NEN-EN-ISO 1461
- Thickness layer 60 to 70 µm.
- Also available in stainless steel 304 or 316L.
- Accessories must be supported on all sides.

INCLUDING

- 8x ESL-SB-H Fixing Set (Square Neck Bolt M10x20, Nut and Washer).

Available surface finishes	Change H to	Stock
Hot dip galvanized	-	●
Stainless steel A4 / 316L	S316	●
Stainless steel A2 / 304	S304	●

Application

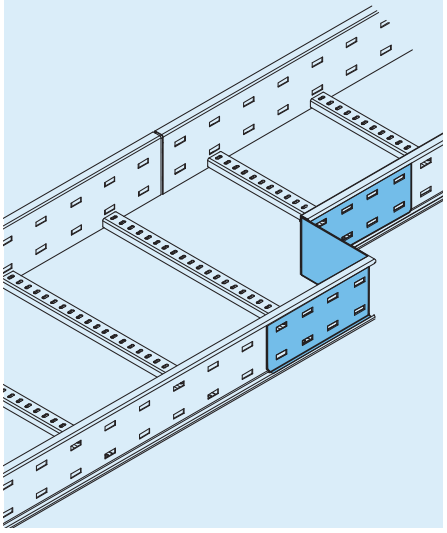

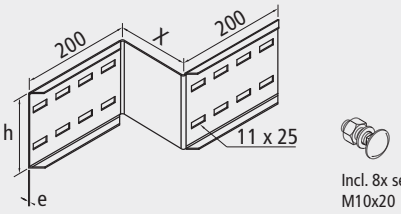

Article number	X mm	H mm	E mm	kg/ unit
● ERHR150-50-HDG	50	142	2	1,65
● ERHR150-100-HDG	100	142	2	1,95
● ERHR150-150-HDG	150	142	2	2,15
● ERHR150-200-HDG	200	142	2	2,30
● ERHR150-250-HDG	250	142	2	2,55
● ERHR150-300-HDG	300	142	2	2,75

● In stock ● Limited stock ● On request

Eurostrut | Straight Reducer for Cable Ladder ECL150

NOTE

- For a straight reducer, combine a left hand reducer plate and a right hand reducer plate.
- For straight reducer combination X = width difference of ladders divided by two.

Application

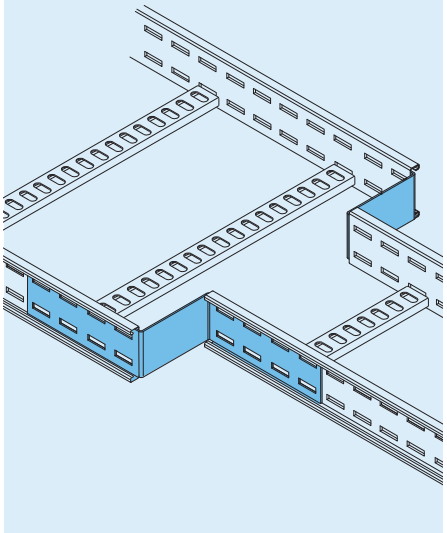

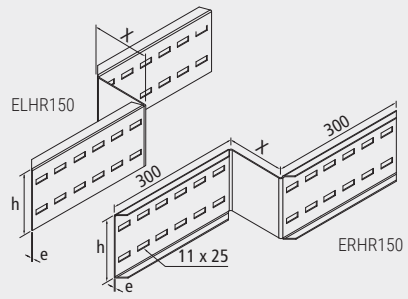

ECP150 | Eurostrut | Coupler Plate for Cable Ladder ECL150

SPECIFICATIONS

- Standard surface finish is hot dip galvanized (HDG) carbon steel, in accordance with NEN-EN-ISO 1461
- Thickness layer 60 to 70 µm.
- Also available in stainless steel 304 or 316L.

INCLUDING

- 8x ESL-SB-H Fixing Set (Square Neck Bolt M10x20, Nut and Washer).

	Article number	L mm	H mm	E mm	kg/ unit
●	ECP150-HDG	600	142	2	1,80

● In stock ● Limited stock ● On request

Available surface finishes	Change H to	Stock
Hot dip galvanized	-	●
Stainless steel A4 / 316L	S316	●
Stainless steel A2 / 304	S304	●

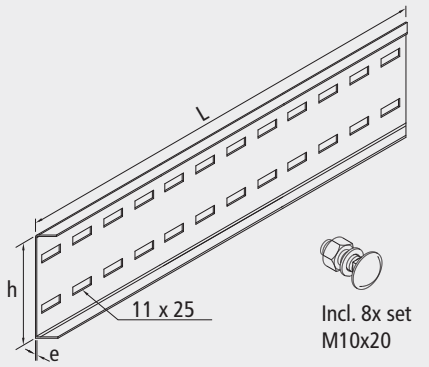

EVHCP150 | Eurostrut | Coupler Plate Vertical for Cable Ladder ECL150

SPECIFICATIONS

- Carbon steel, standard surface finish is hot dip galvanized (HDG), in accordance with NEN-EN-ISO 1461.
- Thickness layer 60 to 70 µm.
- Also available in stainless steel 304 or 316L.

INCLUDING

- 8x ESL-SB-H Fixing Set (Square Neck Bolt M10x20, Nut and Washer).

	Article number	L mm	H mm	E mm	kg/ unit
●	EVHCP150-HDG	710	142	2	2,75

● In stock ● Limited stock ● On request

Available surface finishes	Change H to	Stock
Hot dip galvanized	-	●
Stainless steel A4 / 316L	S316	●
Stainless steel A2 / 304	S304	●

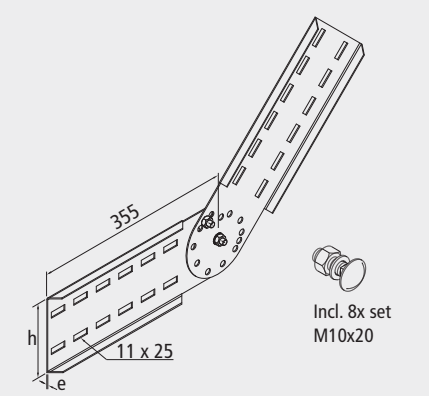

EHHCP150 | Eurostrut | Coupler Plate Horizontal for Cable Ladder ECL150

SPECIFICATIONS

- Carbon steel, standard surface finish is hot dip galvanized (HDG), in accordance with NEN-EN-ISO 1461.
- Thickness layer 60 to 70 µm.
- Also available in stainless steel 304 or 316L.

INCLUDING

- 8x ESL-SB-H Fixing Set (Square Neck Bolt M10x20, Nut and Washer).

	Article number	L mm	H mm	E mm	kg/ unit
●	EHHCP150-HDG	680	142	2	2,75

● In stock ● Limited stock ● On request

Available surface finishes	Change H to	Stock
Hot dip galvanized	-	●
Stainless steel A4 / 316L	S316	●
Stainless steel A2 / 304	S304	●

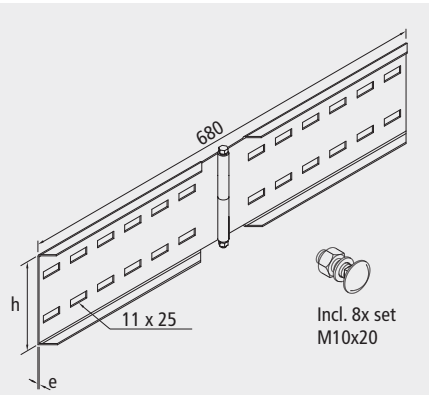

EECP150 | Eurostrut | Expansion Coupler Plate for Cable Ladder ECL150

SPECIFICATIONS

- Carbon steel, standard surface finish is hot dip galvanized (HDG), in accordance with NEN-EN-ISO 1461.
- Thickness layer 60 to 70 µm.
- Also available in stainless steel 304 or 316L.

INCLUDING

- 8x ESL-SB-H Fixing Set (Square Neck Bolt M10x20, Nut and Washer).

	Article number	L mm	H mm	E mm	kg/ unit
●	EECP150-HDG	760	142	2	2,75

● In stock ● Limited stock ● On request

Available surface finishes	Change H to	Stock
Hot dip galvanized	-	●
Stainless steel A4 / 316L	S316	●
Stainless steel A2 / 304	S304	●

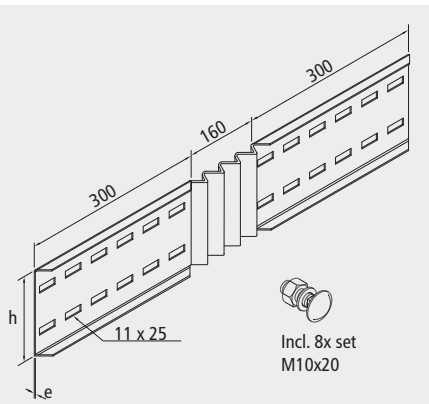

EEC150 | Eurostrut | End Connector for Cable Ladder ECL150

SPECIFICATIONS

- Carbon steel, standard surface finish is hot dip galvanized (HDG), in accordance with NEN-EN-ISO 1461.
- Thickness layer 45 to 55 µm.
- Also available in stainless steel 304 or 316L.

INCLUDING

- 4x ESL-SB-H Fixing Set (Square Neck Bolt M10x20, Nut and Washer).

	Article number	A mm	H mm	E mm	kg/ unit
●	EEC150-HDG	75	114	3	0,50

● In stock ● Limited stock ● On request

Application

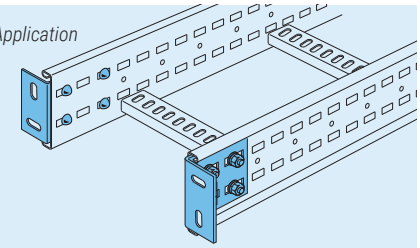

Available surface finishes	Change H to	Stock
Hot dip galvanized	-	●
Stainless steel A4 / 316L	S316	●
Stainless steel A2 / 304	S304	●

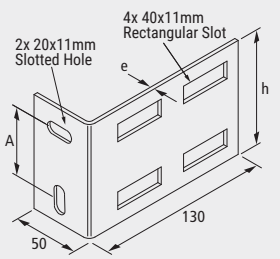

EWSB150 | Eurostrut | Wall Support Bracket for Cable Ladder ECL150

SPECIFICATIONS

- Carbon steel, standard surface finish is hot dip galvanized (HDG), in accordance with NEN-EN-ISO 1461.
- Thickness layer 60 to 70 µm.
- Also available in stainless steel 304 or 316L.

INCLUDING

- 4x ESL-SB-H Fixing Set (Square Neck Bolt M10x20, Nut and Washer).

	Article number	A mm	B mm	C mm	E mm	kg/ unit
●	EWSB150-HDG		57	52	3	0,35

● In stock ● Limited stock ● On request

Application

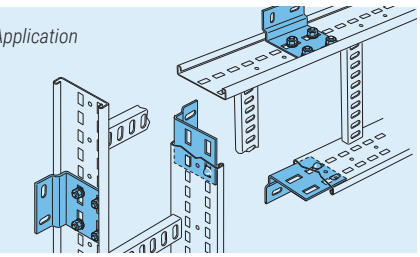

Available surface finishes	Change H to	Stock
Hot dip galvanized	-	●
Stainless steel A4 / 316L	S316	●
Stainless steel A2 / 304	S304	●

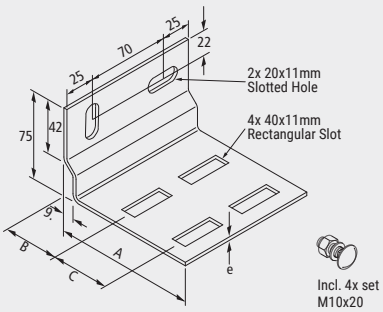

EHRB150 | Eurostrut | Hanger Rod Bracket for Cable Ladder ECL150

SPECIFICATIONS

- Carbon steel, standard surface finish is hot dip galvanized (HDG), in accordance with NEN-EN-ISO 1461.
- Thickness layer 60 to 70 µm.
- Also available in stainless steel 304 or 316L.

INCLUDING

- 4x ESL-SB-H Fixing Set (Square Neck Bolt M10x20, Nut and Washer).

	Article number	A mm	B mm	C mm	E mm	kg/ unit
●	EHRB150-HDG		61	52	3	0,70

● In stock ● Limited stock ● On request

Application

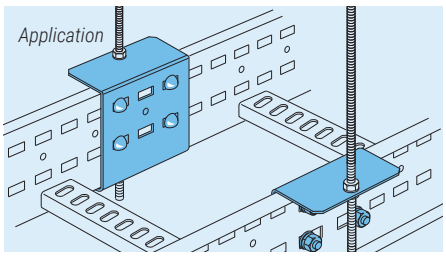

Available surface finishes	Change H to	Stock
Hot dip galvanized	-	●
Stainless steel A4 / 316L	S316	●
Stainless steel A2 / 304	S304	●

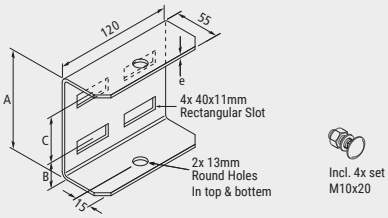

EHDC | Eurostrut | Hold Down Clip for Cable Ladder ECL

SPECIFICATIONS

- For cable ladders ECL60, ECL100 and ECL150.
- Carbon steel, standard surface finish is hot dip galvanized (HDG), in accordance with NEN-EN-ISO 1461.
- Thickness layer 60 to 70 µm.
- Also available in stainless steel 304 or 316L.

	Article number	L mm	W mm	E mm	kg/ unit
●	EHDC-HDG	70	40	3	0,07

● In stock ● Limited stock ● On request

Application

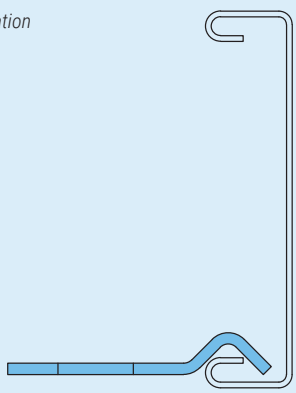

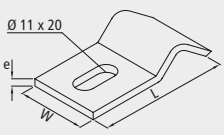

Available surface finishes	Change H to	Stock
Hot dip galvanized	-	●
Stainless steel A4 / 316L	S316	●
Stainless steel A2 / 304	S304	●

EHDB150 | Eurostrut | Hold Down Bracket for Cable Ladder ECL150

SPECIFICATIONS

- Carbon steel, standard surface finish is hot dip galvanized (HDG), in accordance with NEN-EN-ISO 1461.
- Thickness layer 45 to 55 µm.
- Also available in stainless steel 304 or 316L.

Application

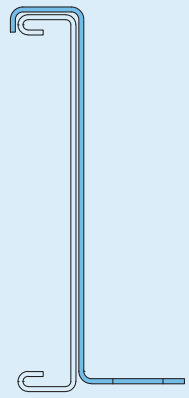

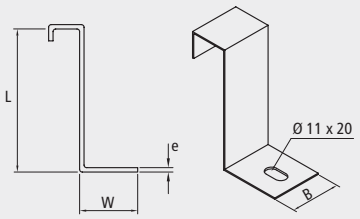

	Article number	L mm	W mm	E mm	kg/ unit
●	EHDB150-HDG	148	40	2	0,07

● In stock ● Limited stock ● On request

Available surface finishes	Change H to	Stock
Hot dip galvanized	-	●
Stainless steel A4 / 316L	S316	●
Stainless steel A2 / 304	S304	●

EEFPMB100/150 | Eurostrut | External Mounting Bracket for Cable Ladder ECL

SPECIFICATIONS

- For cable ladders ECL100 and ECL150.
- Carbon steel, standard surface finish is hot dip galvanized (HDG), in accordance with NEN-EN-ISO 1461.
- Thickness layer 60 to 70 µm.
- Also available in stainless steel 304 or 316L.

INCLUDING

- 1x ESL-SB-H Fixing Set (Square Neck Bolt M10x20, Nut and Washer).

Application

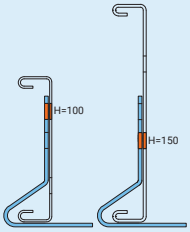

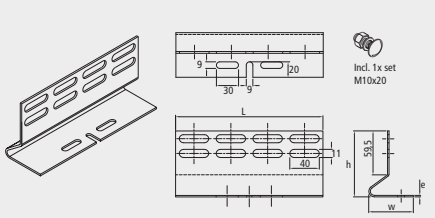

	Article number	L mm	H mm	W mm	E mm	kg/ unit
●	EEFPMB100/150-HDG	200	89,5	60,5	2,5	0,45

● In stock ● Limited stock ● On request

Available surface finishes	Change H to	Stock
Hot dip galvanized	-	●
Stainless steel A4 / 316L	S316	●
Stainless steel A2 / 304	S304	●

EIFPMB100/150 | Eurostrut | Internal Fixing Point Mounting Bracket

SPECIFICATIONS

- For cable ladders ECL100 and ECL150.
- Carbon steel, standard surface finish is hot dip galvanized (HDG), in accordance with NEN-EN-ISO 1461.
- Thickness layer 60 to 70 µm.
- Also available in stainless steel 304 or 316L.

INCLUDING

- 1x ESL-SB-H Fixing Set (Square Neck Bolt M10x20, Nut and Washer).

Application

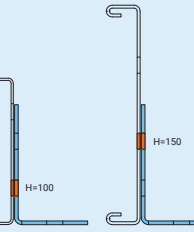

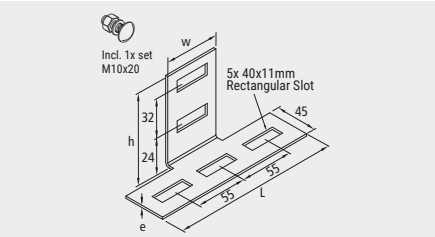

	Article number	L mm	H mm	W mm	E mm	kg/ unit
●	EIFPMB100/150-HDG	180	89,5	60	2,5	0,23

● In stock ● Limited stock ● On request

Available surface finishes	Change H to	Stock
Hot dip galvanized	-	●
Stainless steel A4 / 316L	S316	●
Stainless steel A2 / 304	S304	●

ECBMB100/150 | Eurostrut | Cable Box Mounting Bracket for Cable Ladder ECL

SPECIFICATIONS

- For cable ladders ECL100 and ECL150.
- Carbon steel, standard surface finish is hot dip galvanized (HDG), in accordance with NEN-EN-ISO 1461.
- Thickness layer 60 to 70 µm.
- Also available in stainless steel 304 or 316L.

INCLUDING

- 2x ESL-SB-H Fixing Set (Square Neck Bolt M10x20, Nut and Washer).

	Article number	L mm	W mm	E mm	kg/ unit
●	ECBMB-HDG	245	125	1,5	0,35

● In stock ● Limited stock ● On request

Available surface finishes	Change H to	Stock
Hot dip galvanized	-	●
Stainless steel A4 / 316L	S316	●
Stainless steel A2 / 304	S304	●

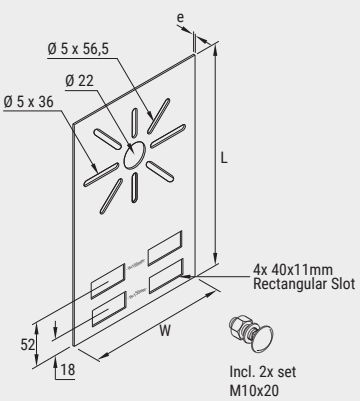

| + 31 10 522 33 51 | info@eurostrut.com | eurostrut.com

ECLSC | Eurostrut | Cover for Cable Ladder ECL

SPECIFICATIONS

- For cable ladders ECL60, ECL100 and ECL150.
- Carbon steel, standard surface finish is hot dip galvanized (HDG), in accordance with NEN-EN-ISO 1461.
- Thickness layer 60 to 70 µm.
- Also available in stainless steel 304 or 316L.
- Other widths available on request.

	Article number	W mm	H mm	E mm	kg/ unit
●	ECLSC100-HDG	150	9	1	3,96
●	ECLSC200-HDG	250	9	1	6,31
●	ECLSC300-HDG	350	9	1	8,67
●	ECLSC400-HDG	450	9	1,5	16,53
●	ECLSC500-HDG	550	9	1,5	20,06
●	ECLSC600-HDG	650	9	1,5	23,60
●	ECLSC700-HDG	750	9	2	36,17
●	ECLSC800-HDG	850	9	2	40,88
●	ECLSC900-HDG	950	9	2	45,59
●	ECLSC1000-HDG	1050	9	2	50,30

● In stock ● Limited stock ● On request

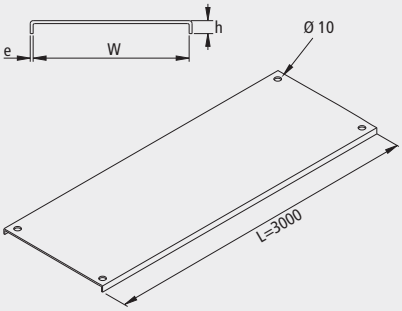

Application (with ECC)

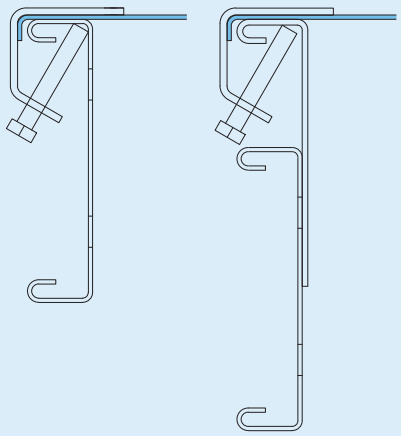

Available surface finishes	Change H to	Stock
Hot dip galvanized	-	●
Stainless steel A4 / 316L	S316	●
Stainless steel A2 / 304	S304	●

EFBC | Eurostrut | Cover Bend 90˚ for Cable Ladder ECL

SPECIFICATIONS

- For cable ladders ECL60, ECL100 and ECL150.
- Carbon steel, standard surface finish is hot dip galvanized (HDG), in accordance with NEN-EN-ISO 1461.
- Thickness layer 60 to 70 µm.
- Also available in stainless steel 304 or 316L
- Standard angle for accessories is 90°.
- The following angles for accessories available on request: 30°, 45° and 60°.
- Standard radius for accessories is 300 mm.
- The following radii for accessories available on request: 450 mm, 600 mm and 900 mm.
- Other widths available on request.

	Article number	W mm	H mm	E mm	kg/ unit
●	EFBC100-90-300-HDG	150	9	1	1,00
●	EFBC200-90-300-HDG	250	9	1	2,00
●	EFBC300-90-300-HDG	350	9	1	4,00
●	EFBC400-90-300-HDG	450	9	1,5	5,50
●	EFBC500-90-300-HDG	550	9	1,5	9,00
●	EFBC600-90-300-HDG	650	9	1,5	11,50
●	EFBC700-90-300-HDG	750	9	2	16,00
●	EFBC800-90-300-HDG	850	9	2	19,50
●	EFBC900-90-300-HDG	950	9	2	22,50
●	EFBC1000-90-300-HDG	1050	9	2	25,50

● In stock ● Limited stock ● On request

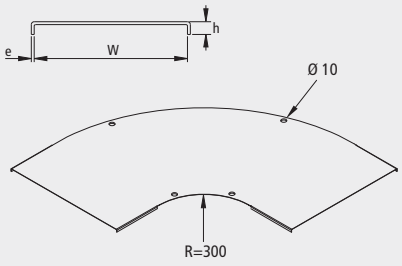

Application (with EHBCC/EVHBCC)

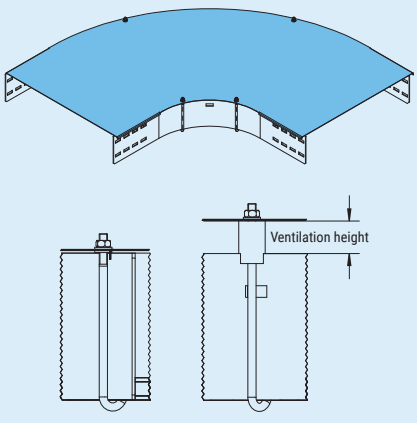

Available surface finishes	Change H to	Stock
Hot dip galvanized	-	●
Stainless steel A4 / 316L	S316	●
Stainless steel A2 / 304	S304	●

EETC | Eurostrut | Cover T-Piece for Cable Ladder ECL

SPECIFICATIONS

- For cable ladders ECL60, ECL100 and ECL150.
- Carbon steel, standard surface finish is hot dip galvanized (HDG), in accordance with NEN-EN-ISO 1461.
- Thickness layer 60 to 70 µm.
- Also available in stainless steel 304 or 316L.
- Standard angle for accessories is 90°.
- Other widths available on request.

	Article number	W mm	H mm	E mm	kg/ unit
●	EETC100-300-HDG	150	9	1	2,00
●	EETC200-300-HDG	250	9	1	4,00
●	EETC300-300-HDG	350	9	1	7,00
●	EETC400-300-HDG	450	9	1,5	9,50
●	EETC500-300-HDG	550	9	1,5	15,50
●	EETC600-300-HDG	650	9	1,5	18,50
●	EETC700-300-HDG	750	9	2	26,50
●	EETC800-300-HDG	850	9	2	31,00
●	EETC900-300-HDG	950	9	2	36,00
●	EETC1000-300-HDG	1050	9	2	41,00

● In stock ● Limited stock ● On request

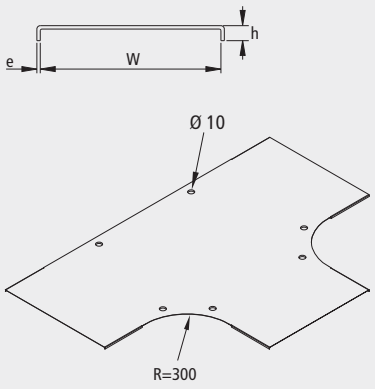

Available surface finishes	Change H to	Stock
Hot dip galvanized	-	●
Stainless steel A4 / 316L	S316	●
Stainless steel A2 / 304	S304	●

Application (with EHBCC/EVHBCC)

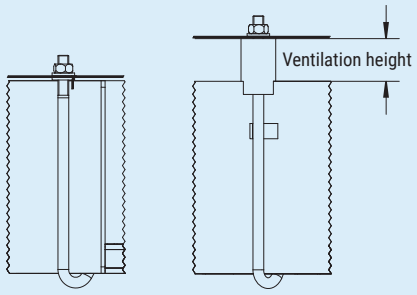

ECOC | Eurostrut | Cover Crossover for Cable Ladder ECL

SPECIFICATIONS

- For cable ladders ECL60, ECL100 and ECL150.
- Carbon steel, standard surface finish is hot dip galvanized (HDG), in accordance with NEN-EN-ISO 1461.
- Thickness layer 60 to 70 µm.
- Also available in stainless steel 304 or 316L.
- Standard angle for accessories is 90°.
- Other widths available on request.

	Article number	W mm	H mm	E mm	kg/ unit
●	ECOC100-300-HDG	150	9	1	3,00
●	ECOC200-300-HDG	250	9	1	5,00
●	ECOC300-300-HDG	350	9	1	9,50
●	ECOC400-300-HDG	450	9	1,5	14,50
●	ECOC500-300-HDG	550	9	1,5	19,50
●	ECOC600-300-HDG	650	9	1,5	24,00
●	ECOC700-300-HDG	750	9	2	34,00
●	ECOC800-300-HDG	850	9	2	39,00
●	ECOC900-300-HDG	950	9	2	45,00
●	ECOC1000-300-HDG	1050	9	2	51,00

● In stock ● Limited stock ● On request

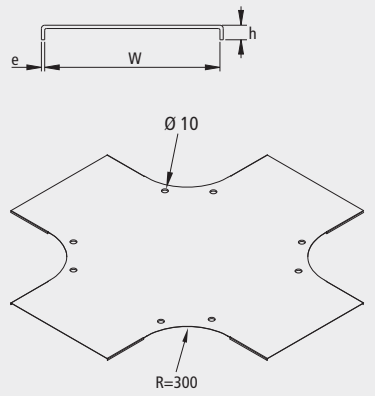

Available surface finishes	Change H to	Stock
Hot dip galvanized	-	●
Stainless steel A4 / 316L	S316	●
Stainless steel A2 / 304	S304	●

Application (with EHBCC/EVHBCC)

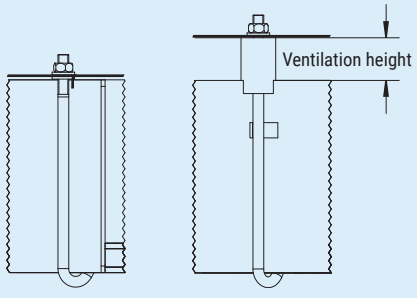

EIRC | Eurostrut | Cover Inside Riser 90° for Cable Ladder ECL

SPECIFICATIONS

- For cable ladders ECL60, ECL100 and ECL150.
- Carbon steel, standard surface finish is hot dip galvanized (HDG), in accordance with NEN-EN-ISO 1461.
- Thickness layer 60 to 70 µm.
- Also available in stainless steel 304 or 316L.
- Standard angle for accessories is 90°.
- Other widths available on request.

	Article number	W mm	H mm	E mm	kg/ unit
●	EIRC100-90-300-HDG	150	9	1	1,00
●	EIRC200-90-300-HDG	250	9	1	2,00
●	EIRC300-90-300-HDG	350	9	1	4,00
●	EIRC400-90-300-HDG	450	9	1,5	5,00
●	EIRC500-90-300-HDG	550	9	1,5	8,00
●	EIRC600-90-300-HDG	650	9	1,5	9,50
●	EIRC700-90-300-HDG	750	9	2	13,50
●	EIRC800-90-300-HDG	850	9	2	15,00
●	EIRC900-90-300-HDG	950	9	2	17,00
●	EIRC1000-90-300-HDG	1050	9	2	19,00

● In stock ● Limited stock ● On request

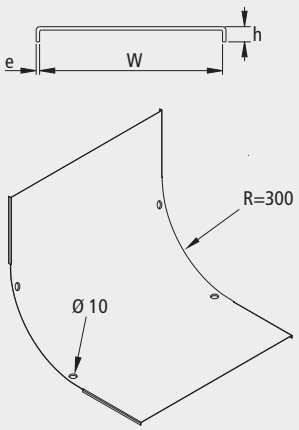

Available surface finishes	Change H to	Stock
Hot dip galvanized	-	●
Stainless steel A4 / 316L	S316	●
Stainless steel A2 / 304	S304	●

Application (with EHBCC/EVHBCC)

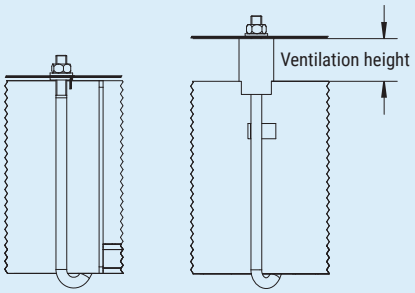

EORC | Eurostrut | Cover Outside Riser 90° for Cable Ladder ECL

SPECIFICATIONS

- For cable ladders ECL60, ECL100 and ECL150.
- Carbon steel, standard surface finish is hot dip galvanized (HDG), in accordance with NEN-EN-ISO 1461.
- Thickness layer 60 to 70 µm.
- Also available in stainless steel 304 or 316L.
- Standard angle for accessories is 90°.
- Other widths available on request.

	Article number	W mm	H mm	E mm	kg/ unit
●	EORC100-90-300-HDG	150	9	1	1,00
●	EORC200-90-300-HDG	250	9	1	2,00
●	EORC300-90-300-HDG	350	9	1	4,00
●	EORC400-90-300-HDG	450	9	1,5	5,00
●	EORC500-90-300-HDG	550	9	1,5	8,00
●	EORC600-90-300-HDG	650	9	1,5	9,50
●	EORC700-90-300-HDG	750	9	2	13,50
●	EORC800-90-300-HDG	850	9	2	15,00
●	EORC900-90-300-HDG	950	9	2	17,00
●	EORC1000-90-300-HDG	1050	9	2	19,00

● In stock ● Limited stock ● On request

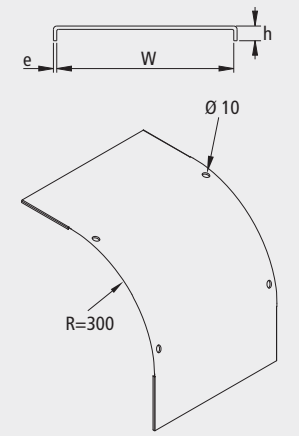

Available surface finishes	Change H to	Stock
Hot dip galvanized	-	●
Stainless steel A4 / 316L	S316	●
Stainless steel A2 / 304	S304	●

Application (with EHBCC/EVHBCC)

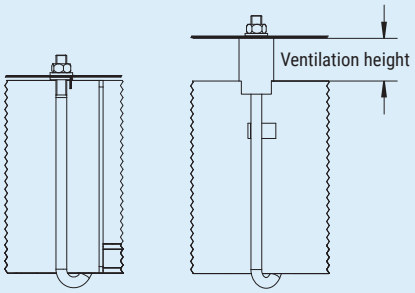

ECC | Eurostrut | Cover Clamp for Cable Ladders ECL

SPECIFICATIONS

- For cable ladders ECL60, 100 and 150.
- Carbon steel, standard surface finish is hot dip galvanized (HDG), in accordance with NEN-EN-ISO 1461.
- Thickness layer 60 to 70 µm.
- Also available in stainless steel 304 or 316L.

INCLUDING

- 1x M6x40 hex head screw

	Article number	L mm	W mm	E mm	kg/ unit
●	ECC-HDG	40	30	2,5	0,05

● In stock ● Limited stock ● On request

Application

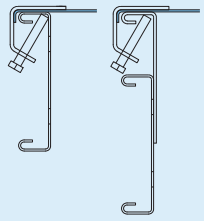

Available surface finishes	Change H to	Stock
Hot dip galvanized	-	●
Stainless steel A4 / 316L	S316	●
Stainless steel A2 / 304	S304	●

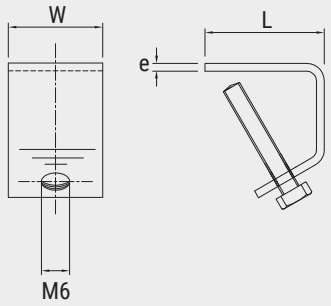

EHBCC150 | Eurostrut | Hook Bolt Cover Clamp for Cable Ladder ECL150

SPECIFICATIONS

- Carbon steel, standard surface finish is hot dip galvanized (HDG), in accordance with NEN-EN-ISO 1461.
- Thickness layer 60 to 70 µm.
- Also available in stainless steel 304 or 316L.

	Article number	L mm	Th mm	H mm	kg/ unit
●	EHBCC150-HDG	125	25	20	0,10

● In stock ● Limited stock ● On request

Application

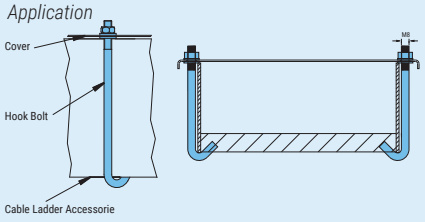

Available surface finishes	Change H to	Stock
Hot dip galvanized	-	●
Stainless steel A4 / 316L	S316	●
Stainless steel A2 / 304	S304	●

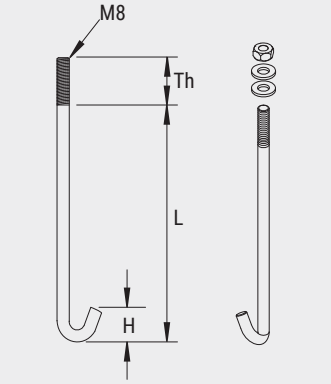

EPEC150 | Eurostrut | Protective End Cap for Cable Ladder ECL150

SPECIFICATIONS

- Material: polyvinyl chloride.
- Color: yellow RAL1021.
- Shore hardness 70°, +/-5° measured at 20°C.
- Tensile strength 15MPa.
- Suitable for temperatures between -15°C and 60°C.

	Article number	H mm	W mm	kg/ unit
●	EPEC150-PY	150	25	0,04

● In stock ● Limited stock ● On request

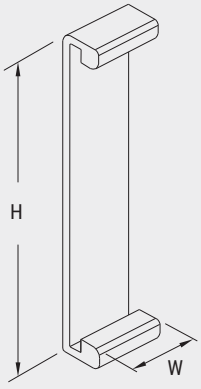

ESL-SB / EFS | Eurostrut | Fixing Set | Square Neck Bolt + Washer + Nut

SPECIFICATIONS

- Surface finish:
  - Hot dip galvanized (H)
  - Stainless steel A4 / 316L (S316)
  - Stainless steel A2 / 304 (S304)
  - Geomet® (GEO)

	Article number	MxL mm	kg/ unit
●	ESL-SB-H	M10x20	0,04
●	ESL-SB-S304	M10x20	0,04
●	ESL-SB-S316	M10x20	0,04
●	EFS06x15-304	M6x15	0,01
●	EFS06x15-316	M6x15	0,01
●	EFS06x15-GEO	M6x15	0,01
●	EFS08x15-304	M8x15	0,014
●	EFS08x15-316	M8x15	0,014
●	EFS08x15-GEO	M8x15	0,014

● In stock ● Limited stock ● On request

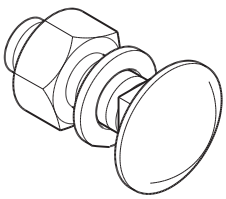

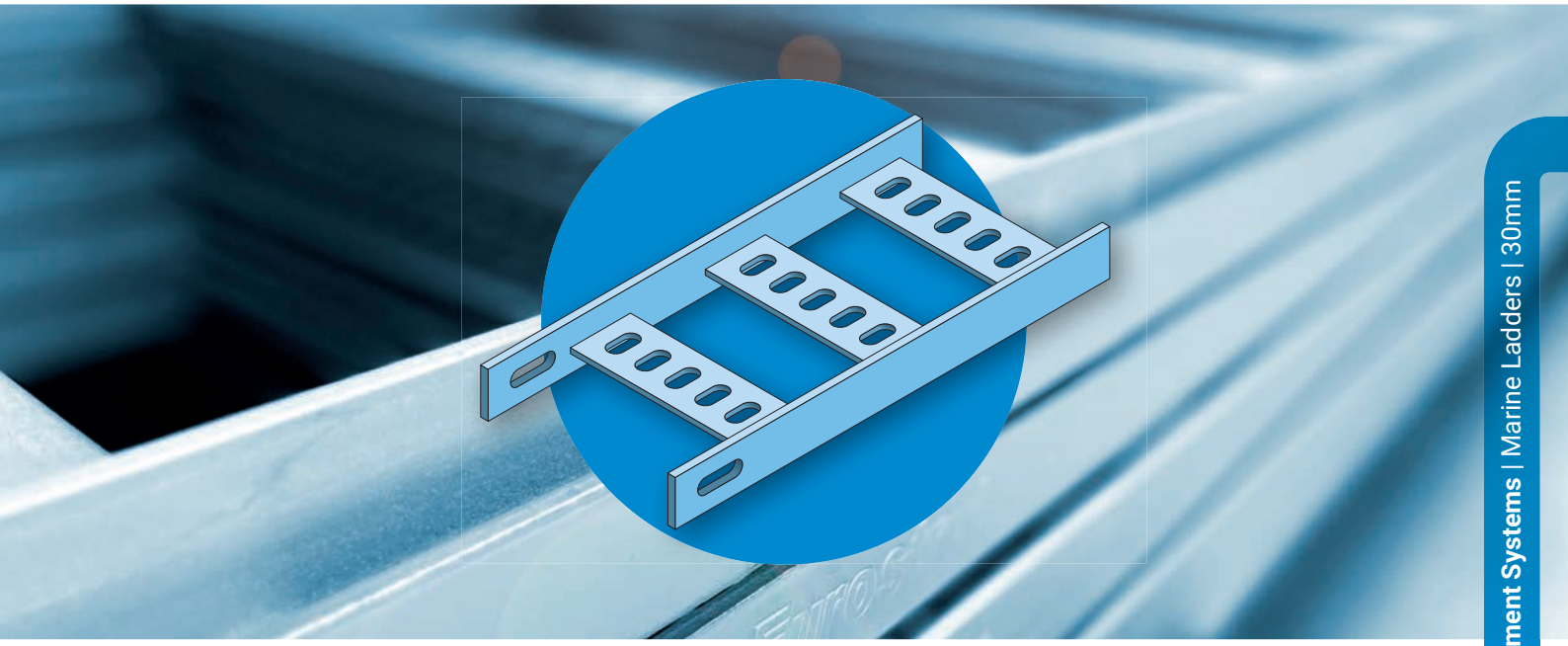

Cable Management Systems

Marine Ladders | 30mm

Marine ladders for locations where space is limited, for lower cable volumes and loads

General specifications

- The Eurostrut marine ladder is manufactured in accordance with BS EN 61537 / IEC 61537.
- Standard material is carbon steel, standard surface finish is hot dip galvanized (HDG), in accordance with NEN-EN-ISO 1461.
- Thickness layer for ladders (and most accessories) is 60 to 70 µm.
- (On request) materials also available in stainless steel 304 or 316L.
- Powder coating according to RAL colors possible.
- The standard angle for accessories is 90°.
- The standard radius for accessories is 150 mm.
- Other angles and radii for accessories are available on request.
- Other widths available on request.

General conditions

- Eurostrut Support Systems & Solutions B.V. is not liable for marine ladders and accessories that are incorrectly installed or where different parts or maintenance methods are applied.
- Although the product information shown in this catalog is accurate and reliable, Eurostrut Support Systems & Solutions B.V. can not be held responsible and liable for inaccuracies.
- The performance data are specific and may be subject to variations due to normal manufacturing tolerances.
- Eurostrut Support Systems & Solutions B.V. reserves the right to change performance information or specifications at any time without notice.

2ba

The convenience of 2ba

Eurostrut's products are listed with all associated information in 2BA's central article database. Product, price and stock information must be continuously available in order to operate efficiently. The 2BA data pool offers the solution.

2ba.nl

The main advantages of 2BA:

- Design, calculate and order more efficiently because all product and price information comes from the same source.
- Data is directly available via the leading ERP software packages or your own custom system.
- You have your own net purchase prices based on Eurostrut's agreed purchasing conditions.

Eurostrut is **ISO 9001 certified**, ensuring quality management across all processes to meet customer requirements and specifications.

By achieving **step 3** certification on the **CO_2 Performance Ladder**, Eurostrut demonstrates its commitment to environmental responsibility and fostering a healthy living environment.

ESL | Eurostrut | Marine Ladder

SPECIFICATIONS

- Length 3 meter
- Thickness 5 mm
- Carbon steel, standard surface finish is hot dip galvanized (HDG), in accordance with NEN-EN-ISO 1461.
- Thickness layer 65 to 70 µm.
- Also available in stainless steel 304 or 316L.
- Powder coating according to RAL colors possible.

	Article number	B mm	H mm	L mm	kg/ unit
●	ESL-075H	75	30	3000	8,4
●	ESL-100H	100	30	3000	8,7
●	ESL-150H	150	30	3000	9,3
●	ESL-200H	200	30	3000	9,9
●	ESL-250H	250	30	3000	10,6
●	ESL-300H	300	30	3000	11,4
●	ESL-400H	400	30	3000	12,9
●	ESL-500H	500	30	3000	14,4
●	ESL-600H	600	30	3000	-

● In stock ● Limited stock ● On request

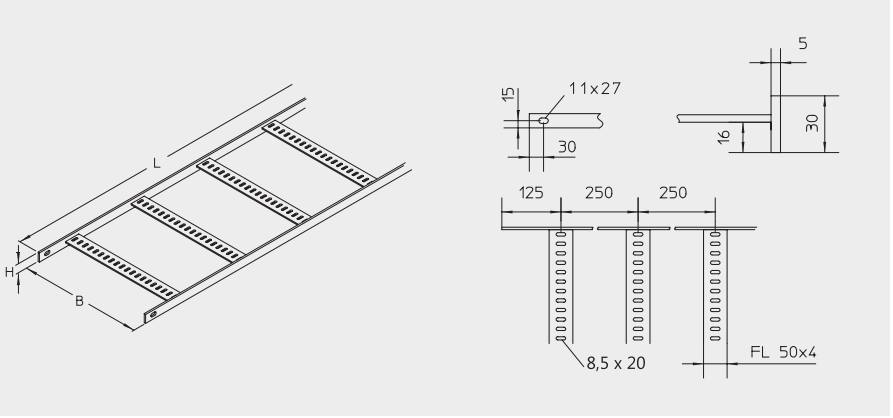

Available surface finishes	Change H to	Stock
Hot dip galvanized	-	●
Stainless steel A4 / 316L	S316	●
Stainless steel A2 / 304	S304	●



LOAD DATA

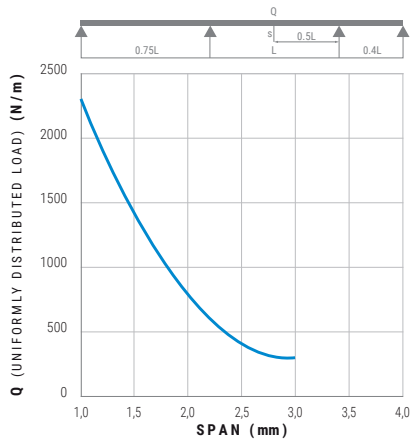

ESL-B | Eurostrut | Horizontal Bend for Marine Ladder

SPECIFICATIONS

- Carbon steel, standard surface finish is hot dip galvanized (HDG), in accordance with NEN-EN-ISO 1461.
- Thickness layer 65 to 70 µm.
- Also available in stainless steel 304 or 316L.
- Standard angle for accessories is 90°.
- Other angles and radii available on request.

	Article number	B mm	H mm	R mm	kg/ unit
●	ESL-B-075H	75	30	150	1,6
●	ESL-B-100H	100	30	150	1,7
●	ESL-B-150H	150	30	150	2,0
●	ESL-B-200H	200	30	150	2,2
●	ESL-B-250H	250	30	150	3,0
●	ESL-B-300H	300	30	150	3,7
●	ESL-B-400H	400	30	150	4,5
●	ESL-B-500H	500	30	150	6,1
●	ESL-B-600H	600	30	150	-

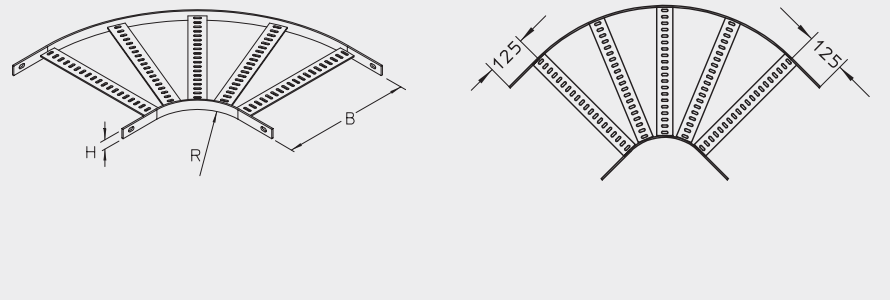

Available surface finishes	Change H to	Stock
Hot dip galvanized	-	●
Stainless steel A4 / 316L	S316	●
Stainless steel A2 / 304	S304	●

● In stock ● Limited stock ● On request



ESL-T | Eurostrut | T-piece for Marine Ladder

SPECIFICATIONS

- Carbon steel, standard surface finish is hot dip galvanized (HDG), in accordance with NEN-EN-ISO 1461.
- Thickness layer 65 to 70 µm.
- Also available in stainless steel 304 or 316L.
- Standard angle for accessories is 90°.
- Other angles and radii available on request.

	Article number	B mm	H mm	R mm	kg/ unit
●	ESL-T-075H	75	30	150	2,5
●	ESL-T-100H	100	30	150	2,7
●	ESL-T-150H	150	30	150	3,2
●	ESL-T-200H	200	30	150	3,6
●	ESL-T-250H	250	30	150	-
●	ESL-T-300H	300	30	150	5,4
●	ESL-T-400H	400	30	150	6,5
●	ESL-T-500H	500	30	150	8,8
●	ESL-T-600H	600	30	150	-

● In stock ● Limited stock ● On request

Available surface finishes	Change H to	Stock
Hot dip galvanized	-	●
Stainless steel A4 / 316L	S316	●
Stainless steel A2 / 304	S304	●

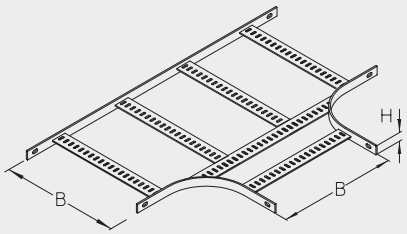

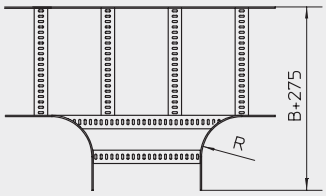

ESL-A | Eurostrut | Stitch On Piece for Marine Ladder

SPECIFICATIONS

- Carbon steel, standard surface finish is hot dip galvanized (HDG), in accordance with NEN-EN-ISO 1461.
- Thickness layer 65 to 70 µm.
- Also available in stainless steel 304 or 316L.
- Standard angle for accessories is 90°.
- Other angles and radii available on request.

	Article number	B mm	H mm	R mm	kg/ unit
●	ESL-A-075H	75	30	150	1,4
●	ESL-A-100H	100	30	150	1,5
●	ESL-A-150H	150	30	150	1,7
●	ESL-A-200H	200	30	150	1,8
●	ESL-A-250H	250	30	150	-
●	ESL-A-300H	300	30	150	2,5
●	ESL-A-400H	400	30	150	2,8
●	ESL-A-500H	500	30	150	3,4
●	ESL-A-600H	600	30	150	-

● In stock ● Limited stock ● On request

Available surface finishes	Change H to	Stock
Hot dip galvanized	-	●
Stainless steel A4 / 316L	S316	●
Stainless steel A2 / 304	S304	●

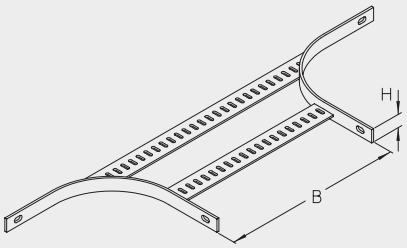

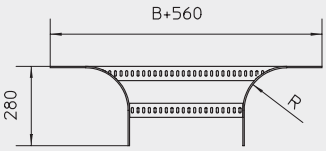

ESL-SV | Eurostrut | Vertical Inside / Outside Bend for Marine Ladder

SPECIFICATIONS

- Carbon steel, standard surface finish is hot dip galvanized (HDG), in accordance with NEN-EN-ISO 1461.
- Thickness layer 65 to 70 µm.
- Also available in stainless steel 304 or 316L.
- Standard angle for accessories is 90°.
- Other angles and radii available on request.

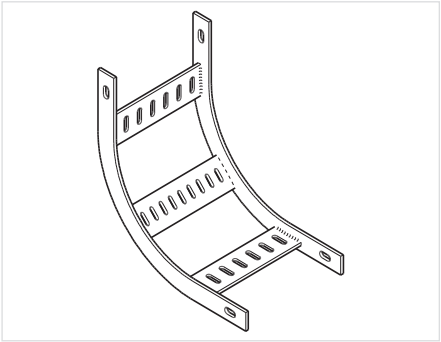

	Article number	B mm	H mm	R mm	kg/ unit
●	ESL-SV-075H	75	30	150	0,9
●	ESL-SV-100H	100	30	150	1,0
●	ESL-SV-150H	150	30	150	1,0
●	ESL-SV-200H	200	30	150	1,3
●	ESL-SV-250H	250	30	150	-
●	ESL-SV-300H	300	30	150	1,7
●	ESL-SV-400H	400	30	150	2,8
●	ESL-SV-500H	500	30	150	3,3
●	ESL-SV-600H	600	30	150	-

● In stock ● Limited stock ● On request

Available surface finishes	Change H to	Stock
Hot dip galvanized	-	●
Stainless steel A4 / 316L	S316	●
Stainless steel A2 / 304	S304	●

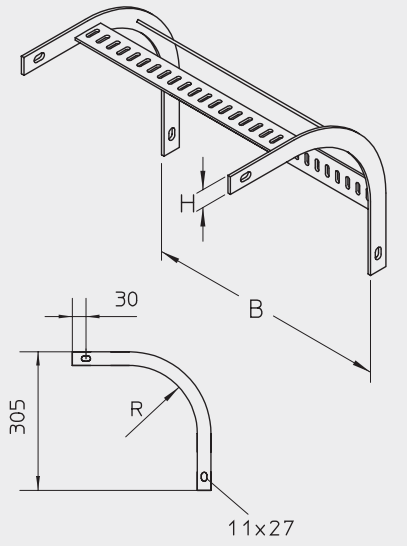

ESL-SC | Eurostrut | Straight Connector for Marine Ladder

SPECIFICATIONS

- Carbon steel, standard surface finish is hot dip galvanized (HDG), in accordance with NEN-EN-ISO 1461.
- Thickness layer 65 to 70 µm.
- Also available in stainless steel 304 or 316L.
- Inclusive 2x Eurostrut Fixing Set ESL-SB (Square Neck Bolt M10x20, Washer and Nut).

	Article number	B mm	H mm	kg/ unit
●	ESL-SC-H	120	38	0,1
●	ESL-SC-S304	120	38	0,1
●	ESL-SC-S316	120	38	0,1

● In stock ● Limited stock ● On request

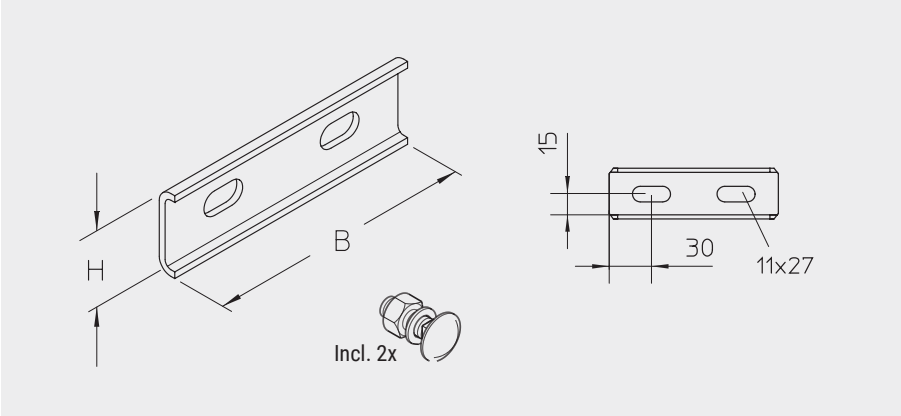

ESL-VC | Eurostrut | Vertical Hinged Connector for Marine Ladder

SPECIFICATIONS

- Carbon steel, standard surface finish is hot dip galvanized (HDG), in accordance with NEN-EN-ISO 1461.
- Thickness layer 65 to 70 µm.
- Also available in stainless steel 304 or 316L.
- Inclusive 2x Eurostrut Fixing Set ESL-SB (Square Neck Bolt M10x20, Washer and Nut).

	Article number	B mm	H mm	kg/ unit
●	ESL-VC-H	120	38	0,1
●	ESL-VC-S304	120	38	0,1
●	ESL-VC-S316	120	38	0,1

● In stock ● Limited stock ● On request

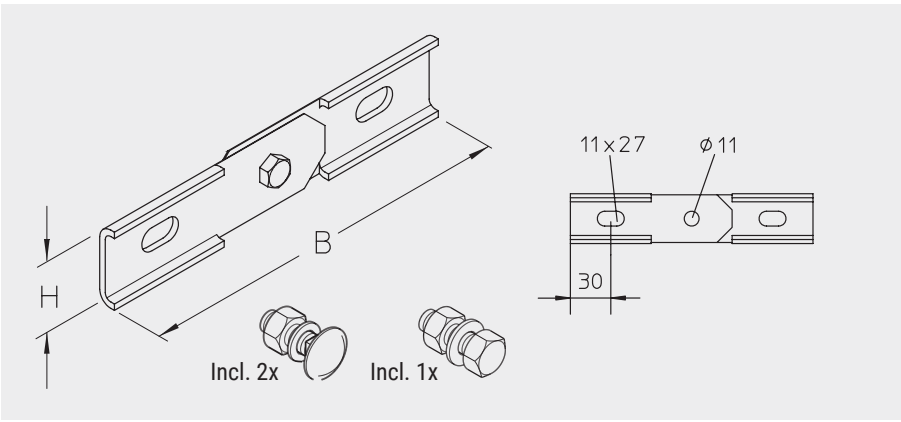

ESL-DIV | Eurostrut | Divider for Marine Ladder

SPECIFICATIONS

- Carbon steel, standard surface finish is hot dip galvanized (HDG), in accordance with NEN-EN-ISO 1461.
- Thickness layer 65 to 70 µm.
- Also available in stainless steel 304 or 316L.
- Inclusive 3x Eurostrut Fixing Set EFS08x15 (Square Neck Bolt M8x15, Washer and Nut).

	Article number	L mm	H mm	B mm	T mm	kg/ unit
●	ESL-DIV-H	3000	15	25	2	0,8
●	ESL-DIV-S304	3000	15	25	2	0,8
●	ESL-DIV-S316	3000	15	25	2	0,8

● In stock ● Limited stock ● On request

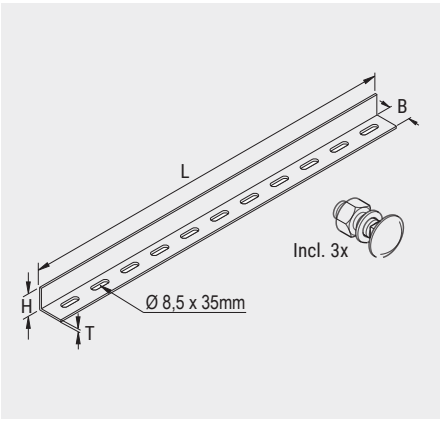

Application

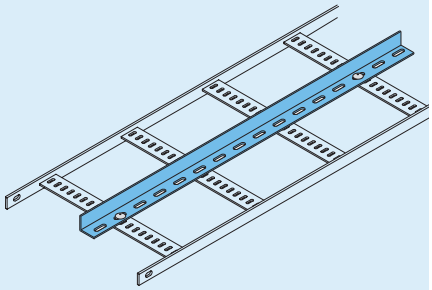

ESL-SB / EFS | Eurostrut | Fixing Set | Square Neck Bolt + Washer + Nut

SPECIFICATIONS

- Surface finish:
  - Hot dip galvanized (H)
  - Stainless steel A4 / 316L (S316)
  - Stainless steel A2 / 304 (S304)
  - Geomet® (GEO)

	Article number	MxL mm	kg/ unit
●	ESL-SB-H	M10x20	0,04
●	ESL-SB-S304	M10x20	0,04
●	ESL-SB-S316	M10x20	0,04
●	EFS06x15-304	M6x15	0,01
●	EFS06x15-316	M6x15	0,01
●	EFS06x15-GEO	M6x15	0,01
●	EFS08x15-304	M8x15	0,014
●	EFS08x15-316	M8x15	0,014
●	EFS08x15-GEO	M8x15	0,014

● In stock ● Limited stock ● On request

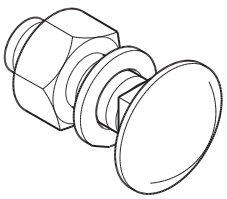

ESL-HC | Eurostrut | Hold Down Clamp for Marine Ladder

SPECIFICATIONS

- Carbon steel, standard surface finish is hot dip galvanized (HDG), in accordance with NEN-EN-ISO 1461.
- Thickness layer 65 to 70 µm.
- Also available in stainless steel 304 or 316L.

	Article number	kg/ unit
●	ESL-HC-H	0,04
●	ESL-HC-S304	0,12
●	ESL-HC-S316	0,12

● In stock ● Limited stock ● On request

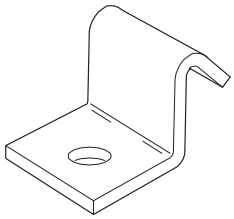

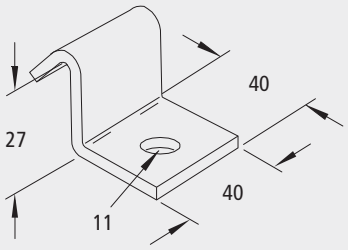

ESL-HB | Eurostrut | Hook Bolt M8 for Marine Ladder

SPECIFICATIONS

- Including washer and hex nut bolt
- Carbon steel, standard surface finish is hot dip galvanized (HDG), in accordance with NEN-EN-ISO 1461.
- Thickness layer 65 to 70 µm.
- Also available in stainless steel 304 or 316L.

	Article number	kg/ unit
●	ESL-HB-H	0,04
●	ESL-HB-S304	0,04
●	ESL-HB-S316	0,04

● In stock ● Limited stock ● On request

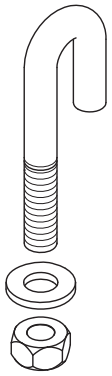

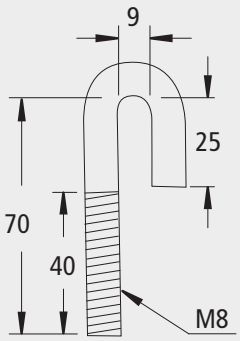

ESL-PECB | Eurostrut | Protection End Cap Black for Marine Ladder

SPECIFICATIONS

- Material: PVC

	Article number	B mm	H mm	L mm	kg/ unit
●	ESL-PECB	5	30	25	0,005

● In stock ● Limited stock ● On request

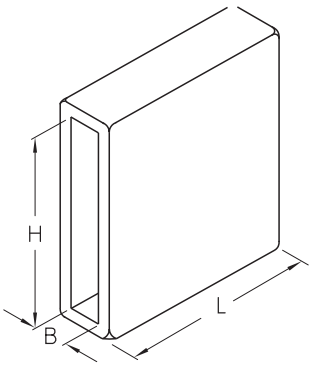

Application

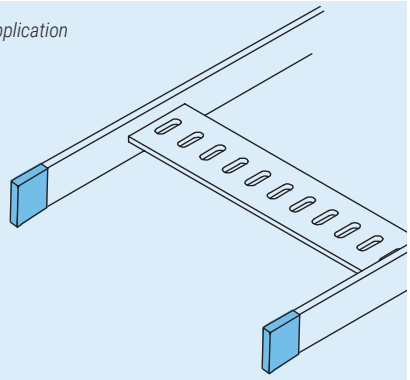

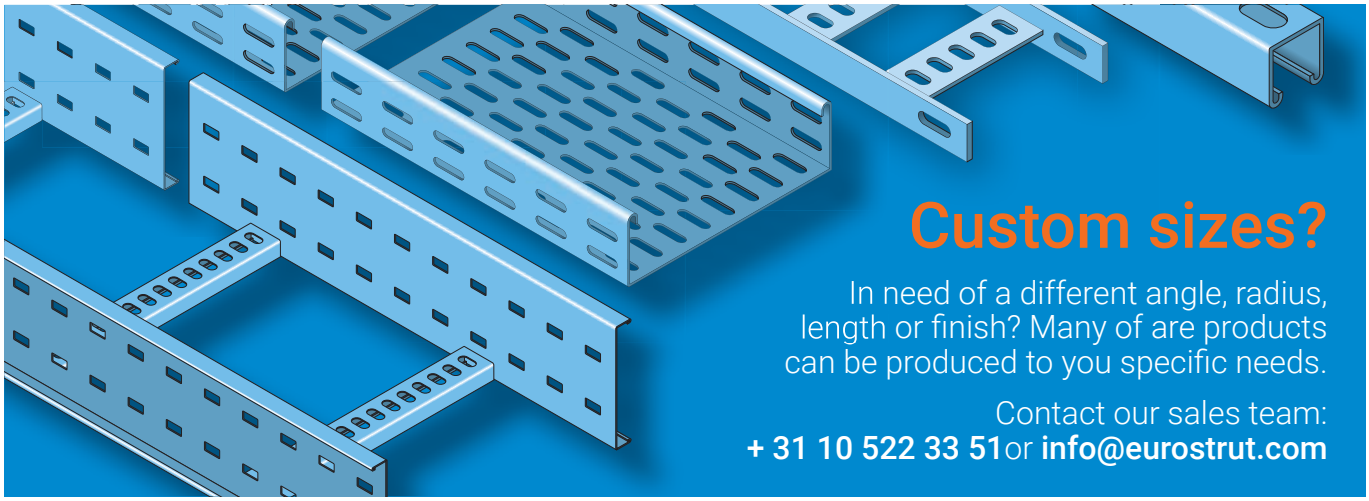

Custom sizes?

In need of a different angle, radius, length or finish? Many of are products can be produced to you specific needs.

Contact our sales team:
+ 31 10 522 33 51 or **info@eurostrut.com**

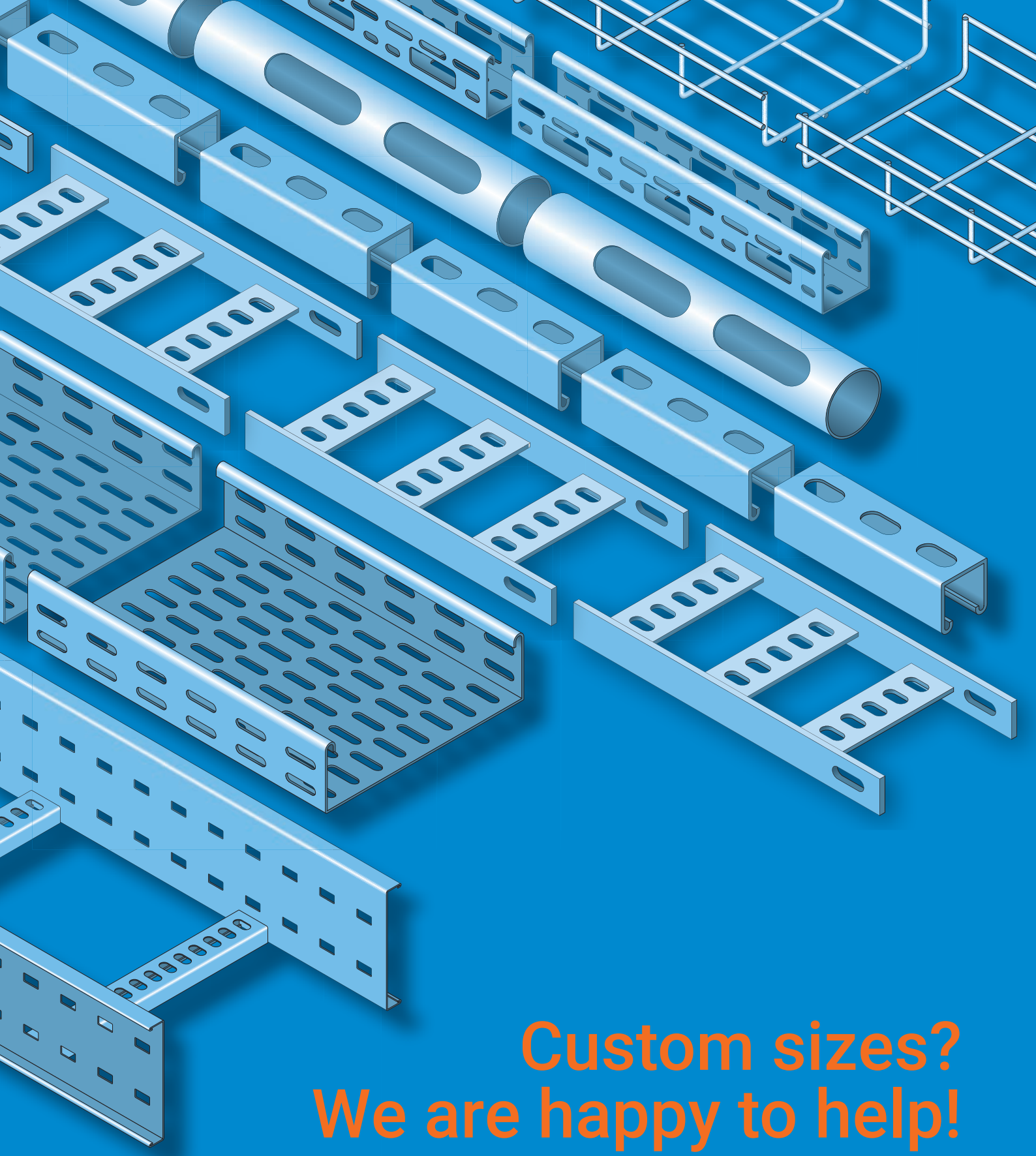

Custom sizes? We are happy to help!

In need of a different angle, radius, length or finish? Many of are products can be produced to you specific needs.

Contact our sales team:
+ 31 10 522 33 51 or **info@eurostrut.com**

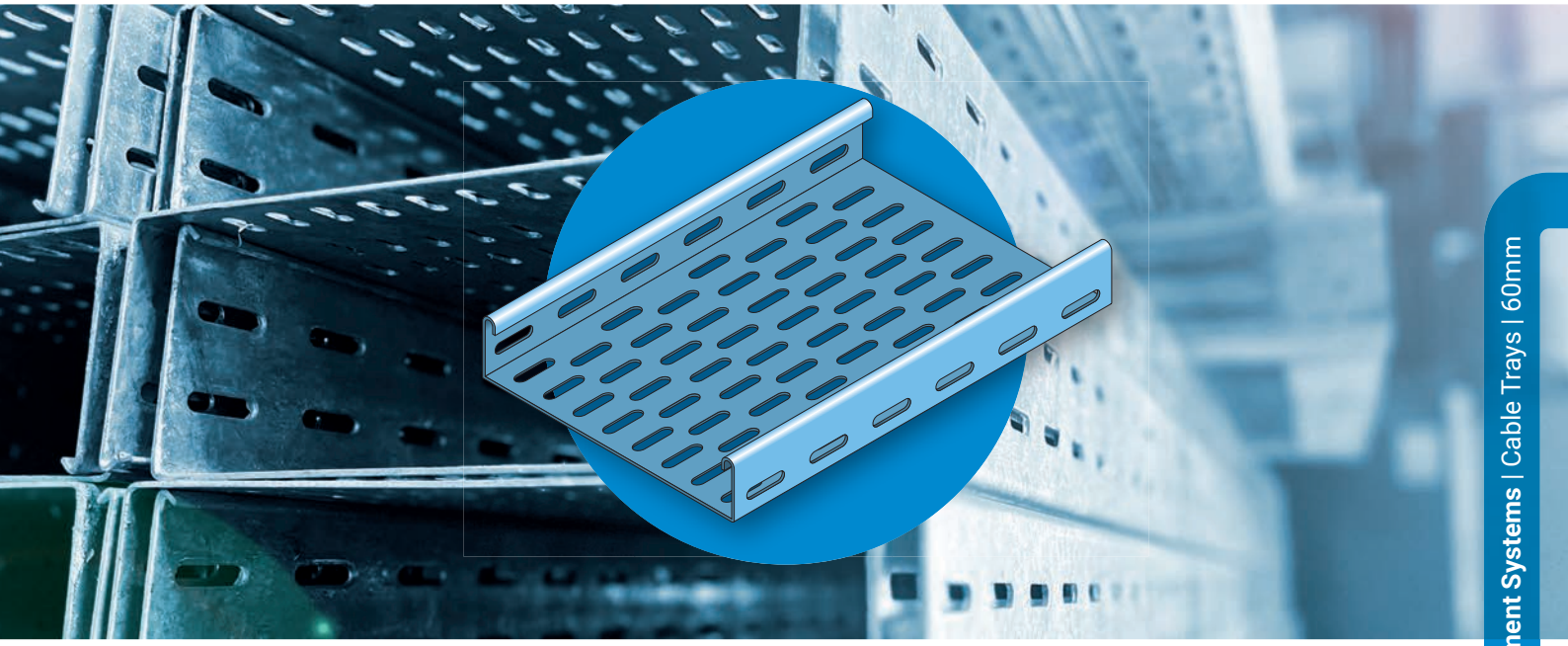

Cable Management Systems
Cable Trays | 60mm
Medium and heavy duty cable tray system for utility construction and industrial environments

General specifications

- The Eurostrut cable tray is manufactured in accordance with BS EN 61537 / IEC 61537.
- Standard material is carbon steel, standard surface finish is hot dip galvanized (HDG), in accordance with NEN-EN-ISO 1461.
- Thickness layer for trays (and most accessories) is 60 to 70 µm.
- (On request) materials also available in stainless steel 304 or 316L.
- Powder coating according to RAL colors possible.
- Accessories must be supported on all sides.
- The standard heights are 60 and 100 mm.
- The standard angle for accessories is 90°.
- The standard radius for accessories is 90 mm.
- Other angles and radii for accessories are available on request.
- Other widths available on request.

General conditions

- Eurostrut Support Systems & Solutions B.V. is not liable for cable trays and accessories that are incorrectly installed or where different parts or maintenance methods are applied.
- Although the product information shown in this catalog is accurate and reliable, Eurostrut Support Systems & Solutions B.V. can not be held responsible and liable for inaccuracies.
- The performance data are specific and may be subject to variations due to normal manufacturing tolerances.
- Eurostrut Support Systems & Solutions B.V. reserves the right to change performance information or specifications at any time without notice.

2ba

The convenience of 2ba

Eurostrut's products are listed with all associated information in 2BA's central article database. Product, price and stock information must be continuously available in order to operate efficiently. The 2BA data pool offers the solution.

2ba.nl

The main advantages of 2BA:

- Design, calculate and order more efficiently because all product and price information comes from the same source.
- Data is directly available via the leading ERP software packages or your own custom system.
- You have your own net purchase prices based on Eurostrut's agreed purchasing conditions.

Eurostrut is **ISO 9001 certified**, ensuring quality management across all processes to meet customer requirements and specifications.

By achieving **step 3** certification on the **CO_2 Performance Ladder**, Eurostrut demonstrates its commitment to environmental responsibility and fostering a healthy living environment.

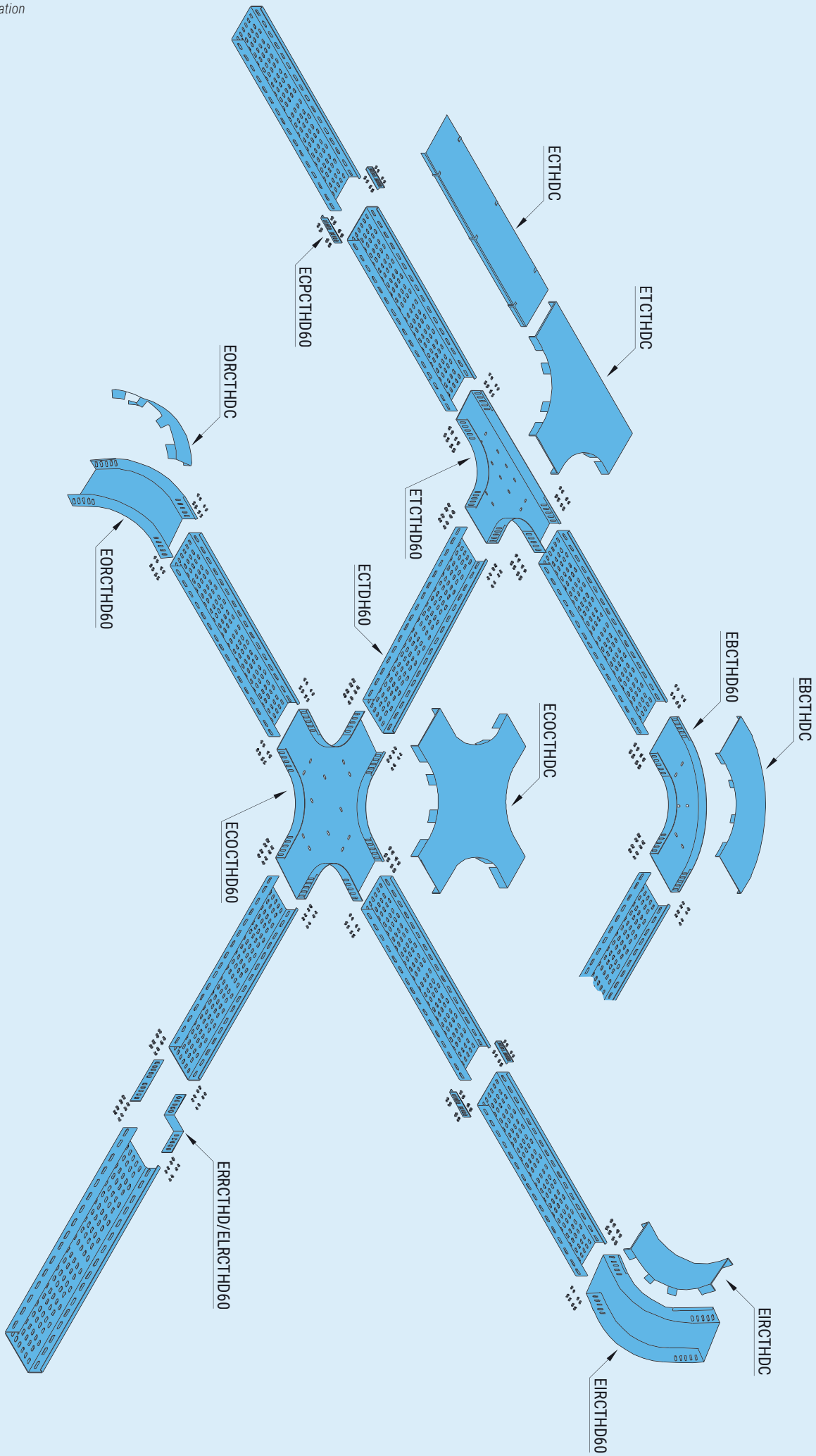
ECTHDC
ECPCTHD60
ETCTHDC
EORCTHDC
ETCTHD60
EORCTHD60
ECTDH60
EBCTHD60
EBCTHDC
ECOCTHDC
ECOCTHD60
ERRCTHD/ELRCTHD60
EIRCTHDC
EIRCTHD60

ECTMDP60 | Eurostrut | Medium Duty Cable Tray Perforated

SPECIFICATIONS

- Medium duty perforated cable tray.
- Carbon steel, standard surface finish is hot dip galvanized (HDG), in accordance with NEN-EN-ISO 1461.
- Thickness layer 60 to 70 µm.
- On request: pre galvanized, stainless steel 304 or 316L.
- Powder coating according to RAL colors possible.
- Accessories must be supported on all sides.
- Standard angle for accessories is 90°.
- Length 3 meter.
- Other widths available on request.

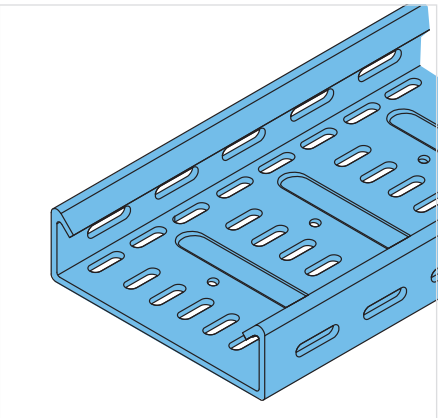

LOAD DATA

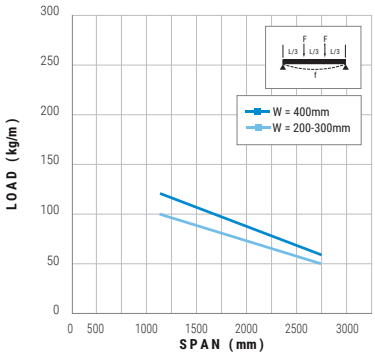

	Article number	W mm	H mm	E mm	kg/ unit
●	ECTHMD60-75-HDG	75	60	0,8	
●	ECTHMD60-100-HDG	100	60	0,8	1,52
●	ECTHMD60-200-HDG	200	60	0,8	2,16
●	ECTHMD60-300-HDG	300	60	0,8	2,80
●	ECTHMD60-400-HDG	400	60	1,0	4,30

● In stock ● Limited stock ● On request

Available surface finishes	Change HDG to	Stock
Hot dip galvanized	-	●
Pre galvanized	PG	●
Stainless steel A4 / 316L	SS316	●
Stainless steel A2 / 304	SS304	●

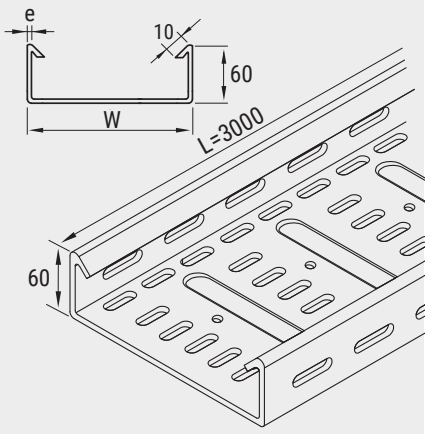

W=75, 100, 200mm

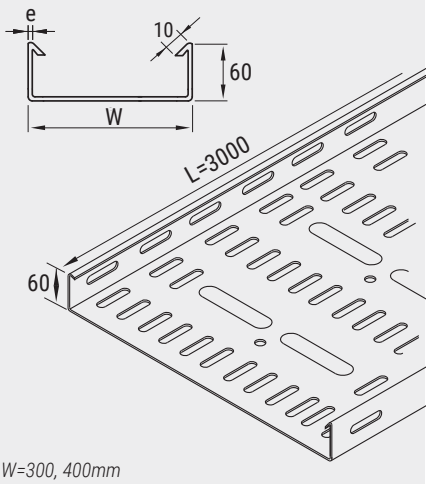

W=300, 400mm

ECTHDP60 | Eurostrut | Heavy Duty Cable Tray Perforated

SPECIFICATIONS

- Heavy duty perforated cable tray.
- Carbon steel, standard surface finish is hot dip galvanized (HDG), in accordance with NEN-EN-ISO 1461.
- Thickness layer 60 to 70 µm.
- On request: stainless steel 304 or 316L.
- Powder coating according to RAL colors possible.
- Accessories must be supported on all sides.
- Standard angle for accessories is 90°.
- Length 3 meter.
- Other widths available on request.

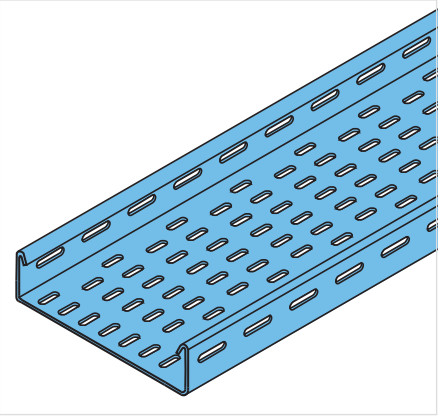

LOAD DATA

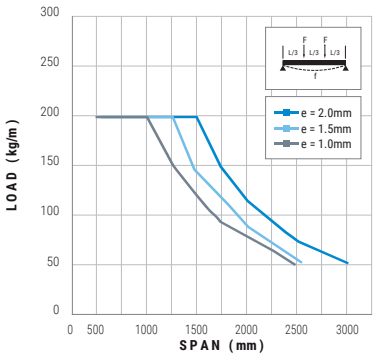

	Article number	W mm	H mm	E mm	kg/ unit
●	ECTHDP60-50-HDG	50	60	1,5	1,4
●	ECTHDP60-100-HDG	100	60	1,5	2,6
●	ECTHDP60-200-HDG	200	60	1,5	3,75
●	ECTHDP60-300-HDG	300	60	1,5	4,65
●	ECTHDP60-400-HDG	400	60	2,0	7,5
●	ECTHDP60-500-HDG	500	60	2,0	9,2
●	ECTHDP60-600-HDG	600	60	2,0	10,6

● In stock ● Limited stock ● On request

Available surface finishes	Change HDG to	Stock
Hot dip galvanized	-	●
Pre galvanized	PG	●
Stainless steel A4 / 316L	SS316	●
Stainless steel A2 / 304	SS304	●

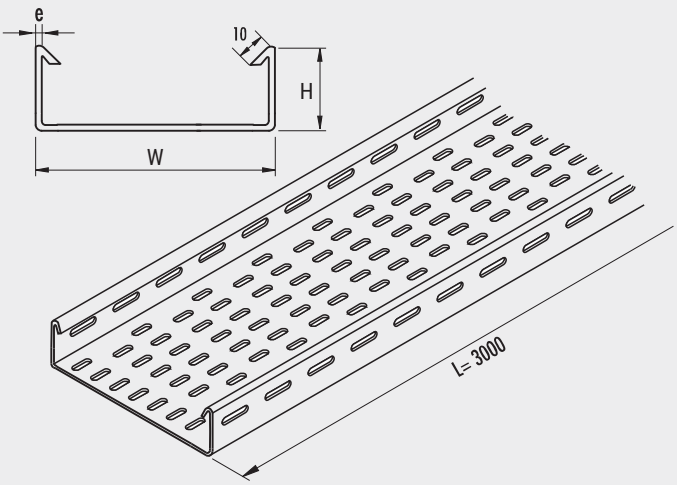

ECTHDNP60 | Eurostrut | Heavy Duty Cable Tray Non-Perforated

SPECIFICATIONS

- Heavy duty cable tray.
- Carbon steel, standard surface finish is hot dip galvanized (HDG), in accordance with NEN-EN-ISO 1461.
- Thickness layer 60 to 70 µm.
- On request: stainless steel 304 or 316L.
- Powder coating according to RAL colors possible.
- Accessories must be supported on all sides.
- Standard angle for accessories is 90°.
- Length 3 meter.
- Other widths available on request.

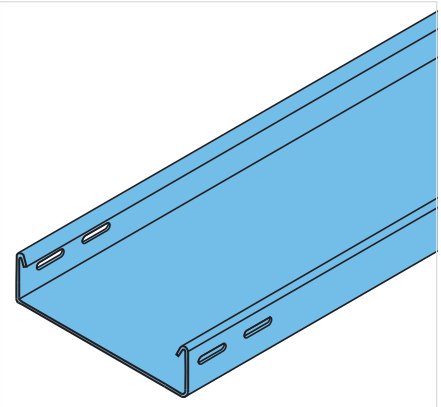

LOAD DATA

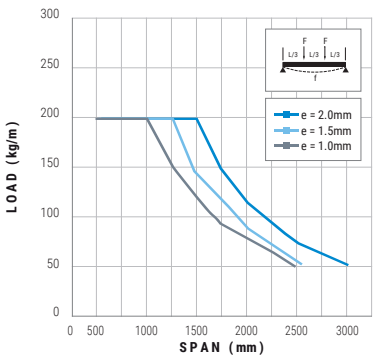

	Article number	W mm	H mm	E mm	kg/ unit
●	ECTHDNP60-50-HDG	50	60	1,0	2,1
●	ECTHDNP60-100-HDG	100	60	1,5	4,15
●	ECTHDNP60-200-HDG	200	60	1,5	5,65
●	ECTHDNP60-300-HDG	300	60	1,5	8,4
●	ECTHDNP60-400-HDG	400	60	2,0	14,7
●	ECTHDNP60-500-HDG	500	60	2,0	17,7
●	ECTHDNP60-600-HDG	600	60	2,0	20,7

● In stock ● Limited stock ● On request

Available surface finishes	Change HDG to	Stock
Hot dip galvanized	-	●
Pre galvanized	PG	●
Stainless steel A4 / 316L	SS316	●
Stainless steel A2 / 304	SS304	●

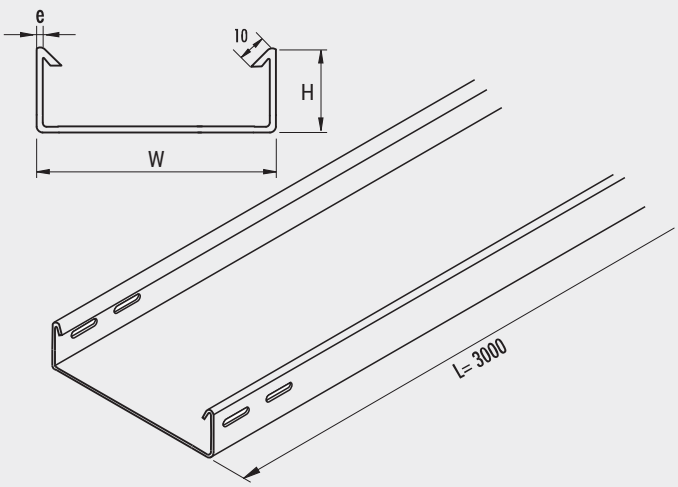

EBCTHD60 | Eurostrut | Bend for Cable Tray ECT60

SPECIFICATIONS

- Carbon steel, standard surface finish is hot dip galvanized (HDG), in accordance with NEN-EN-ISO 1461.
- Thickness layer 60 to 70 µm.
- On request: stainless steel 304 or 316L.
- Accessories must be supported on all sides.
- Standard angle for accessories is 90°.
- Other widths available on request.

INCLUDING

- 8x EFS08x15-GEO Fixing Set (Square Neck Bolt M8x15, Nut and Washer)

	Article number	W mm	H mm	E mm	kg/ unit
●	EBCTHD60-50-HDG	55	60	1,5	1,00
●	EBCTHD60-100-HDG	105	60	1,5	1,28
●	EBCTHD60-200-HDG	205	60	1,5	1,91
●	EBCTHD60-300-HDG	305	60	2,0	3,62
●	EBCTHD60-400-HDG	405	60	2,0	4,99
●	EBCTHD60-500-HDG	505	60	2,0	6,52
●	EBCTHD60-600-HDG	605	60	2,0	8,83

● In stock ● Limited stock ● On request

Available surface finishes	Change HDG to	Stock
Hot dip galvanized	-	●
Pre galvanized	PG	●
Stainless steel A4 / 316L	SS316	●
Stainless steel A2 / 304	SS304	●

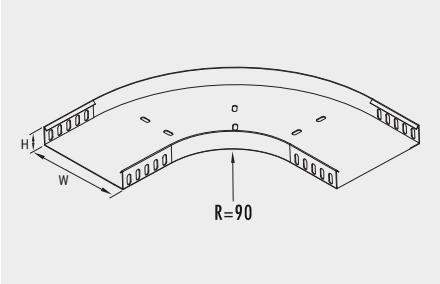

Application

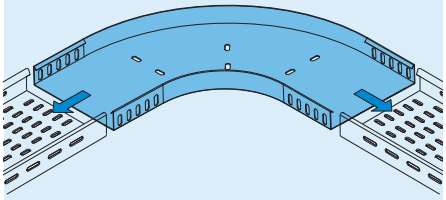

ETCTHD60 | Eurostrut | T-piece for Cable Tray ECT60

SPECIFICATIONS

- Carbon steel, standard surface finish is hot dip galvanized (HDG), in accordance with NEN-EN-ISO 1461.
- Thickness layer 60 to 70 µm.
- On request: stainless steel 304 or 316L.
- Accessories must be supported on all sides.
- Standard angle for accessories is 90°.
- Other widths available on request.

INCLUDING

- 12x EFS08x15-GEO Fixing Set (Square Neck Bolt M8x15, Nut and Washer)

	Article number	W mm	H mm	E mm	kg/ unit
●	ETCTHD60-50-HDG	55	60	1,5	1,50
●	ETCTHD60-100-HDG	105	60	1,5	1,92
●	ETCTHD60-200-HDG	205	60	1,5	2,71
●	ETCTHD60-300-HDG	305	60	2,0	4,98
●	ETCTHD60-400-HDG	405	60	2,0	6,67
●	ETCTHD60-500-HDG	505	60	2,0	8,67
●	ETCTHD60-600-HDG	605	60	2,0	11,0

● In stock ● Limited stock ● On request

Available surface finishes	Change HDG to	Stock
Hot dip galvanized	-	●
Pre galvanized	PG	●
Stainless steel A4 / 316L	SS316	●
Stainless steel A2 / 304	SS304	●

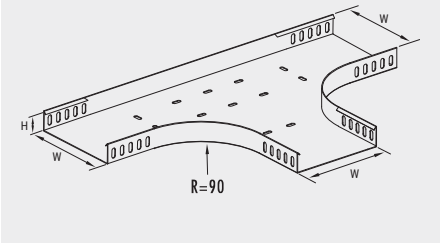

Application

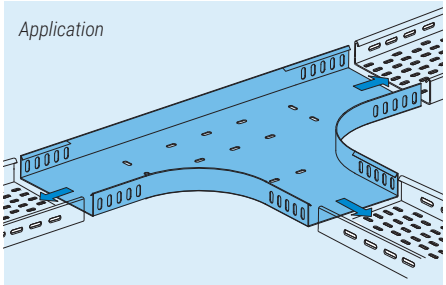

ECOCTHD60 | Eurostrut | Crossover for Cable Tray ECT60

SPECIFICATIONS

- Carbon steel, standard surface finish is hot dip galvanized (HDG), in accordance with NEN-EN-ISO 1461.
- Thickness layer 60 to 70 µm.
- On request: stainless steel 304 or 316L.
- Accessories must be supported on all sides.
- Standard angle for accessories is 90°.
- Other widths available on request.

INCLUDING

- 16x EFS08x15-GEO Fixing Set (Square Neck Bolt M8x15, Nut and Washer)

	Article number	W mm	H mm	E mm	kg/ unit
●	ECOCTHD60-50-HDG	55	60	1,5	2,00
●	ECOCTHD60-100-HDG	105	60	1,5	2,34
●	ECOCTHD60-200-HDG	205	60	1,5	3,13
●	ECOCTHD60-300-HDG	305	60	2,0	5,40
●	ECOCTHD60-400-HDG	405	60	2,0	7,10
●	ECOCTHD60-500-HDG	505	60	2,0	9,10
●	ECOCTHD60-600-HDG	605	60	2,0	11,4

● In stock ● Limited stock ● On request

Available surface finishes	Change HDG to	Stock
Hot dip galvanized	-	●
Pre galvanized	PG	●
Stainless steel A4 / 316L	SS316	●
Stainless steel A2 / 304	SS304	●

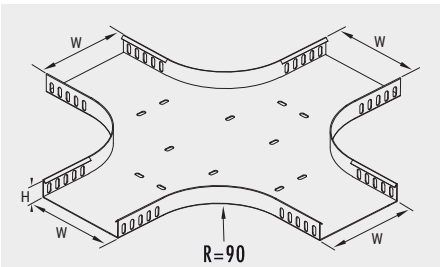

Application

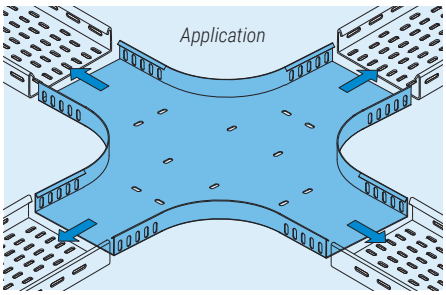

EIRCTHD60 | Eurostrut | Inside Riser for Cable Tray ECT60

SPECIFICATIONS

- Carbon steel, standard surface finish is hot dip galvanized (HDG), in accordance with NEN-EN-ISO 1461.
- Thickness layer 60 to 70 µm.
- On request: stainless steel 304 or 316L.
- Accessories must be supported on all sides.
- Standard angle for accessories is 90°.
- Other widths available on request.

INCLUDING

- 8x EFS08x15-GEO Fixing Set (Square Neck Bolt M8x15, Nut and Washer)

	Article number	W mm	H mm	E mm	kg/ unit
●	EIRCTHD60-50-HDG	55	60	1,5	1,10
●	EIRCTHD60-100-HDG	105	60	1,5	1,26
●	EIRCTHD60-200-HDG	205	60	1,5	1,56
●	EIRCTHD60-300-HDG	305	60	2,0	2,46
●	EIRCTHD60-400-HDG	405	60	2,0	2,84
●	EIRCTHD60-500-HDG	505	60	2,0	3,23
●	EIRCTHD60-600-HDG	605	60	2,0	3,63

● In stock ● Limited stock ● On request

Available surface finishes	Change HDG to	Stock
Hot dip galvanized	-	●
Pre galvanized	PG	●
Stainless steel A4 / 316L	SS316	●
Stainless steel A2 / 304	SS304	●

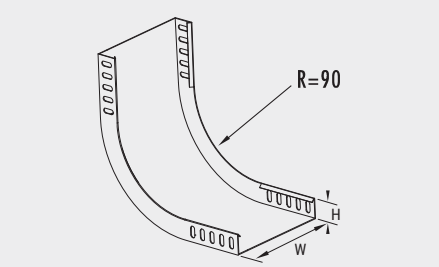

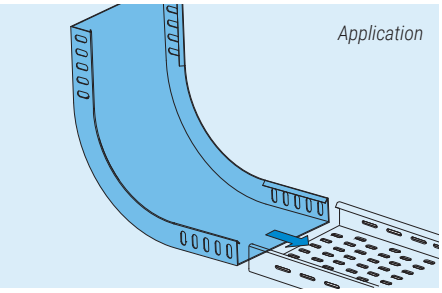

EORCTHD60 | Eurostrut | Outside Riser for Cable Tray ECT60

SPECIFICATIONS

- Carbon steel, standard surface finish is hot dip galvanized (HDG), in accordance with NEN-EN-ISO 1461.
- Thickness layer 60 to 70 µm.
- On request: stainless steel 304 or 316L.
- Accessories must be supported on all sides.
- Standard angle for accessories is 90°.
- Other widths available on request.

INCLUDING

- 8x EFS08x15-GEO Fixing Set (Square Neck Bolt M8x15, Nut and Washer)

	Article number	W mm	H mm	E mm	kg/ unit
●	EIRCTHD60-50-HDG	55	60	1,5	0,98
●	EIRCTHD60-100-HDG	105	60	1,5	1,10
●	EIRCTHD60-200-HDG	205	60	1,5	1,26
●	EIRCTHD60-300-HDG	305	60	2,0	1,90
●	EIRCTHD60-400-HDG	405	60	2,0	2,15
●	EIRCTHD60-500-HDG	505	60	2,0	2,37
●	EIRCTHD60-600-HDG	605	60	2,0	2,60

● In stock ● Limited stock ● On request

Available surface finishes	Change HDG to	Stock
Hot dip galvanized	-	●
Pre galvanized	PG	●
Stainless steel A4 / 316L	SS316	●
Stainless steel A2 / 304	SS304	●

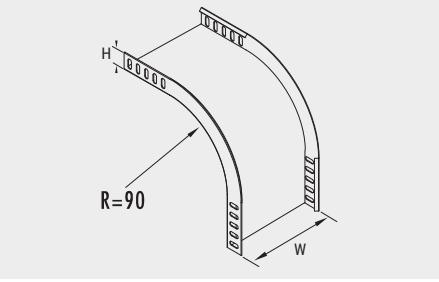

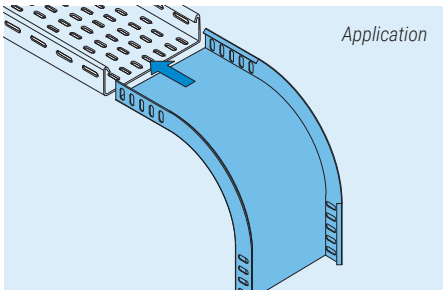

ERRCTHD60 | Eurostrut | Right Reducer for Cable Tray ECT60

SPECIFICATIONS

- Carbon steel, standard surface finish is hot dip galvanized (HDG), in accordance with NEN-EN-ISO 1461.
- Thickness layer 60 to 70 µm.
- On request: stainless steel 304 or 316L.
- Accessories must be supported on all sides.
- Standard angle for accessories is 90°.
- Other widths available on request.

INCLUDING

- 8x EFS08x15-GEO Fixing Set (Square Neck Bolt M8x15, Nut and Washer)

	Article number	A mm	B mm	E mm	kg/ unit
●	ERRCTHD60-100-HDG	100	50	1,5	1,02
●	ERRCTHD60-200-HDG	200	100	1,5	1,20
●	ERRCTHD60-300-HDG	300	200	2,0	1,56
●	ERRCTHD60-400-HDG	400	300	2,0	1,63
●	ERRCTHD60-500-HDG	500	400	2,0	2,09
●	ERRCTHD60-600-HDG	600	500	2,0	2,54

● In stock ● Limited stock ● On request

Available surface finishes	Change HDG to	Stock
Hot dip galvanized	-	●
Pre galvanized	PG	●
Stainless steel A4 / 316L	SS316	●
Stainless steel A2 / 304	SS304	●

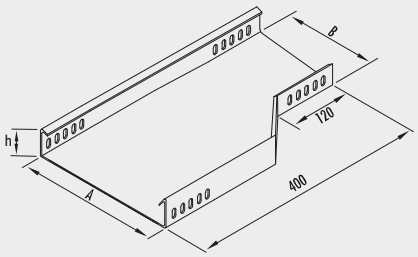

ELRCTHD60 | Eurostrut | Left Reducer for Cable Tray ECT60

SPECIFICATIONS

- Carbon steel, standard surface finish is hot dip galvanized (HDG), in accordance with NEN-EN-ISO 1461.
- Thickness layer 60 to 70 µm.
- On request: stainless steel 304 or 316L.
- Accessories must be supported on all sides.
- Standard angle for accessories is 90°.
- Other widths available on request.

INCLUDING

- 8x EFS08x15-GEO Fixing Set (Square Neck Bolt M8x15, Nut and Washer)

	Article number	A mm	B mm	E mm	kg/ unit
●	ELRCTHD60-100-HDG	100	50	1,5	1,02
●	ELRCTHD60-200-HDG	200	100	1,5	1,20
●	ELRCTHD60-300-HDG	300	200	2,0	1,56
●	ELRCTHD60-400-HDG	400	300	2,0	1,63
●	ELRCTHD60-500-HDG	500	400	2,0	2,09
●	ELRCTHD60-600-HDG	600	500	2,0	2,54

● In stock ● Limited stock ● On request

Available surface finishes	Change HDG to	Stock
Hot dip galvanized	-	●
Pre galvanized	PG	●
Stainless steel A4 / 316L	SS316	●
Stainless steel A2 / 304	SS304	●

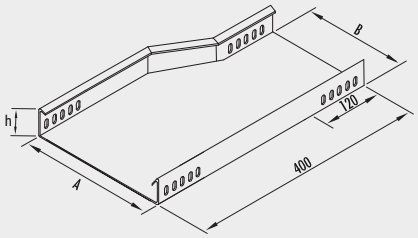

ECRCTHD60 | Eurostrut | Center Reducer for Cable Tray ECT60

SPECIFICATIONS

- Set of left and right piece.
- Carbon steel, standard surface finish is hot dip galvanized (HDG), in accordance with NEN-EN-ISO 1461.
- Thickness layer 60 to 70 µm.
- On request: stainless steel 304 or 316L.
- Other widths available on request.

INCLUDING

- 8x EFS08x15-GEO Fixing Set (Square Neck Bolt M8x15, Nut and Washer)

	Article number	X mm	H mm	E mm	kg/ unit
●	ECRCTHD60-50-HDG	50	54	2	1.80
●	ECRCTHD60-100-HDG	100	54	2	1.96
●	ECRCTHD60-150-HDG	150	54	2	2.08
●	ECRCTHD60-200-HDG	200	54	2	2.12
●	ECRCTHD60-250-HDG	250	54	2	2.22

● In stock ● Limited stock ● On request

Available surface finishes	Change HDG to	Stock
Hot dip galvanized	-	●
Pre galvanized	PG	●
Stainless steel A4 / 316L	SS316	●
Stainless steel A2 / 304	SS304	●

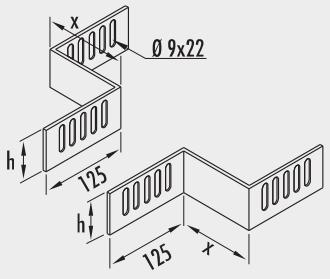

Application

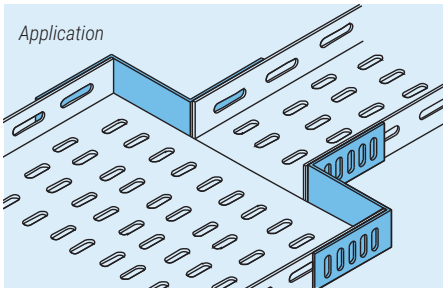

ECTHDSC | Eurostrut | Cover for Cable Tray ECT

SPECIFICATIONS

- For cable trays ECT60 and ECT100.
- Carbon steel, standard surface finish is hot dip galvanized (HDG), in accordance with NEN-EN-ISO 1461.
- Thickness layer 60 to 70 µm.
- Also available in stainless steel 304 or 316L.
- Other widths available on request.

	Article number	W mm	H mm	E mm	kg/ unit
●	ECTHDC50-HDG	55	9	1	0,550
●	ECTHDC100-HDG	105	9	1	1,000
●	ECTHDC200-HDG	205	9	1	1,700
●	ECTHDC300-HDG	305	9	1	2,550
●	ECTHDC400-HDG	405	9	1,5	4,940
●	ECTHDC500-HDG	505	9	1,5	6,150
●	ECTHDC600-HDG	605	9	1,5	7,300

● In stock ● Limited stock ● On request

Available surface finishes	Change HDG to	Stock
Hot dip galvanized	-	●
Pre galvanized	PG	●
Stainless steel A4 / 316L	SS316	●
Stainless steel A2 / 304	SS304	●

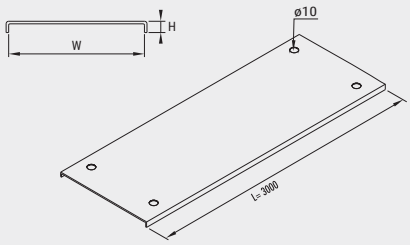

EBCTHDC | Eurostrut | Cover Bend for Cable Tray ECT

SPECIFICATIONS

- For cable trays ECT60 and ECT100.
- Carbon steel, standard surface finish is hot dip galvanized (HDG), in accordance with NEN-EN-ISO 1461.
- Thickness layer 60 to 70 µm.
- Also available in stainless steel 304 or 316L.
- Standard angle for accessories is 90°.
- Other widths available on request.

	Article number	W mm	H mm	E mm	kg/ unit
●	EBCTHDC50-HDG	55	9	1	0,160
●	EBCTHDC100-HDG	105	9	1	0,220
●	EBCTHDC200-HDG	205	9	1	0,540
●	EBCTHDC300-HDG	305	9	1	0,980
●	EBCTHDC400-HDG	405	9	1,5	2,340
●	EBCTHDC500-HDG	505	9	1,5	3,370
●	EBCTHDC600-HDG	605	9	1,5	4,600

● In stock ● Limited stock ● On request

Available surface finishes	Change HDG to	Stock
Hot dip galvanized	-	●
Pre galvanized	PG	●
Stainless steel A4 / 316L	SS316	●
Stainless steel A2 / 304	SS304	●

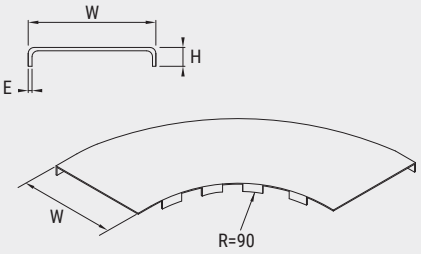

EETCTHDC | Eurostrut | Cover T-Piece for Cable Tray ECT

SPECIFICATIONS

- For cable trays ECT60 and ECT100.
- Carbon steel, standard surface finish is hot dip galvanized (HDG), in accordance with NEN-EN-ISO 1461.
- Thickness layer 60 to 70 µm.
- Also available in stainless steel 304 or 316L.
- Standard angle for accessories is 90°.
- Other widths available on request.

	Article number	W mm	H mm	E mm	kg/ unit
●	ETCTHDC50-HDG	55	9	1	0,260
●	ETCTHDC100-HDG	105	9	1	0,390
●	ETCTHDC200-HDG	205	9	1	0,860
●	ETCTHDC300-HDG	305	9	1	1,480
●	ETCTHDC400-HDG	405	9	1,5	3,420
●	ETCTHDC500-HDG	505	9	1,5	4,830
●	ETCTHDC600-HDG	605	9	1,5	6,480

● In stock ● Limited stock ● On request

Available surface finishes	Change HDG to	Stock
Hot dip galvanized	-	●
Pre galvanized	PG	●
Stainless steel A4 / 316L	SS316	●
Stainless steel A2 / 304	SS304	●

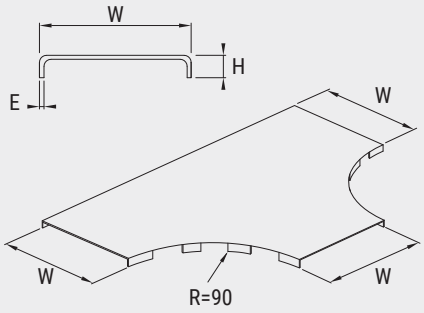

| + 31 10 522 33 51 | info@eurostrut.com | eurostrut.com

ECOCTHDC | Eurostrut | Cover Crossover for Cable Tray ECT

SPECIFICATIONS

- For cable trays ECT60 and ECT100.
- Carbon steel, standard surface finish is hot dip galvanized (HDG), in accordance with NEN-EN-ISO 1461.
- Thickness layer 60 to 70 µm.
- Also available in stainless steel 304 or 316L.
- Standard angle for accessories is 90°.
- Other widths available on request.

	Article number	W mm	H mm	E mm	kg/ unit
●	ECOCTHDC50-HDG	55	9	1	0,320
●	ECOCTHDC100-HDG	105	9	1	0,490
●	ECOCTHDC200-HDG	205	9	1	1,020
●	ECOCTHDC300-HDG	305	9	1	1,710
●	ECOCTHDC400-HDG	405	9	1,5	3,860
●	ECOCTHDC500-HDG	505	9	1,5	5,370
●	ECOCTHDC600-HDG	605	9	1,5	7,110

● In stock ● Limited stock ● On request

Available surface finishes	Change HDG to	Stock
Hot dip galvanized	-	●
Pre galvanized	PG	●
Stainless steel A4 / 316L	SS316	●
Stainless steel A2 / 304	SS304	●

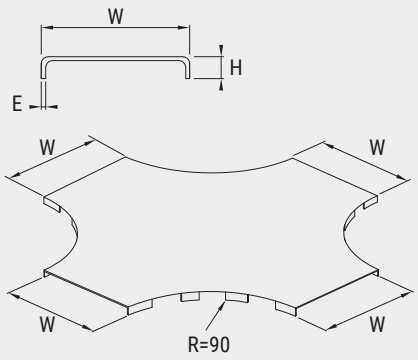

EIRCTHDC | Eurostrut | Cover Inside Riser for Cable Tray ECT

SPECIFICATIONS

- For cable trays ECT60 and ECT100.
- Carbon steel, standard surface finish is hot dip galvanized (HDG), in accordance with NEN-EN-ISO 1461.
- Thickness layer 60 to 70 µm.
- Also available in stainless steel 304 or 316L.
- Standard angle for accessories is 90°.
- Other widths available on request.

	Article number	W mm	H mm	E mm	kg/ unit
●	EIRCTHDC50-HDG	55	9	1	0,130
●	EIRCTHDC100-HDG	105	9	1	0,150
●	EIRCTHDC200-HDG	205	9	1	0,260
●	EIRCTHDC300-HDG	305	9	1	0,370
●	EIRCTHDC400-HDG	405	9	1,5	0,730
●	EIRCTHDC500-HDG	505	9	1,5	0,910
●	EIRCTHDC600-HDG	605	9	1,5	1,100

● In stock ● Limited stock ● On request

Available surface finishes	Change HDG to	Stock
Hot dip galvanized	-	●
Pre galvanized	PG	●
Stainless steel A4 / 316L	SS316	●
Stainless steel A2 / 304	SS304	●

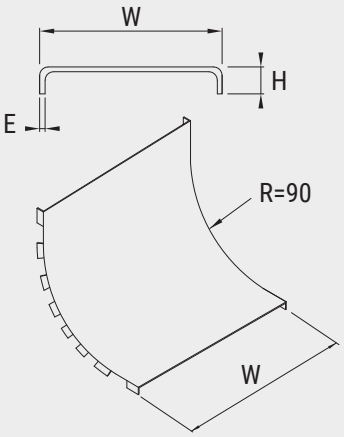

EORCTHDC | Eurostrut | Cover Outside Riser for Cable Tray ECT

SPECIFICATIONS

- For cable trays ECT60 and ECT100.
- Carbon steel, standard surface finish is hot dip galvanized (HDG), in accordance with NEN-EN-ISO 1461.
- Thickness layer 60 to 70 µm.
- Also available in stainless steel 304 or 316L.
- Standard angle for accessories is 90°.
- Other widths available on request.

	Article number	W mm	H mm	E mm	kg/ unit
●	EORCTHDC50-HDG	55	9	1	0,110
●	EORCTHDC100-HDG	105	9	1	0,140
●	EORCTHDC200-HDG	205	9	1	0,250
●	EORCTHDC300-HDG	305	9	1	0,360
●	EORCTHDC400-HDG	405	9	1,5	0,710
●	EORCTHDC500-HDG	505	9	1,5	0,880
●	EORCTHDC600-HDG	605	9	1,5	1,050

● In stock ● Limited stock ● On request

Available surface finishes	Change HDG to	Stock
Hot dip galvanized	-	●
Pre galvanized	PG	●
Stainless steel A4 / 316L	SS316	●
Stainless steel A2 / 304	SS304	●

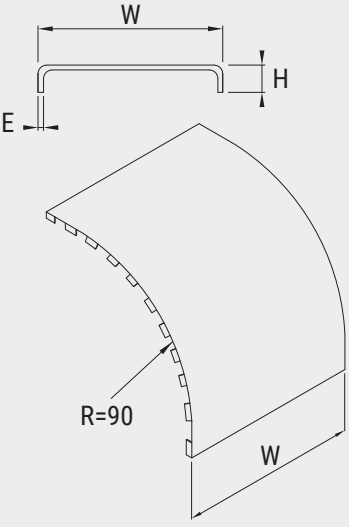



ERRTHDSC | Eurostrut | Cover Right Reducer for Cable Tray ECT

SPECIFICATIONS

- For cable trays ECT60 and ECT100.
- H=9mm.
- Carbon steel, standard surface finish is hot dip galvanized (HDG), in accordance with NEN-EN-ISO 1461.
- Thickness layer 60 to 70 µm.
- Also available in stainless steel 304 or 316L.
- Other widths available on request.

	Article number	A mm	D mm	E mm	kg/ unit
●	ERRTHDC100-HDG	100	50	1,0	0,19
●	ERRTHDC200-HDG	200	100	1,0	0,22
●	ERRTHDC300-HDG	300	200	1,0	0,38
●	ERRTHDC400-HDG	400	300	1,5	0,76
●	ERRTHDC500-HDG	500	400	1,5	0,95
●	ERRTHDC600-HDG	600	500	1,5	1,14

● In stock ● Limited stock ● On request

Available surface finishes	Change HDG to	Stock
Hot dip galvanized	-	●
Pre galvanized	PG	●
Stainless steel A4 / 316L	SS316	●
Stainless steel A2 / 304	SS304	●

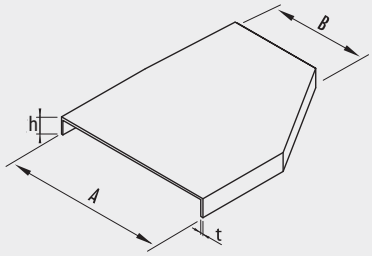

ELRTHDSC | Eurostrut | Cover Left Reducer for Cable Tray ECT

SPECIFICATIONS

- For cable trays ECT60 and ECT100.
- H=9mm.
- Carbon steel, standard surface finish is hot dip galvanized (HDG), in accordance with NEN-EN-ISO 1461.
- Thickness layer 60 to 70 µm.
- Also available in stainless steel 304 or 316L.
- Other widths available on request.

	Article number	A mm	D mm	E mm	kg/ unit
●	ELRTHDC100-HDG	100	50	1,0	0,19
●	ELRTHDC200-HDG	200	100	1,0	0,22
●	ELRTHDC300-HDG	300	200	1,0	0,38
●	ELRTHDC400-HDG	400	300	1,5	0,76
●	ELRTHDC500-HDG	500	400	1,5	0,95
●	ELRTHDC600-HDG	600	500	1,5	1,14

● In stock ● Limited stock ● On request

Available surface finishes	Change HDG to	Stock
Hot dip galvanized	-	●
Pre galvanized	PG	●
Stainless steel A4 / 316L	SS316	●
Stainless steel A2 / 304	SS304	●

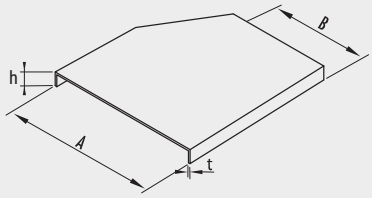

EJPICTHD60 | Eurostrut | Inside Jointing Piece for Cable Tray ECTHD60

SPECIFICATIONS

- Carbon steel, standard surface finish is hot dip galvanized (HDG), in accordance with NEN-EN-ISO 1461.
- Thickness layer 60 to 70 µm.
- On request: stainless steel 304 or 316L.

INCLUDING

- 4x EFS08x15-GEO Fixing Set (Square Neck Bolt M8x15, Nut and Washer)

	Article number	L mm	H mm	E mm	kg/ unit
●	EJPICTHD60-HDG	250	60	2	0,27

● In stock ● Limited stock ● On request

Available surface finishes	Change HDG to	Stock
Hot dip galvanized	-	●
Pre galvanized	PG	●
Stainless steel A4 / 316L	SS316	●
Stainless steel A2 / 304	SS304	●

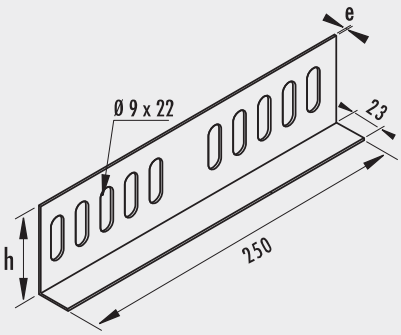

EJPOCTHD60 | Eurostrut | Outside Jointing Piece for Cable Tray ECTHD60

SPECIFICATIONS

- Carbon steel, standard surface finish is hot dip galvanized (HDG), in accordance with NEN-EN-ISO 1461.
- Thickness layer 60 to 70 µm.
- On request: stainless steel 304 or 316L.

INCLUDING

- 4x EFS08x15-GEO Fixing Set (Square Neck Bolt M8x15, Nut and Washer)

	Article number	L mm	H mm	E mm	kg/ unit
●	EJPOCTHD60-HDG	250	64	2	0,33

● In stock ● Limited stock ● On request

Available surface finishes	Change HDG to	Stock
Hot dip galvanized	-	●
Pre galvanized	PG	●
Stainless steel A4 / 316L	SS316	●
Stainless steel A2 / 304	SS304	●

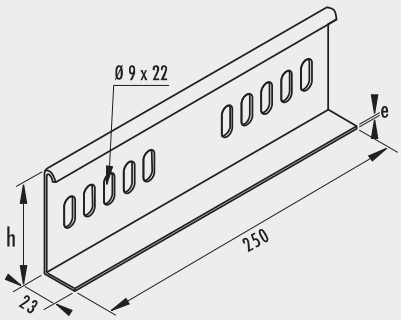

ESL-SB / EFS | Eurostrut | Fixing Set | Square Neck Bolt + Washer + Nut

SPECIFICATIONS

- Surface finish:
  - Hot dip galvanized (H)
  - Stainless steel A4 / 316L (S316)
  - Stainless steel A2 / 304 (S304)
  - Geomet® (GEO)

	Article number	MxL mm	kg/ unit
●	ESL-SB-H	M10x20	0,04
●	ESL-SB-S304	M10x20	0,04
●	ESL-SB-S316	M10x20	0,04
●	EFS06x15-304	M6x15	0,01
●	EFS06x15-316	M6x15	0,01
●	EFS06x15-GEO	M6x15	0,01
●	EFS08x15-304	M8x15	0,014
●	EFS08x15-316	M8x15	0,014
●	EFS08x15-GEO	M8x15	0,014

● In stock ● Limited stock ● On request

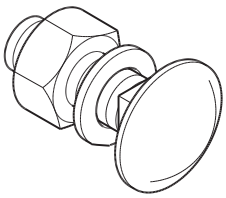

Stay up to date!

Follow **@eurostrut** on social media and sign in to our newsletter:
www.eurostrut.com/en/newsletter





Your total supplier of Cable Management Systems & Solutions

Cable Ladders | Cable Trays |
Marine Ladders | Conduit | Pipe Clamps |
Strut Mounting Systems **& more!**

Visit eurostrut.com for our complete range

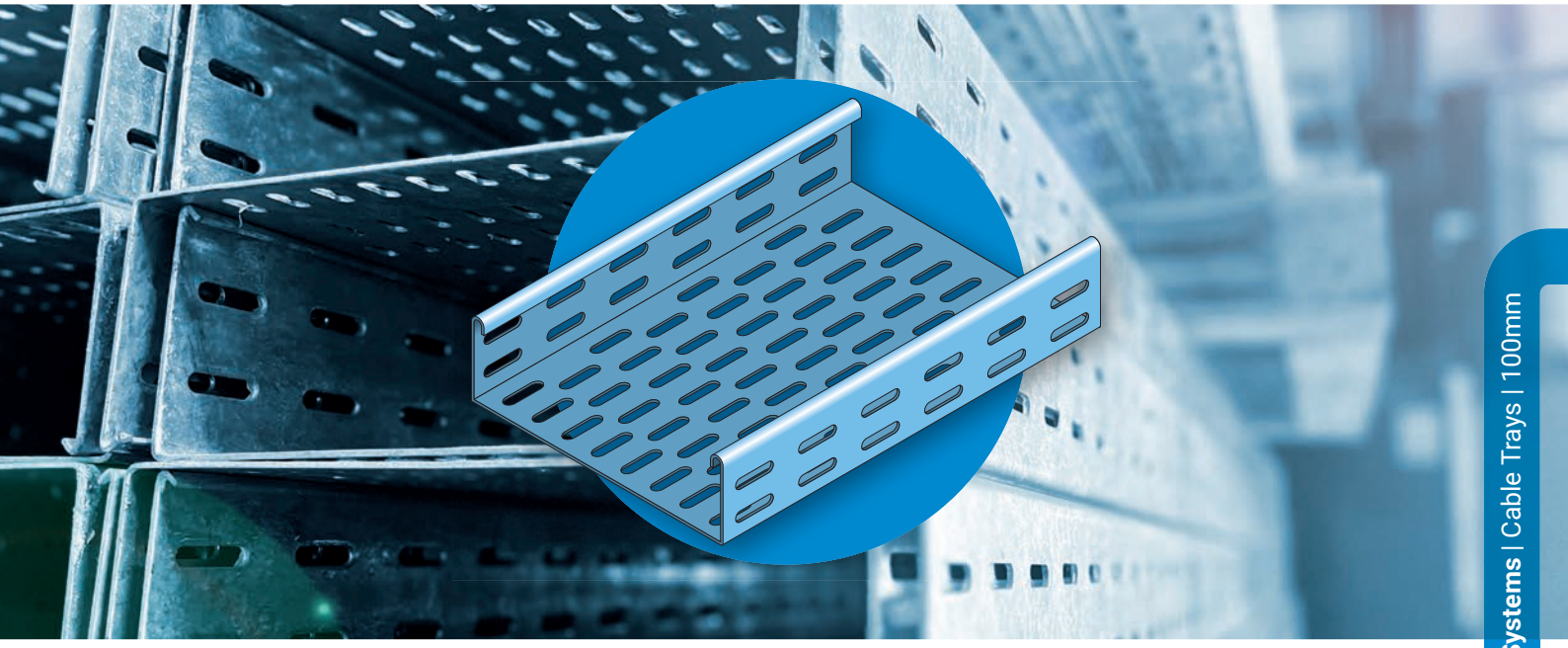

Cable Management Systems
Cable Trays | 100mm
Medium and heavy duty cable tray system for utility construction and industrial environments

General specifications

- The Eurostrut cable tray is manufactured in accordance with BS EN 61537 / IEC 61537.
- Standard material is carbon steel, standard surface finish is hot dip galvanized (HDG), in accordance with NEN-EN-ISO 1461.
- Thickness layer for trays (and most accessories) is 60 to 70 µm.
- (On request) materials also available in stainless steel 304 or 316L.
- Powder coating according to RAL colors possible.
- Accessories must be supported on all sides.
- The standard heights are 60 and 100 mm.
- The standard angle for accessories is 90°.
- The standard radius for accessories is 90 mm.
- Other angles and radii for accessories are available on request.
- Other widths available on request.

General conditions

- Eurostrut Support Systems & Solutions B.V. is not liable for cable trays and accessories that are incorrectly installed or where different parts or maintenance methods are applied.
- Although the product information shown in this catalog is accurate and reliable, Eurostrut Support Systems & Solutions B.V. can not be held responsible and liable for inaccuracies.
- The performance data are specific and may be subject to variations due to normal manufacturing tolerances.
- Eurostrut Support Systems & Solutions B.V. reserves the right to change performance information or specifications at any time without notice.

2ba

The convenience of 2ba

Eurostrut's products are listed with all associated information in 2BA's central article database. Product, price and stock information must be continuously available in order to operate efficiently. The 2BA data pool offers the solution.

2ba.nl

The main advantages of 2BA:

- Design, calculate and order more efficiently because all product and price information comes from the same source.
- Data is directly available via the leading ERP software packages or your own custom system.
- You have your own net purchase prices based on Eurostrut's agreed purchasing conditions.

Eurostrut is **ISO 9001 certified**, ensuring quality management across all processes to meet customer requirements and specifications.

By achieving **step 3** certification on the **CO_2 Performance Ladder**, Eurostrut demonstrates its commitment to environmental responsibility and fostering a healthy living environment.

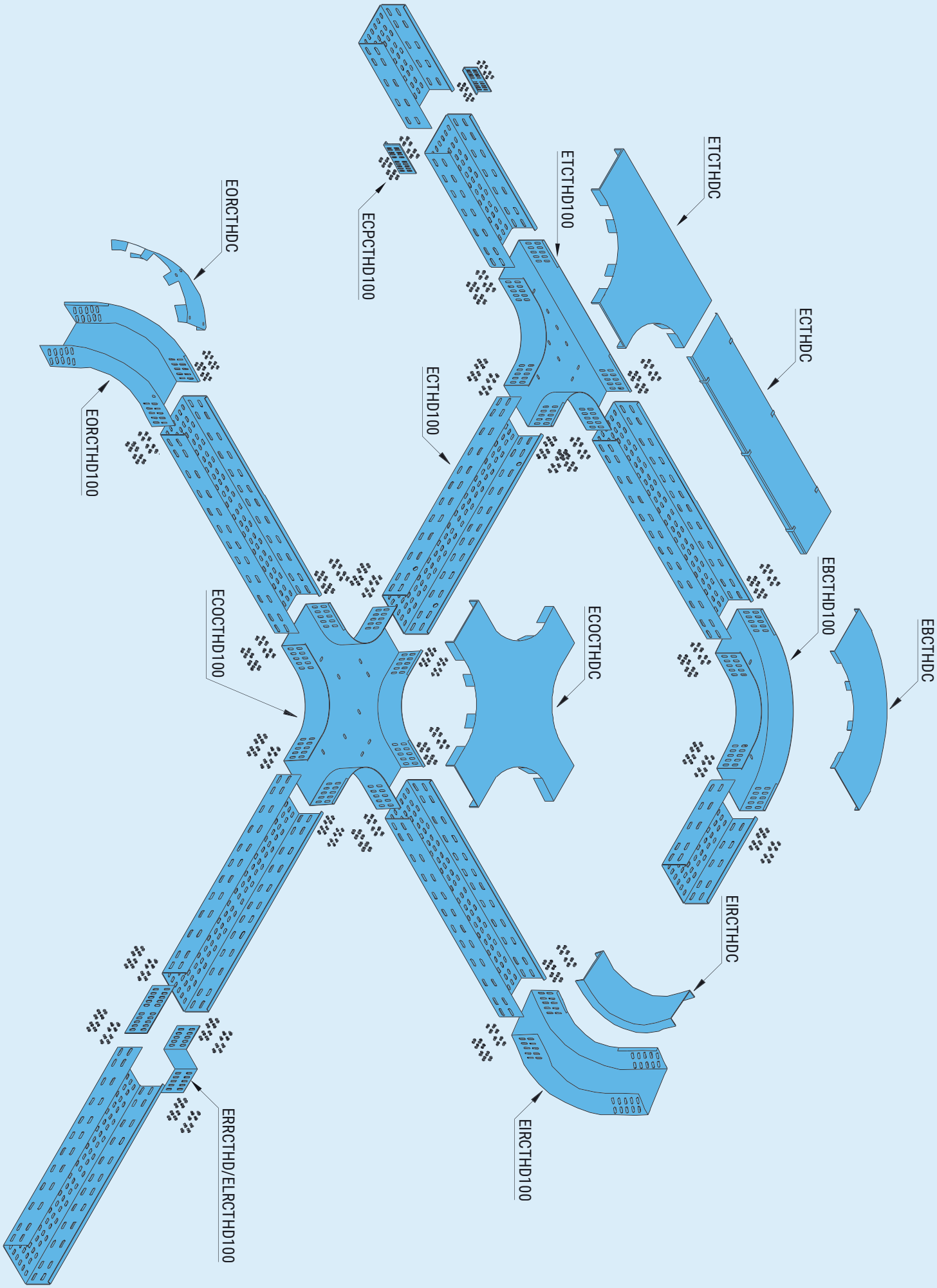
ETCTHDC
ETCTHD100
ECPCTHD100
EORCTHDC
ECTHDC
EORCTHD100
ECTHD100
EBCTHD100
EBCTHDC
ECOCTHD100
ECOCTHDC
EIRCTHDC
EIRCTHD100
ERRCTHD/ELRCTHD100

ECTMDP100 | Eurostrut | Medium Duty Cable Tray Perforated

SPECIFICATIONS

- Medium duty perforated cable tray.
- Carbon steel, standard surface finish is hot dip galvanized (HDG), in accordance with NEN-EN-ISO 1461.
- Thickness layer 60 to 70 µm.
- On request: pre galvanized, stainless steel 304 or 316L.
- Powder coating according to RAL colors possible.
- Accessories must be supported on all sides.
- Standard angle for accessories is 90°.
- Length 3 meter.
- Other widths available on request.

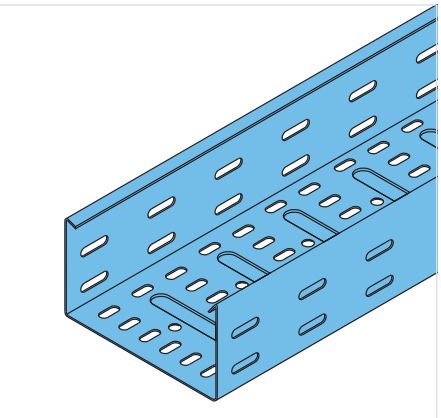

LOAD DATA

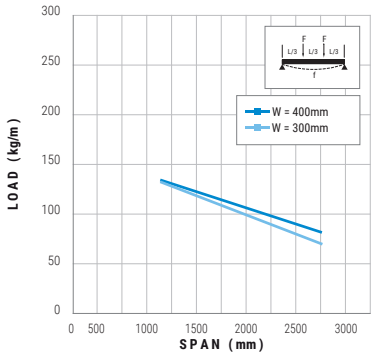

	Article number	W mm	H mm	E mm	kg/ unit
●	ECTHMD100-100-HDG	100	100	1,0	2,55
●	ECTHMD100-200-HDG	200	100	1,0	3,30
●	ECTHMD100-300-HDG	300	100	1,0	4,10
●	ECTHMD100-400-HDG	400	100	1,0	4,90

● In stock ● Limited stock ● On request

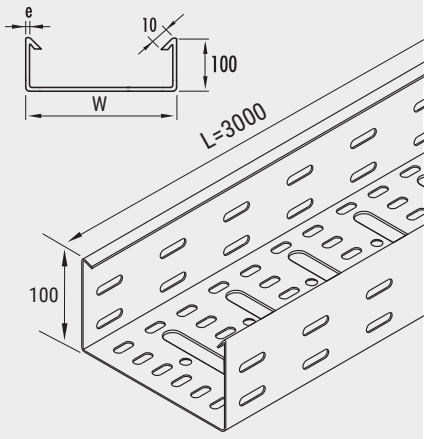

W=100, 200mm

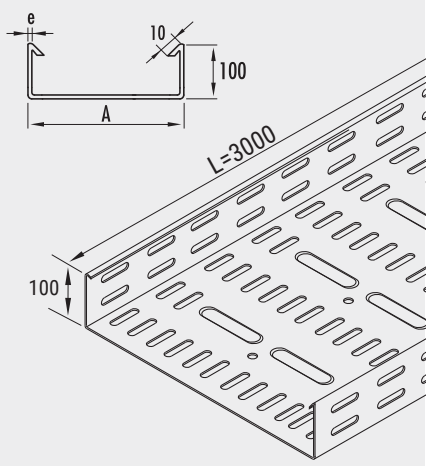

W=300, 400mm

Available surface finishes	Change HDG to	Stock
Hot dip galvanized	-	●
Pre galvanized	PG	●
Stainless steel A4 / 316L	SS316	●
Stainless steel A2 / 304	SS304	●

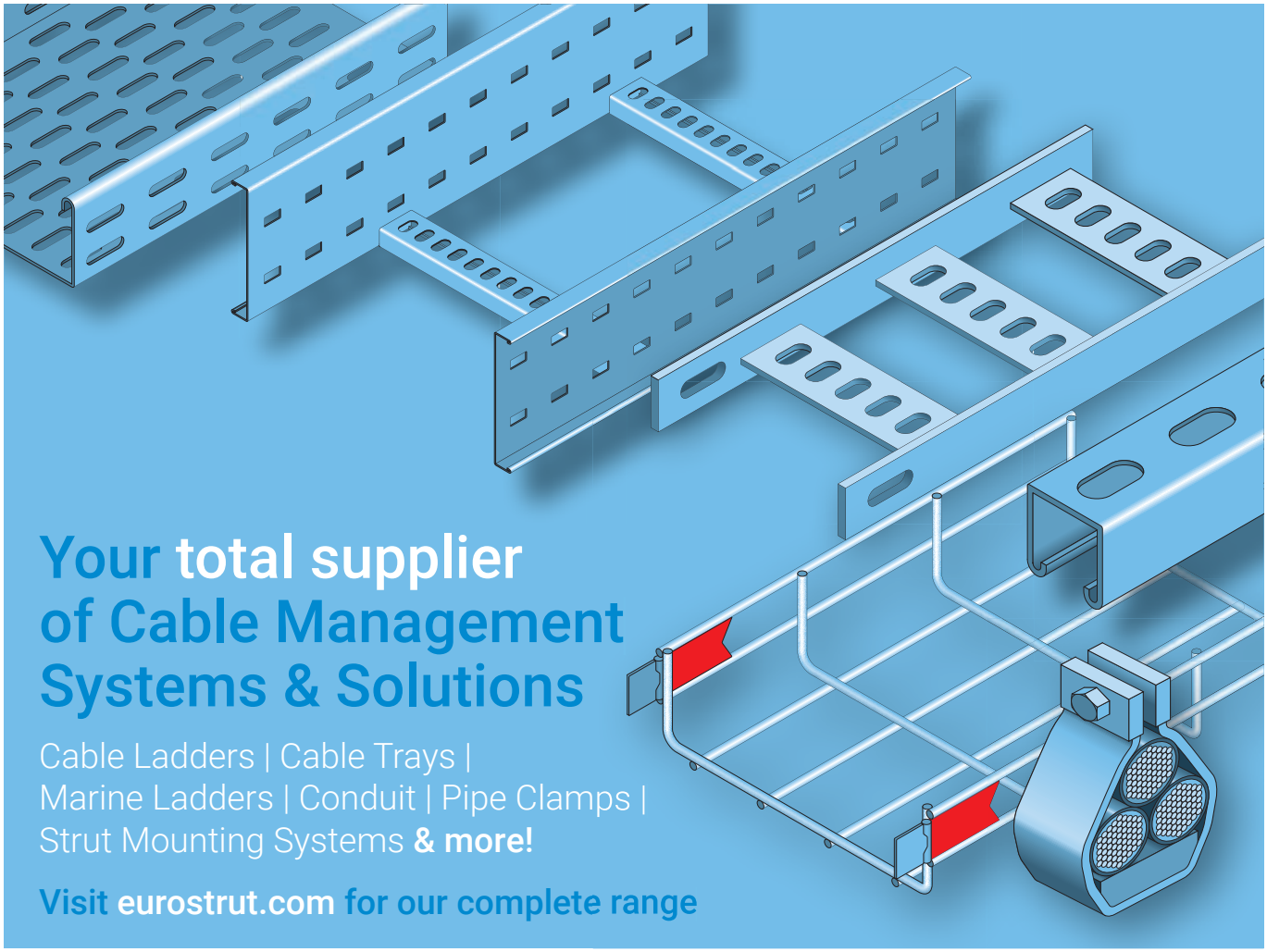

ECTHDP100 | Eurostrut | Heavy Duty Cable Tray Perforated

SPECIFICATIONS

- Heavy duty perforated cable tray.
- Carbon steel, standard surface finish is hot dip galvanized (HDG), in accordance with NEN-EN-ISO 1461.
- Thickness layer 60 to 70 µm.
- On request: stainless steel 304 or 316L.
- Powder coating according to RAL colors possible.
- Accessories must be supported on all sides.
- Standard angle for accessories is 90°.
- Length 3 meter.
- Other widths available on request.

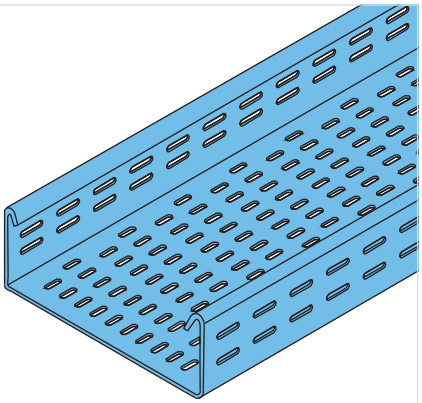

LOAD DATA

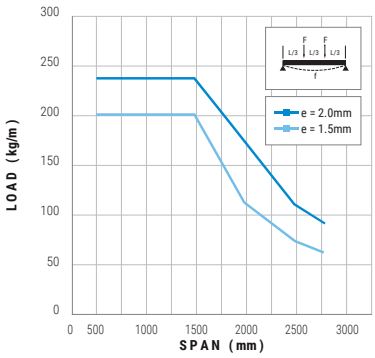

	Article number	W mm	H mm	E mm	kg/ unit
●	ECTHDP100-100-HDG	100	100	1,5	3,6
●	ECTHDP100-200-HDG	200	100	1,5	4,5
●	ECTHDP100-300-HDG	300	100	2	7,55
●	ECTHDP100-400-HDG	400	100	2	8,8
●	ECTHDP100-500-HDG	500	100	2	10,2
●	ECTHDP100-600-HDG	600	100	2	11,9

● In stock ● Limited stock ● On request

Available surface finishes	Change HDG to	Stock
Hot dip galvanized	-	●
Pre galvanized	PG	●
Stainless steel A4 / 316L	SS316	●
Stainless steel A2 / 304	SS304	●

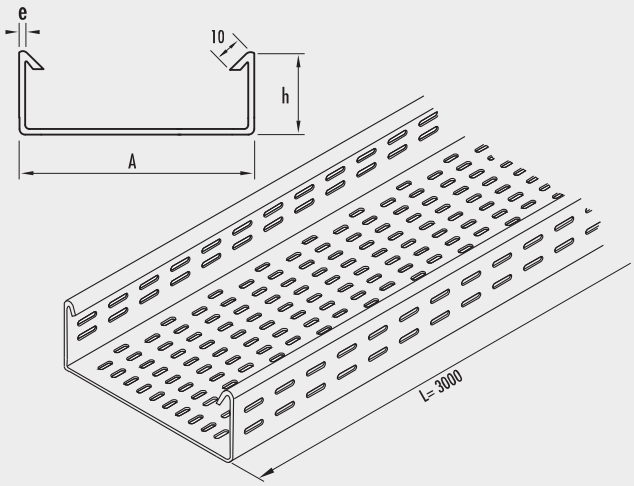

ECTHDNP100 | Eurostrut | Heavy Duty Cable Tray Non-Perforated

SPECIFICATIONS

- Heavy duty cable tray.
- Carbon steel, standard surface finish is hot dip galvanized (HDG), in accordance with NEN-EN-ISO 1461.
- Thickness layer 60 to 70 µm.
- On request: stainless steel 304 or 316L.
- Powder coating according to RAL colors possible.
- Accessories must be supported on all sides.
- Standard angle for accessories is 90°.
- Length 3 meter.
- Other widths available on request.

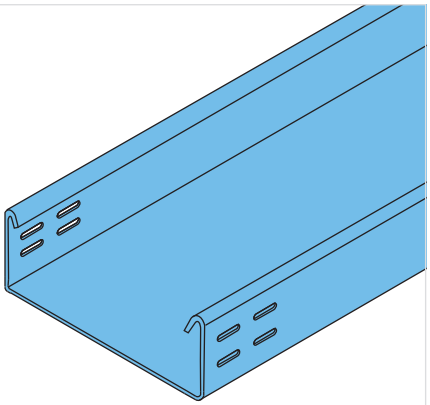

LOAD DATA

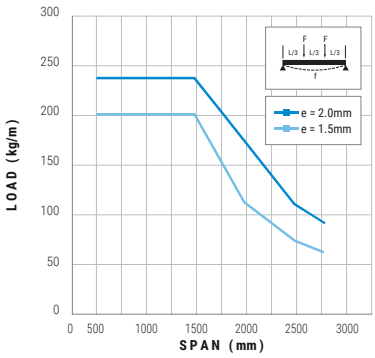

	Article number	W mm	H mm	E mm	kg/ unit
●	ECTHDNP100-100-HDG	100	100	1,5	5,00
●	ECTHDNP100-200-HDG	200	100	1,5	6,35
●	ECTHDNP100-300-HDG	300	100	2	11,55
●	ECTHDNP100-400-HDG	400	100	2	15,90
●	ECTHDNP100-500-HDG	500	100	2	19,10
●	ECTHDNP100-600-HDG	600	100	2	22,20

● In stock ● Limited stock ● On request

Available surface finishes	Change HDG to	Stock
Hot dip galvanized	-	●
Pre galvanized	PG	●
Stainless steel A4 / 316L	SS316	●
Stainless steel A2 / 304	SS304	●

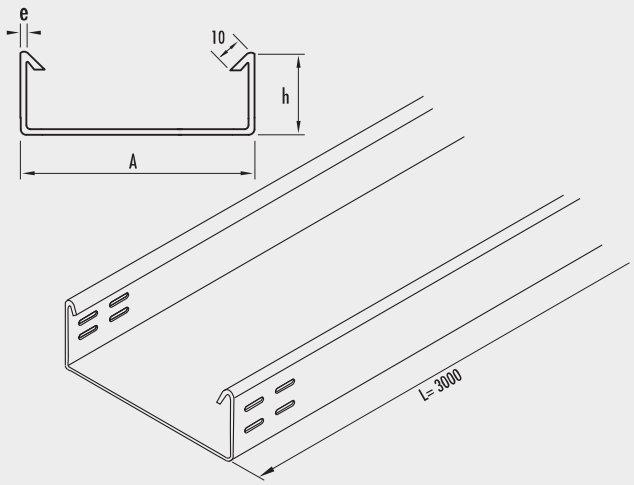

| + 31 10 522 33 51 | info@eurostrut.com | eurostrut.com

EBCTHD100 | Eurostrut | Bend for Cable Tray ECT100

SPECIFICATIONS

- Carbon steel, standard surface finish is hot dip galvanized (HDG), in accordance with NEN-EN-ISO 1461.
- Thickness layer 60 to 70 µm.
- On request: stainless steel 304 or 316L.
- Accessories must be supported on all sides.
- Standard angle for accessories is 90°.
- Other widths available on request.

INCLUDING

- 16x EFS08x15-GEO Fixing Set (Square Neck Bolt M8x15, Nut and Washer)

	Article number	W mm	H mm	E mm	kg/ unit
●	EBCTHD100-100-HDG	105	100	1,5	1,72
●	EBCTHD100-200-HDG	205	100	1,5	2,42
●	EBCTHD100-300-HDG	305	100	2	4,40
●	EBCTHD100-400-HDG	405	100	2	5,82
●	EBCTHD100-500-HDG	505	100	2	7,49
●	EBCTHD100-600-HDG	605	100	2	9,41

● In stock ● Limited stock ● On request

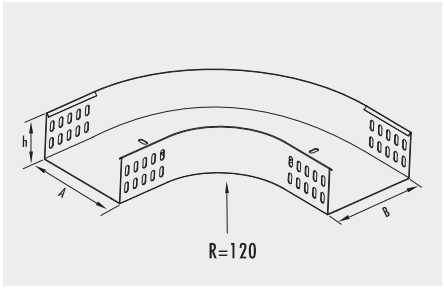

Available surface finishes	Change HDG to	Stock
Hot dip galvanized	-	●
Pre galvanized	PG	●
Stainless steel A4 / 316L	SS316	●
Stainless steel A2 / 304	SS304	●

Application

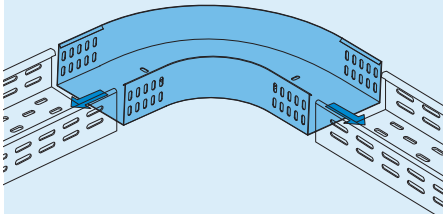

ETCTHD100 | Eurostrut | T-piece for Cable Tray ECT100

SPECIFICATIONS

- Carbon steel, standard surface finish is hot dip galvanized (HDG), in accordance with NEN-EN-ISO 1461.
- Thickness layer 60 to 70 µm.
- On request: stainless steel 304 or 316L.
- Accessories must be supported on all sides.
- Standard angle for accessories is 90°.
- Other widths available on request.

INCLUDING

- 24x EFS08x15-GEO Fixing Set (Square Neck Bolt M8x15, Nut and Washer)

	Article number	W mm	H mm	E mm	kg/ unit
●	ETCTHD100-100-HDG	105	100	1,5	2,53
●	ETCTHD100-200-HDG	205	100	1,5	3,37
●	ETCTHD100-300-HDG	305	100	2	5,92
●	ETCTHD100-400-HDG	405	100	2	7,67
●	ETCTHD100-500-HDG	505	100	2	9,73
●	ETCTHD100-600-HDG	605	100	2	12,11

● In stock ● Limited stock ● On request

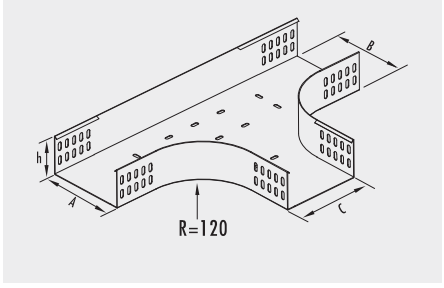

Available surface finishes	Change HDG to	Stock
Hot dip galvanized	-	●
Pre galvanized	PG	●
Stainless steel A4 / 316L	SS316	●
Stainless steel A2 / 304	SS304	●

Application

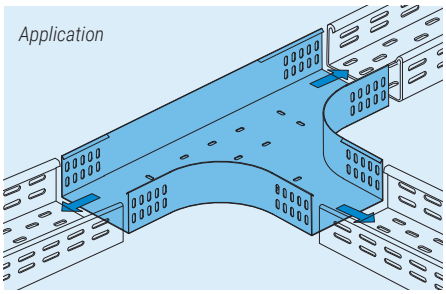

ECOCTHD100 | Eurostrut | Crossover for Cable Tray ECT100

SPECIFICATIONS

- Carbon steel, standard surface finish is hot dip galvanized (HDG), in accordance with NEN-EN-ISO 1461.
- Thickness layer 60 to 70 µm.
- On request: stainless steel 304 or 316L.
- Accessories must be supported on all sides.
- Standard angle for accessories is 90°.
- Other widths available on request.

INCLUDING

- 32x EFS08x15-GEO Fixing Set (Square Neck Bolt M8x15, Nut and Washer)

	Article number	W mm	H mm	E mm	kg/ unit
●	ECOCTHD100-100-HDG	105	100	1,5	3,06
●	ECOCTHD100-200-HDG	205	100	1,5	3,86
●	ECOCTHD100-300-HDG	305	100	2	6,36
●	ECOCTHD100-400-HDG	405	100	2	8,05
●	ECOCTHD100-500-HDG	505	100	2	10,05
●	ECOCTHD100-600-HDG	605	100	2	12,36

● In stock ● Limited stock ● On request

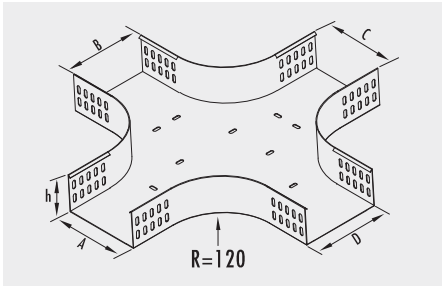

Available surface finishes	Change HDG to	Stock
Hot dip galvanized	-	●
Pre galvanized	PG	●
Stainless steel A4 / 316L	SS316	●
Stainless steel A2 / 304	SS304	●

Application

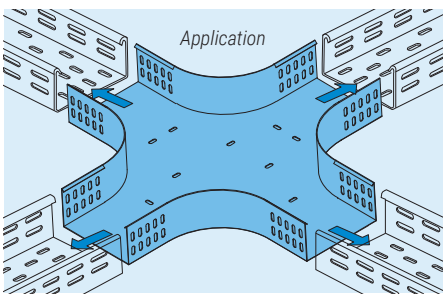

EIRCTHD100 | Eurostrut | Inside Riser for Cable Tray ECT100

SPECIFICATIONS

- Carbon steel, standard surface finish is hot dip galvanized (HDG), in accordance with NEN-EN-ISO 1461.
- Thickness layer 60 to 70 µm.
- On request: stainless steel 304 or 316L.
- Accessories must be supported on all sides.
- Standard angle for accessories is 90°.
- Other widths available on request.

INCLUDING

- 16x EFS08x15-GEO Fixing Set (Square Neck Bolt M8x15, Nut and Washer)

	Article number	W mm	H mm	E mm	kg/ unit
●	EIRCTHD100-100-HDG	105	100	1,5	1,86
●	EIRCTHD100-200-HDG	205	100	1,5	2,23
●	EIRCTHD100-300-HDG	305	100	2	3,45
●	EIRCTHD100-400-HDG	405	100	2	3,94
●	EIRCTHD100-500-HDG	505	100	2	4,43
●	EIRCTHD100-600-HDG	605	100	2	4,92

● In stock ● Limited stock ● On request

Available surface finishes	Change HDG to	Stock
Hot dip galvanized	-	●
Pre galvanized	PG	●
Stainless steel A4 / 316L	SS316	●
Stainless steel A2 / 304	SS304	●

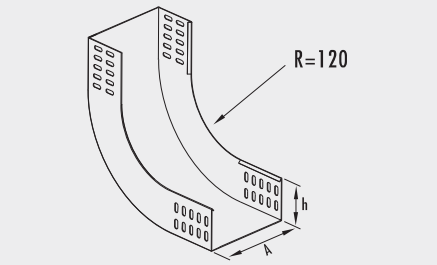

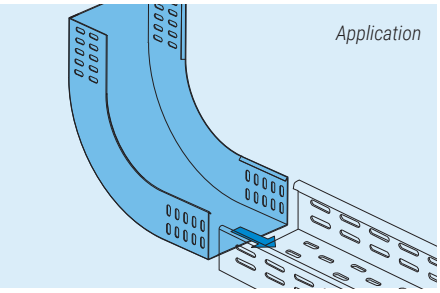

EORCTHD100 | Eurostrut | Outside Riser for Cable Tray ECT100

SPECIFICATIONS

- Carbon steel, standard surface finish is hot dip galvanized (HDG), in accordance with NEN-EN-ISO 1461.
- Thickness layer 60 to 70 µm.
- On request: stainless steel 304 or 316L.
- Accessories must be supported on all sides.
- Standard angle for accessories is 90°.
- Other widths available on request.

INCLUDING

- 16x EFS08x15-GEO Fixing Set (Square Neck Bolt M8x15, Nut and Washer)

	Article number	W mm	H mm	E mm	kg/ unit
●	EIRCTHD100-100-HDG	105	100	1,5	1,58
●	EIRCTHD100-200-HDG	205	100	1,5	1,75
●	EIRCTHD100-300-HDG	305	100	2,0	2,57
●	EIRCTHD100-400-HDG	405	100	2,0	2,80
●	EIRCTHD100-500-HDG	505	100	2,0	3,03
●	EIRCTHD100-600-HDG	605	100	2,0	3,26

● In stock ● Limited stock ● On request

Available surface finishes	Change HDG to	Stock
Hot dip galvanized	-	●
Pre galvanized	PG	●
Stainless steel A4 / 316L	SS316	●
Stainless steel A2 / 304	SS304	●

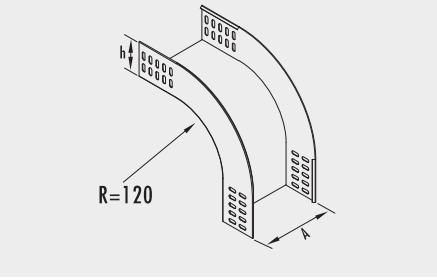

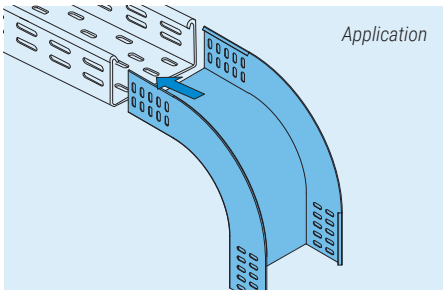



ERRCTHD100 | Eurostrut | Right Reducer for Cable Tray ECT100

SPECIFICATIONS

- Carbon steel, standard surface finish is hot dip galvanized (HDG), in accordance with NEN-EN-ISO 1461.
- Thickness layer 60 to 70 µm.
- On request: stainless steel 304 or 316L.
- Accessories must be supported on all sides.
- Standard angle for accessories is 90°.
- Other widths available on request.

INCLUDING

- 16x EFS08x15-GEO Fixing Set (Square Neck Bolt M8x15, Nut and Washer)

	Article number	A mm	B mm	E mm	kg/ unit
●	ERRCTHD100-200-HDG	200	100		
●	ERRCTHD100-300-HDG	300	200		
●	ERRCTHD100-400-HDG	400	300		
●	ERRCTHD100-500-HDG	500	400		
●	ERRCTHD100-600-HDG	600	500		

● In stock ● Limited stock ● On request

Available surface finishes	Change HDG to	Stock
Hot dip galvanized	-	●
Pre galvanized	PG	●
Stainless steel A4 / 316L	SS316	●
Stainless steel A2 / 304	SS304	●

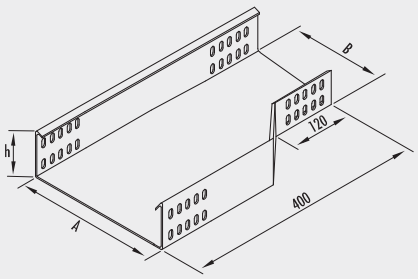

ELRCTHD100 | Eurostrut | Left Reducer for Cable Tray ECT100

SPECIFICATIONS

- Carbon steel, standard surface finish is hot dip galvanized (HDG), in accordance with NEN-EN-ISO 1461.
- Thickness layer 60 to 70 µm.
- On request: stainless steel 304 or 316L.
- Accessories must be supported on all sides.
- Standard angle for accessories is 90°.
- Other widths available on request.

INCLUDING

- 16x EFS08x15-GEO Fixing Set (Square Neck Bolt M8x15, Nut and Washer)

	Article number	A mm	B mm	E mm	kg/ unit
●	ELRCTHD100-200-HDG	200	100		
●	ELRCTHD100-300-HDG	300	200		
●	ELRCTHD100-400-HDG	400	300		
●	ELRCTHD100-500-HDG	500	400		
●	ELRCTHD100-600-HDG	600	500		

● In stock ● Limited stock ● On request

Available surface finishes	Change HDG to	Stock
Hot dip galvanized	-	●
Pre galvanized	PG	●
Stainless steel A4 / 316L	SS316	●
Stainless steel A2 / 304	SS304	●

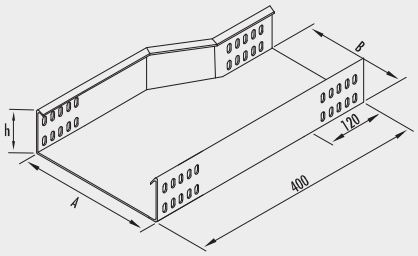

ECRCTHD100 | Eurostrut | Center Reducer for Cable Tray ECT100

SPECIFICATIONS

- Set of left and right piece.
- Carbon steel, standard surface finish is hot dip galvanized (HDG), in accordance with NEN-EN-ISO 1461.
- Thickness layer 60 to 70 µm.
- On request: stainless steel 304 or 316L.
- Other widths available on request.

INCLUDING

- 16x EFS08x15-GEO Fixing Set (Square Neck Bolt M8x15, Nut and Washer)

	Article number	X mm	H mm	E mm	kg/ unit
●	ECRCTHD100-50-HDG	50	94	2	1.48
●	ECRCTHD100-100-HDG	100	94	2	1.64
●	ECRCTHD100-150-HDG	150	94	2	1.82
●	ECRCTHD100-200-HDG	200	94	2	2.00
●	ECRCTHD100-250-HDG	250	94	2	2.14

● In stock ● Limited stock ● On request

Available surface finishes	Change HDG to	Stock
Hot dip galvanized	-	●
Pre galvanized	PG	●
Stainless steel A4 / 316L	SS316	●
Stainless steel A2 / 304	SS304	●

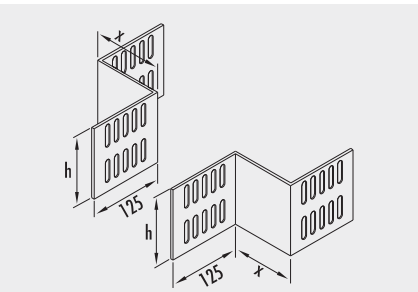

Application

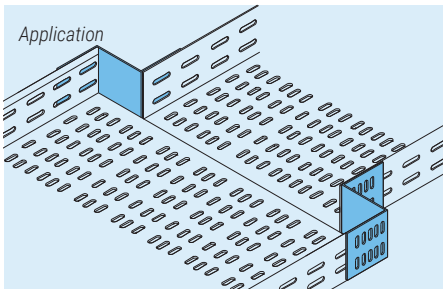

ECTHDSC | Eurostrut | Cover for Cable Tray ECT

SPECIFICATIONS

- For cable trays ECT60 and ECT100.
- Carbon steel, standard surface finish is hot dip galvanized (HDG), in accordance with NEN-EN-ISO 1461.
- Thickness layer 60 to 70 µm.
- Also available in stainless steel 304 or 316L.
- Other widths available on request.

	Article number	W mm	H mm	E mm	kg/ unit
●	ECTHDC50-HDG	55	9	1	0,550
●	ECTHDC100-HDG	105	9	1	1,000
●	ECTHDC200-HDG	205	9	1	1,700
●	ECTHDC300-HDG	305	9	1	2,550
●	ECTHDC400-HDG	405	9	1,5	4,940
●	ECTHDC500-HDG	505	9	1,5	6,150
●	ECTHDC600-HDG	605	9	1,5	7,300

● In stock ● Limited stock ● On request

Available surface finishes	Change HDG to	Stock
Hot dip galvanized	-	●
Pre galvanized	PG	●
Stainless steel A4 / 316L	SS316	●
Stainless steel A2 / 304	SS304	●

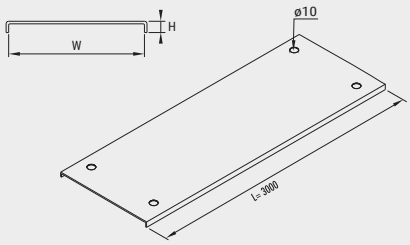

EBCTHDC | Eurostrut | Cover Bend for Cable Tray ECT

SPECIFICATIONS

- For cable trays ECT60 and ECT100.
- Carbon steel, standard surface finish is hot dip galvanized (HDG), in accordance with NEN-EN-ISO 1461.
- Thickness layer 60 to 70 µm.
- Also available in stainless steel 304 or 316L.
- Standard angle for accessories is 90°.
- Other widths available on request.

	Article number	W mm	H mm	E mm	kg/ unit
●	EBCTHDC50-HDG	55	9	1	0,160
●	EBCTHDC100-HDG	105	9	1	0,220
●	EBCTHDC200-HDG	205	9	1	0,540
●	EBCTHDC300-HDG	305	9	1	0,980
●	EBCTHDC400-HDG	405	9	1,5	2,340
●	EBCTHDC500-HDG	505	9	1,5	3,370
●	EBCTHDC600-HDG	605	9	1,5	4,600

● In stock ● Limited stock ● On request

Available surface finishes	Change HDG to	Stock
Hot dip galvanized	-	●
Pre galvanized	PG	●
Stainless steel A4 / 316L	SS316	●
Stainless steel A2 / 304	SS304	●

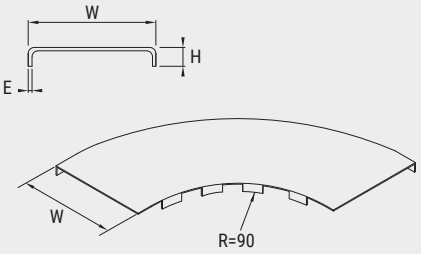

EETCTHDC | Eurostrut | Cover T-Piece for Cable Tray ECT

SPECIFICATIONS

- For cable trays ECT60 and ECT100.
- Carbon steel, standard surface finish is hot dip galvanized (HDG), in accordance with NEN-EN-ISO 1461.
- Thickness layer 60 to 70 µm.
- Also available in stainless steel 304 or 316L.
- Standard angle for accessories is 90°.
- Other widths available on request.

	Article number	W mm	H mm	E mm	kg/ unit
●	ETCTHDC50-HDG	55	9	1	0,260
●	ETCTHDC100-HDG	105	9	1	0,390
●	ETCTHDC200-HDG	205	9	1	0,860
●	ETCTHDC300-HDG	305	9	1	1,480
●	ETCTHDC400-HDG	405	9	1,5	3,420
●	ETCTHDC500-HDG	505	9	1,5	4,830
●	ETCTHDC600-HDG	605	9	1,5	6,480

● In stock ● Limited stock ● On request

Available surface finishes	Change HDG to	Stock
Hot dip galvanized	-	●
Pre galvanized	PG	●
Stainless steel A4 / 316L	SS316	●
Stainless steel A2 / 304	SS304	●

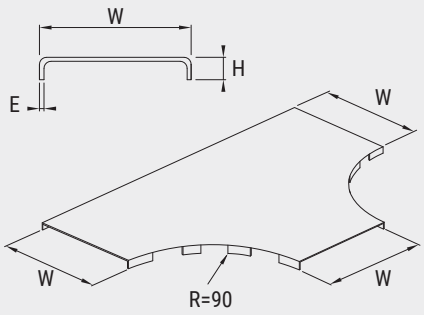

ECOCTHDC | Eurostrut | Cover Crossover for Cable Tray ECT

SPECIFICATIONS

- For cable trays ECT60 and ECT100.
- Carbon steel, standard surface finish is hot dip galvanized (HDG), in accordance with NEN-EN-ISO 1461.
- Thickness layer 60 to 70 µm.
- Also available in stainless steel 304 or 316L.
- Standard angle for accessories is 90°.
- Other widths available on request.

	Article number	W mm	H mm	E mm	kg/ unit
●	ECOCTHDC50-HDG	55	9	1	0,320
●	ECOCTHDC100-HDG	105	9	1	0,490
●	ECOCTHDC200-HDG	205	9	1	1,020
●	ECOCTHDC300-HDG	305	9	1	1,710
●	ECOCTHDC400-HDG	405	9	1,5	3,860
●	ECOCTHDC500-HDG	505	9	1,5	5,370
●	ECOCTHDC600-HDG	605	9	1,5	7,110

● In stock ● Limited stock ● On request

Available surface finishes	Change HDG to	Stock
Hot dip galvanized	-	●
Pre galvanized	PG	●
Stainless steel A4 / 316L	SS316	●
Stainless steel A2 / 304	SS304	●

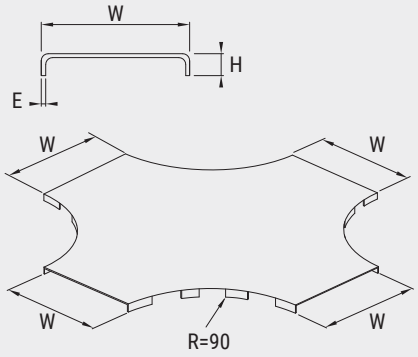

EIRCTHDC | Eurostrut | Cover Inside Riser for Cable Tray ECT

SPECIFICATIONS

- For cable trays ECT60 and ECT100.
- Carbon steel, standard surface finish is hot dip galvanized (HDG), in accordance with NEN-EN-ISO 1461.
- Thickness layer 60 to 70 µm.
- Also available in stainless steel 304 or 316L.
- Standard angle for accessories is 90°.
- Other widths available on request.

	Article number	W mm	H mm	E mm	kg/ unit
●	EIRCTHDC50-HDG	55	9	1	0,130
●	EIRCTHDC100-HDG	105	9	1	0,150
●	EIRCTHDC200-HDG	205	9	1	0,260
●	EIRCTHDC300-HDG	305	9	1	0,370
●	EIRCTHDC400-HDG	405	9	1,5	0,730
●	EIRCTHDC500-HDG	505	9	1,5	0,910
●	EIRCTHDC600-HDG	605	9	1,5	1,100

● In stock ● Limited stock ● On request

Available surface finishes	Change HDG to	Stock
Hot dip galvanized	-	●
Pre galvanized	PG	●
Stainless steel A4 / 316L	SS316	●
Stainless steel A2 / 304	SS304	●

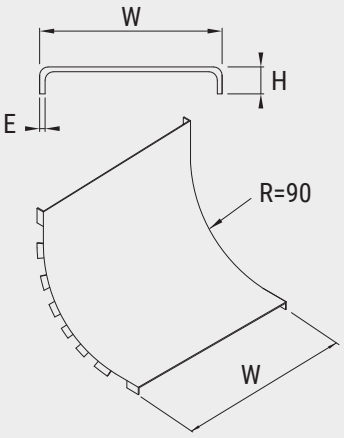

EORCTHDC | Eurostrut | Cover Outside Riser for Cable Tray ECT

SPECIFICATIONS

- For cable trays ECT60 and ECT100.
- Carbon steel, standard surface finish is hot dip galvanized (HDG), in accordance with NEN-EN-ISO 1461.
- Thickness layer 60 to 70 µm.
- Also available in stainless steel 304 or 316L.
- Standard angle for accessories is 90°.
- Other widths available on request.

	Article number	W mm	H mm	E mm	kg/ unit
●	EORCTHDC50-HDG	55	9	1	0,110
●	EORCTHDC100-HDG	105	9	1	0,140
●	EORCTHDC200-HDG	205	9	1	0,250
●	EORCTHDC300-HDG	305	9	1	0,360
●	EORCTHDC400-HDG	405	9	1,5	0,710
●	EORCTHDC500-HDG	505	9	1,5	0,880
●	EORCTHDC600-HDG	605	9	1,5	1,050

● In stock ● Limited stock ● On request

Available surface finishes	Change HDG to	Stock
Hot dip galvanized	-	●
Pre galvanized	PG	●
Stainless steel A4 / 316L	SS316	●
Stainless steel A2 / 304	SS304	●

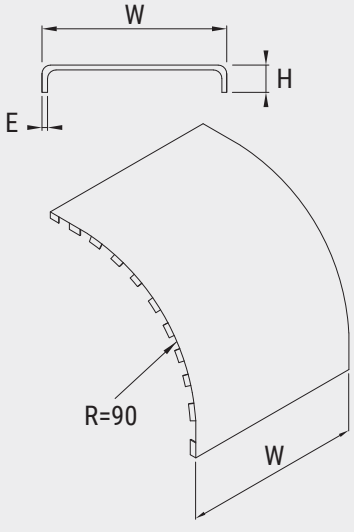



Stay up to date!

Follow **@eurostrut**
on social media and
sign in to our newsletter:
www.eurostrut.com/en/newsletter

ERRTHDSC | Eurostrut | Cover Right Reducer for Cable Tray ECT

SPECIFICATIONS

- For cable trays ECT60 and ECT100.
- H=9mm.
- Carbon steel, standard surface finish is hot dip galvanized (HDG), in accordance with NEN-EN-ISO 1461.
- Thickness layer 60 to 70 µm.
- Also available in stainless steel 304 or 316L.
- Other widths available on request.

	Article number	A mm	D mm	E mm	kg/ unit
●	ERRTHDC100-HDG	100	50	1,0	0,19
●	ERRTHDC200-HDG	200	100	1,0	0,22
●	ERRTHDC300-HDG	300	200	1,0	0,38
●	ERRTHDC400-HDG	400	300	1,5	0,76
●	ERRTHDC500-HDG	500	400	1,5	0,95
●	ERRTHDC600-HDG	600	500	1,5	1,14

● In stock ● Limited stock ● On request

Available surface finishes	Change HDG to	Stock
Hot dip galvanized	-	●
Pre galvanized	PG	●
Stainless steel A4 / 316L	SS316	●
Stainless steel A2 / 304	SS304	●

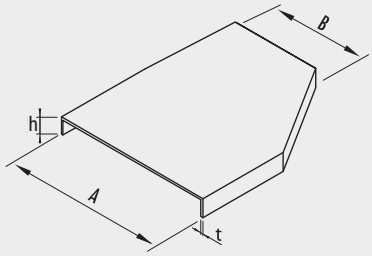

ELRTHDSC | Eurostrut | Cover Left Reducer for Cable Tray ECT

SPECIFICATIONS

- For cable trays ECT60 and ECT100.
- H=9mm.
- Carbon steel, standard surface finish is hot dip galvanized (HDG), in accordance with NEN-EN-ISO 1461.
- Thickness layer 60 to 70 µm.
- Also available in stainless steel 304 or 316L.
- Other widths available on request.

	Article number	A mm	D mm	E mm	kg/ unit
●	ELRTHDC100-HDG	100	50	1,0	0,19
●	ELRTHDC200-HDG	200	100	1,0	0,22
●	ELRTHDC300-HDG	300	200	1,0	0,38
●	ELRTHDC400-HDG	400	300	1,5	0,76
●	ELRTHDC500-HDG	500	400	1,5	0,95
●	ELRTHDC600-HDG	600	500	1,5	1,14

● In stock ● Limited stock ● On request

Available surface finishes	Change HDG to	Stock
Hot dip galvanized	-	●
Pre galvanized	PG	●
Stainless steel A4 / 316L	SS316	●
Stainless steel A2 / 304	SS304	●

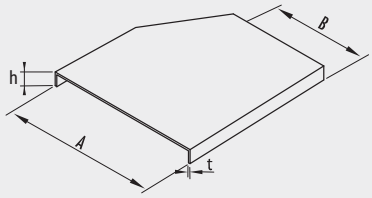

EJPICTHD100 | Eurostrut | Inside Jointing Piece for Cable Tray ECTHD100

SPECIFICATIONS

- Carbon steel, standard surface finish is hot dip galvanized (HDG), in accordance with NEN-EN-ISO 1461.
- Thickness layer 60 to 70 µm.
- On request: stainless steel 304 or 316L.

INCLUDING

- 8x EFS08x15-GEO Fixing Set (Square Neck Bolt M8x15, Nut and Washer)

	Article number	L mm	H mm	E mm	kg/ unit
●	EJPICTHD100-HDG	250	100	2	0,42

● In stock ● Limited stock ● On request

Available surface finishes	Change HDG to	Stock
Hot dip galvanized	-	●
Pre galvanized	PG	●
Stainless steel A4 / 316L	SS316	●
Stainless steel A2 / 304	SS304	●

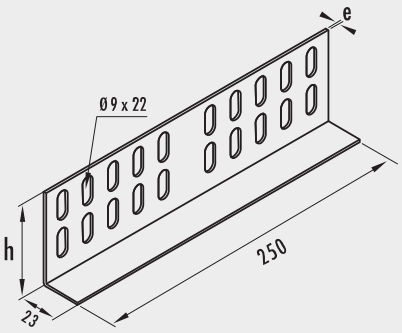

EJPOCTHD100 | Eurostrut | Outside Jointing Piece for Cable Tray ECTHD100

SPECIFICATIONS

- Carbon steel, standard surface finish is hot dip galvanized (HDG), in accordance with NEN-EN-ISO 1461.
- Thickness layer 60 to 70 µm.
- On request: stainless steel 304 or 316L.

INCLUDING

- 8x EFS08x15-GEO Fixing Set (Square Neck Bolt M8x15, Nut and Washer)

	Article number	L mm	H mm	E mm	kg/ unit
●	EJPOCTHD100-HDG	250	64	2	0,56

● In stock ● Limited stock ● On request

Available surface finishes	Change HDG to	Stock
Hot dip galvanized	-	●
Pre galvanized	PG	●
Stainless steel A4 / 316L	SS316	●
Stainless steel A2 / 304	SS304	●

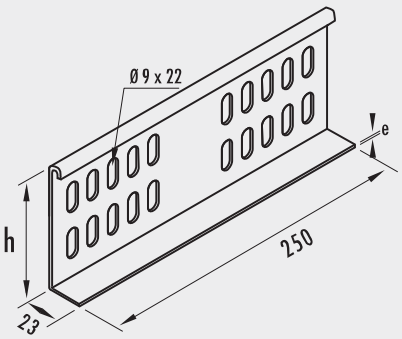

ESL-SB / EFS | Eurostrut | Fixing Set | Square Neck Bolt + Washer + Nut

SPECIFICATIONS

- Surface finish:
  - Hot dip galvanized (H)
  - Stainless steel A4 / 316L (S316)
  - Stainless steel A2 / 304 (S304)
  - Geomet® (GEO)

	Article number	MxL mm	kg/ unit
●	ESL-SB-H	M10x20	0,04
●	ESL-SB-S304	M10x20	0,04
●	ESL-SB-S316	M10x20	0,04
●	EFS06x15-304	M6x15	0,01
●	EFS06x15-316	M6x15	0,01
●	EFS06x15-GEO	M6x15	0,01
●	EFS08x15-304	M8x15	0,014
●	EFS08x15-316	M8x15	0,014
●	EFS08x15-GEO	M8x15	0,014

● In stock ● Limited stock ● On request

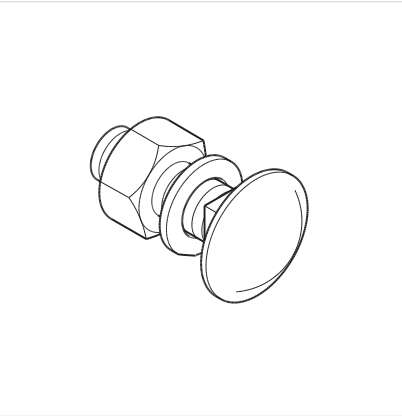

That's why Eurostrut

Eurostrut produces and sells cable support and strut mounting systems for use in demanding environments. We supply installation companies and other technically oriented companies. Our products are used in markets such as offshore, chemicals, petrochemicals, heavy industry, energy and combined heat and power plants. With more than 20 years of knowledge and experience, we are happy to advise you on the most suitable solution for your project.



Customized solutions: over **20 YEARS** experience

With more than 20 years of knowledge and experience, Eurostrut is a household name in the market. Did you run into problems and do you need tailor-made advice? No problem. We offer a custom solution for every challenge.



Small-scale and **INVOLVED**

As an independent organization we have a small team of committed employees who are always ready to assist you. We take our pride in quick responses through the phone or email. You can easily place your orders by phone, email or via our website.



Fast delivery with **OWN TRANSPORT SERVICE**

Did you need something urgently? That's not a problem. With our own transport service we deliver your orders quickly and efficiently to any location. We can offer same day delivery, just give us a call to discuss the possibilities.



High quality **OWN BRAND**

All our products meet the highest requirements and are subjected to an extensive inspection upon arrival at our warehouse in Schiedam (NL). Where necessary, products are adjusted and finished to meet our requirements. Products from our own product line are also hot-dip galvanized to a very high degree. Depending on product type, 80 to 160 m.



Competitive **PRICING**

At Eurostrut we supply and produce the best quality cable support systems and solutions at the most competitive prices. With our own brand you get high quality at low cost. We also supply other brands at sharp prices. Request a quotation today!



Your total supplier with **A LARGE STOCK**

We are a total supplier of cable support systems and solutions. We offer a very complete range, from complete installations to loose mounting materials. With a large stock in our warehouse in Schiedam (NL), we can meet every need.

+ 31 10 522 33 51 info@eurostrut.com **eurostrut.com**

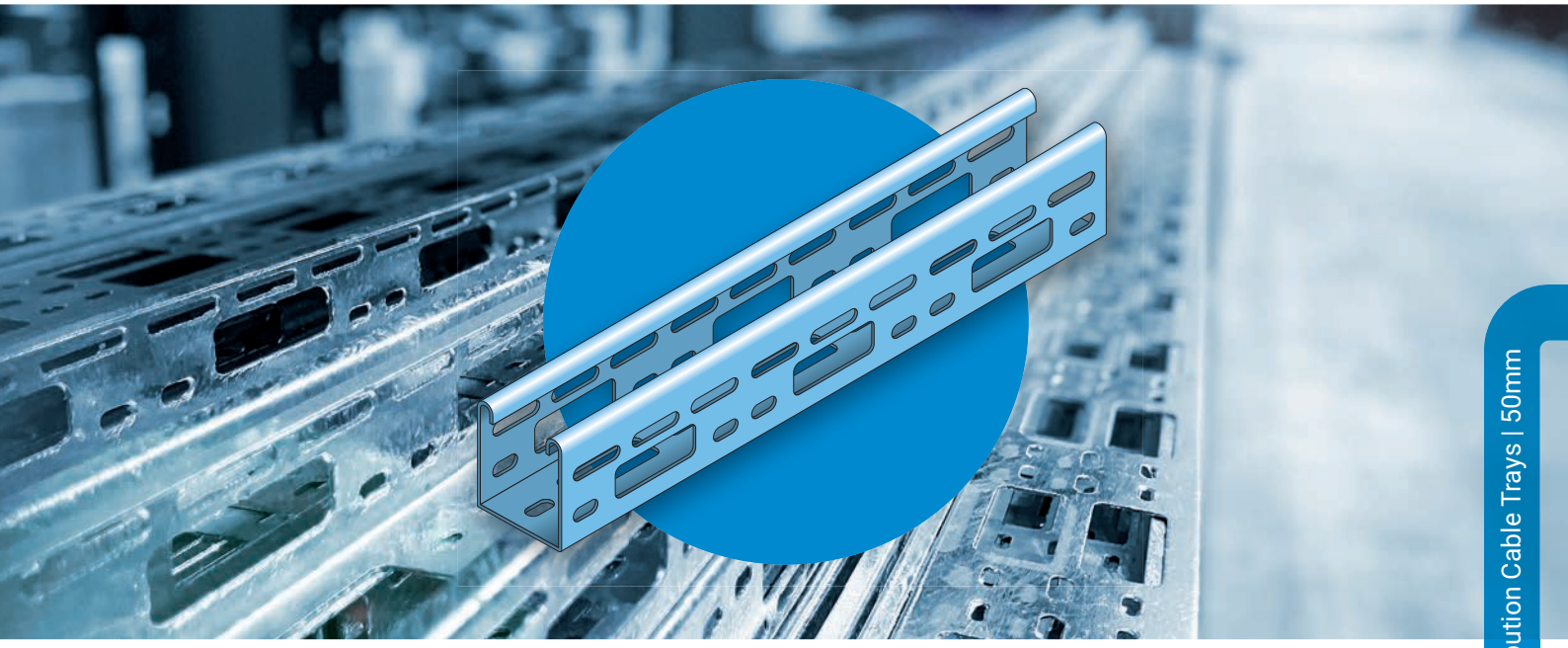

Cable Management Systems
Distribution Cable Trays | 50mm
Heavy duty distribution cable tray system for industrial environments

General specifications

- The Eurostrut cable tray is manufactured in accordance with BS EN 61537 / IEC 61537.
- Standard material is carbon steel, standard surface finish is hot dip galvanized (HDG), in accordance with NEN-EN-ISO 1461.
- Thickness layer for trays (and most accessories) is 60 to 70 µm.
- (On request) materials also available in stainless steel 304 or 316L.
- Powder coating according to RAL colors possible.
- Accessories must be supported on all sides.
- The standard heights are 60 and 100 mm.
- The standard angle for accessories is 90°.
- The standard radius for accessories is 90 mm.
- Other angles and radii for accessories are available on request.
- Other widths available on request.

General conditions

- Eurostrut Support Systems & Solutions B.V. is not liable for cable trays and accessories that are incorrectly installed or where different parts or maintenance methods are applied.
- Although the product information shown in this catalog is accurate and reliable, Eurostrut Support Systems & Solutions B.V. can not be held responsible and liable for inaccuracies.
- The performance data are specific and may be subject to variations due to normal manufacturing tolerances.
- Eurostrut Support Systems & Solutions B.V. reserves the right to change performance information or specifications at any time without notice.

2ba

The convenience of 2ba

Eurostrut's products are listed with all associated information in 2BA's central article database. Product, price and stock information must be continuously available in order to operate efficiently. The 2BA data pool offers the solution.

2ba.nl

The main advantages of 2BA:

- Design, calculate and order more efficiently because all product and price information comes from the same source.
- Data is directly available via the leading ERP software packages or your own custom system.
- You have your own net purchase prices based on Eurostrut's agreed purchasing conditions.

Eurostrut is **ISO 9001 certified**, ensuring quality management across all processes to meet customer requirements and specifications.

By achieving **step 3** certification on the **CO_2 Performance Ladder**, Eurostrut demonstrates its commitment to environmental responsibility and fostering a healthy living environment.

EDCT50 | Eurostrut | Distribution Cable Tray

SPECIFICATIONS

- Standard surface finish of the distribution cable tray and accessories is hot dip galvanized (HDG) in accordance with NEN-EN-ISO 1461.
- On request materials also available in pre galvanized (PG) or stainless steel 304.
- Accessories must be supported at all sides.
- Standard angle for accessories is 90°.
- Standard length 3 meter.



LOAD DATA

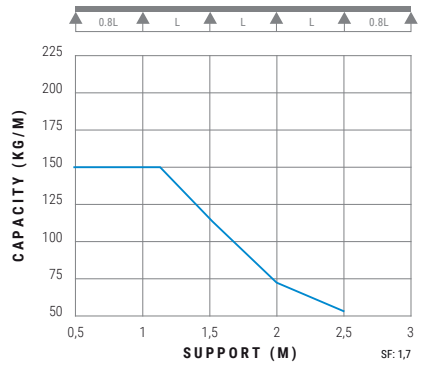

	Article number	W mm	H mm	t mm	kg/ unit
●	EDCT50-50-HDG	50	50	1,5	4,20
●	EDCT50-100-HDG	100	50	1,5	5,30
●	EDCT50-150-HDG	150	50	1,5	6,40
●	EDCT50-200-HDG	200	50	1,5	7,50
●	EDCT50-50-PG	50	50	1,5	4,05
●	EDCT50-100-PG	100	50	1,5	5,10
●	EDCT50-150-PG	150	50	1,5	6,15
●	EDCT50-200-PG	200	50	1,5	7,20
●	EDCT50-50-304	50	50	1,5	4,05
●	EDCT50-100-304	100	50	1,5	5,10
●	EDCT50-150-304	150	50	1,5	6,15
●	EDCT50-200-304	200	50	1,5	7,20

● In stock ● Limited stock ● On request

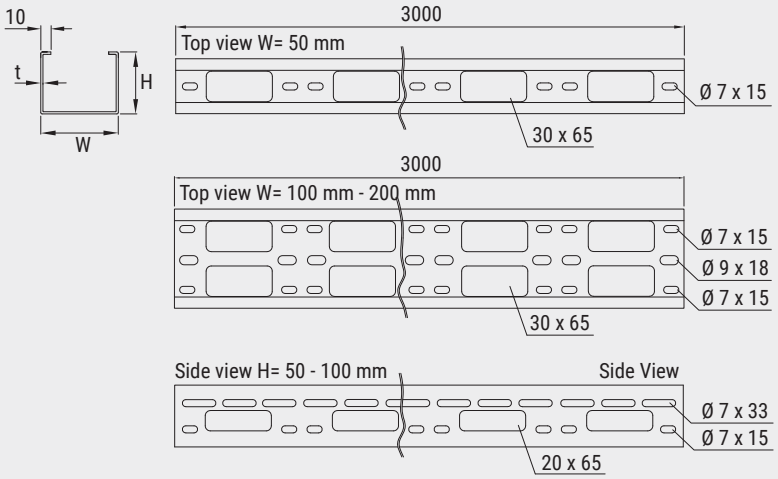

EDCTMC50 | Eurostrut | Multifunctional Coupler Plate

SPECIFICATIONS

- Standard surface finish of the distribution cable tray and accessories is hot dip galvanized (HDG) in accordance with NEN-EN-ISO 1461.
- On request materials also available in pre galvanized (PG) or stainless steel 304.
- Jointing piece can be used both internally and externally with the distribution cable tray.

INCLUDING

- 4x set M6x15

	Article number	W mm	H mm	t mm	kg/ unit
●	EDCTMC50-50-HDG	135	45	1,5	0,06
●	EDCTMC50-100-HDG	135	45	1,5	0,06
●	EDCTMC50-150-HDG	135	45	1,5	0,06
●	EDCTMC50-50-PG	135	45	1,5	0,06
●	EDCTMC50-100-PG	135	45	1,5	0,06
●	EDCTMC50-150-PG	135	45	1,5	0,06
●	EDCTMC50-50-304	135	45	1,5	0,06
●	EDCTMC50-100-304	135	45	1,5	0,06
●	EDCTMC50-150-304	135	45	1,5	0,06

● In stock ● Limited stock ● On request

Combine two jointing pieces to create a vertical hinged jointing piece

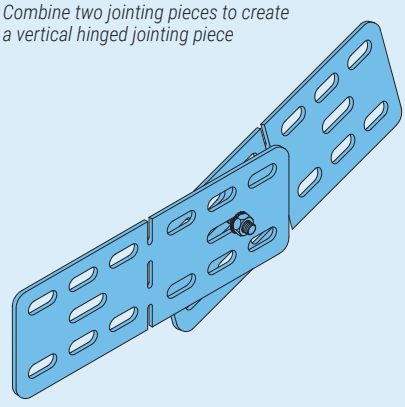

Bending jointing piece to create a horizontal hinged jointing piece

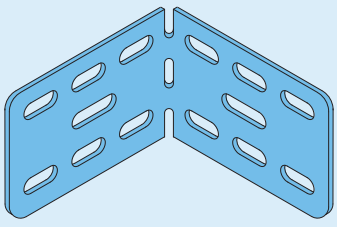

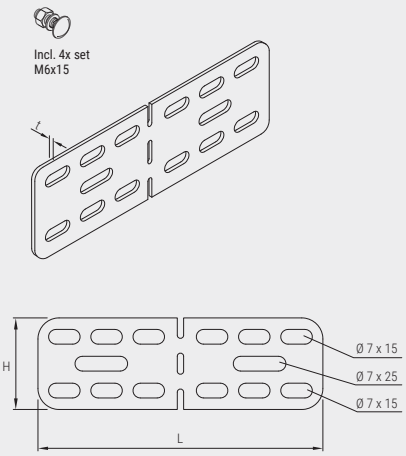

| + 31 10 522 33 51 | info@eurostrut.com | eurostrut.com

EDCTSC | Eurostrut | Straight Cover for EDCT Cable Tray

SPECIFICATIONS

- Standard surface finish of the distribution cable tray and accessories is hot dip galvanized (HDG) in accordance with NEN-EN-ISO 1461.
- On request materials also available in pre galvanized (PG) or stainless steel 304.

INCLUDING

- Turn buckles

	Article number	W mm	H mm	t mm	kg/ unit
●	EDCTSC50-HDG	55	8	1,5	2,51
●	EDCTSC100-HDG	105	8	1,5	4,27
●	EDCTSC150-HDG	155	8	1,5	6,04
●	EDCTSC200-HDG	205	8	1,5	7,81
●	EDCTSC50-PG	55	8	1,5	2,51
●	EDCTSC100-PG	105	8	1,5	4,27
●	EDCTSC150-PG	155	8	1,5	6,04
●	EDCTSC200-PG	205	8	1,5	7,81
●	EDCTSC50-304	55	8	1,5	2,51
●	EDCTSC100-304	105	8	1,5	4,27
●	EDCTSC150-304	155	8	1,5	6,04
●	EDCTSC200-304	205	8	1,5	7,81

● In stock ● Limited stock ● On request

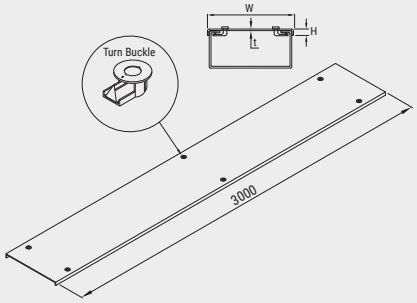

EDCTB50 | Eurostrut | 90° Horizontal Flat Bend

SPECIFICATIONS

- Standard surface finish of the distribution cable tray and accessories is hot dip galvanized (HDG) in accordance with NEN-EN-ISO 1461.
- On request materials also available in pre galvanized (PG) or stainless steel 304.
- Accessories must be supported at all sides.
- Standard angle for accessories is 90°.

INCLUDING

- 4x set M6x15

	Article number	W mm	H mm	t mm	kg/ unit
●	EDCTB50-50-HDG	55	55	1,5	0,35
●	EDCTB50-100-HDG	105	55	1,5	0,70
●	EDCTB50-150-HDG	155	55	1,5	1,05
●	EDCTB50-200-HDG	205	55	1,5	1,40
●	EDCTB50-50-PG	55	55	1,5	0,35
●	EDCTB50-100-PG	105	55	1,5	0,70
●	EDCTB50-150-PG	155	55	1,5	1,05
●	EDCTB50-200-PG	205	55	1,5	1,40
●	EDCTB50-50-304	55	55	1,5	0,35
●	EDCTB50-100-304	105	55	1,5	0,70
●	EDCTB50-150-304	155	55	1,5	1,05
●	EDCTB50-200-304	205	55	1,5	1,40

● In stock ● Limited stock ● On request

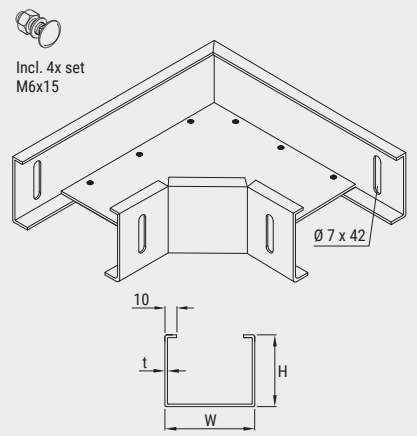

EDCTBC | Eurostrut | Cover for EDCTB 90° Flat Bend

SPECIFICATIONS

- Standard surface finish of the distribution cable tray and accessories is hot dip galvanized (HDG) in accordance with NEN-EN-ISO 1461.
- On request materials also available in pre galvanized (PG) or stainless steel 304.
- Standard angle for accessories is 90°.

INCLUDING

- Turn buckles

	Article number	W mm	H mm	t mm	kg/ unit
●	EDCTBC50-HDG	55	8	1,5	0,15
●	EDCTBC100-HDG	105	8	1,5	0,30
●	EDCTBC150-HDG	155	8	1,5	0,45
●	EDCTBC200-HDG	205	8	1,5	0,60
●	EDCTBC50-PG	55	8	1,5	0,15
●	EDCTBC100-PG	105	8	1,5	0,30
●	EDCTBC150-PG	155	8	1,5	0,45
●	EDCTBC200-PG	205	8	1,5	0,60
●	EDCTBC50-304	55	8	1,5	0,15
●	EDCTBC100-304	105	8	1,5	0,30
●	EDCTBC150-304	155	8	1,5	0,45
●	EDCTBC200-304	205	8	1,5	0,60

● In stock ● Limited stock ● On request

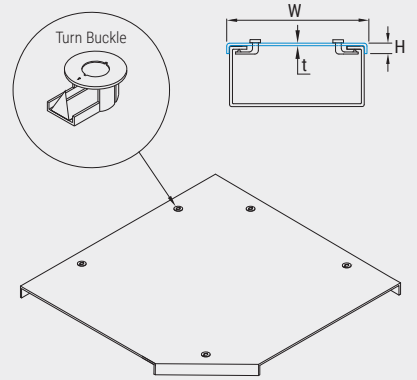

EDCTT50 | Eurostrut | Equal Tee Piece

SPECIFICATIONS

- Standard surface finish of the distribution cable tray and accessories is hot dip galvanized (HDG) in accordance with NEN-EN-ISO 1461.
- On request materials also available in pre galvanized (PG) or stainless steel 304.
- Accessories must be supported at all sides.
- Standard angle for accessories is 90°.

INCLUDING

- 6x set M6x15

	Article number	W mm	H mm	t mm	kg/ unit
●	EDCTT50-50-HDG	55	55	1,5	0,45
●	EDCTT50-100-HDG	105	55	1,5	0,90
●	EDCTT50-150-HDG	155	55	1,5	1,35
●	EDCTT50-200-HDG	205	55	1,5	1,80
●	EDCTT50-50-PG	55	55	1,5	0,45
●	EDCTT50-100-PG	105	55	1,5	0,90
●	EDCTT50-150-PG	155	55	1,5	1,35
●	EDCTT50-200-PG	205	55	1,5	1,80
●	EDCTT50-50-304	55	55	1,5	0,45
●	EDCTT50-100-304	105	55	1,5	0,90
●	EDCTT50-150-304	155	55	1,5	1,35
●	EDCTT50-200-304	205	55	1,5	1,80

● In stock ● Limited stock ● On request

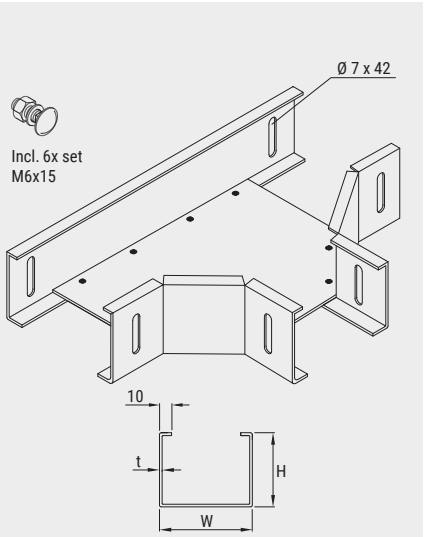

EDCTTC | Eurostrut | Cover for EDCTT Equal Tee Piece

SPECIFICATIONS

- Standard surface finish of the distribution cable tray and accessories is hot dip galvanized (HDG) in accordance with NEN-EN-ISO 1461.
- On request materials also available in pre galvanized (PG) or stainless steel 304.
- Standard angle for accessories is 90°.

INCLUDING

- Turn buckles

	Article number	W mm	H mm	t mm	kg/ unit
●	EDCTTC50-HDG	55	8	1,5	0,20
●	EDCTTC100-HDG	105	8	1,5	0,40
●	EDCTTC150-HDG	155	8	1,5	0,60
●	EDCTTC200-HDG	205	8	1,5	0,80
●	EDCTTC50-PG	55	8	1,5	0,20
●	EDCTTC100-PG	105	8	1,5	0,40
●	EDCTTC150-PG	155	8	1,5	0,60
●	EDCTTC200-PG	205	8	1,5	0,80
●	EDCTTC50-304	55	8	1,5	0,20
●	EDCTTC100-304	105	8	1,5	0,40
●	EDCTTC150-304	155	8	1,5	0,60
●	EDCTTC200-304	205	8	1,5	0,80

● In stock ● Limited stock ● On request

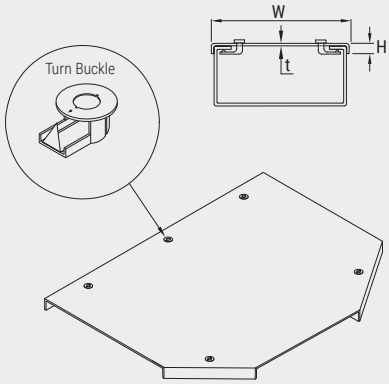

EDCTIC50 | Eurostrut | Internal Coupler

SPECIFICATIONS

- Standard surface finish of the distribution cable tray and accessories is hot dip galvanized (HDG) in accordance with NEN-EN-ISO 1461.
- On request materials also available in pre galvanized (PG) or stainless steel 304.
- Coupler piece to be used only for internal application with the distribution cable tray.

INCLUDING

- 4x set M6x15

	Article number	W mm	H mm	t mm	kg/ unit
●	EDCTIC50-50-HDG	45	45	1,5	0,19
●	EDCTIC50-100-HDG	95	45	1,5	0,26
●	EDCTIC50-150-HDG	145	45	1,5	0,33
●	EDCTIC50-200-HDG	195	45	1,5	0,40
●	EDCTIC50-50-PG	45	45	1,5	0,19
●	EDCTIC50-100-PG	95	45	1,5	0,26
●	EDCTIC50-150-PG	145	45	1,5	0,33
●	EDCTIC50-200-PG	195	45	1,5	0,40
●	EDCTIC50-50-304	45	45	1,5	0,19
●	EDCTIC50-100-304	95	45	1,5	0,26
●	EDCTIC50-150-304	145	45	1,5	0,33
●	EDCTIC50-200-304	195	45	1,5	0,40

● In stock ● Limited stock ● On request

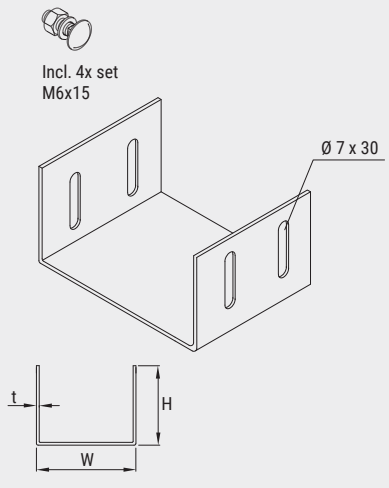

| + 31 10 522 33 51 | info@eurostrut.com | eurostrut.com

ECPR | Eurostrut | Cable Protection Ring for EDCT Cable Tray

SPECIFICATIONS

- The cable protection ring is to be arranged in personal danger areas!
- To protect the cables from damage for the sharp edges of the cable entry holes.
- Material: Polyethylene (PE).

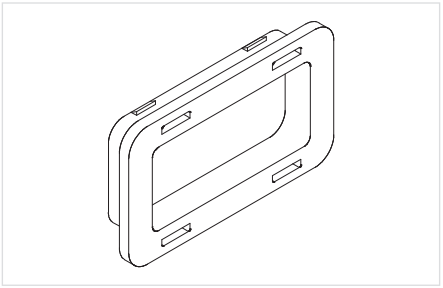

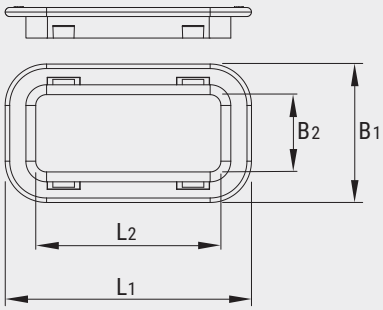

	Article number	Position	L1 mm	B1 mm	L2 mm	B2 mm	kg/ unit
●	ECPR-S-PB	Sidewall	65	20	58	14,5	0,0035
●	ECPR-B-PB	Bottom	65	30	58	24	0,0040

● In stock ● Limited stock ● On request

EFS6x15 | Eurostrut | Cable Tray Fixing Set M6x15mm

SPECIFICATIONS

- Cable Tray Fixing Set M6x15 (Bolt + Nut + Washer)
- Surface finish Geomet or Stainless steel 304.

	Article number	W mm	H mm	kg/ unit
●	EFS6x15-GEO	M6	15	0,010
●	EFS6x15-304	M6	15	0,010

● In stock ● Limited stock ● On request

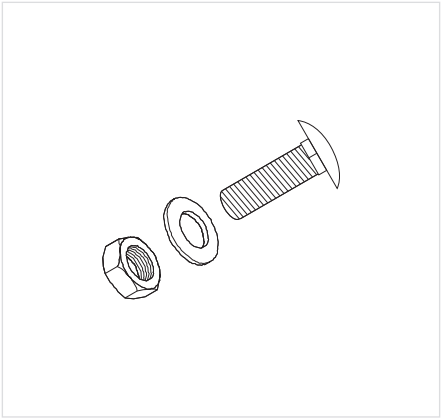

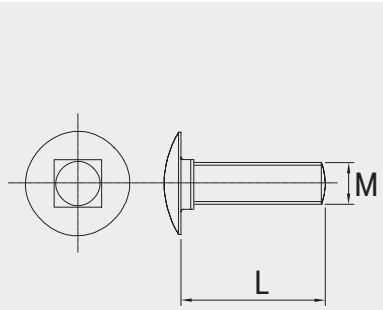

EDCTSB50 | Eurostrut | Suspension Bracket for Cable Tray W=50mm

SPECIFICATIONS

- Suspension bracket for fixing of EDCT Distribution Cable Tray with chain or wire rope.
- Standard surface finish of the distribution cable tray and accessories is hot dip galvanized (HDG) in accordance with NEN-EN-ISO 1461.
- On request materials also available in pre galvanized (PG) or stainless steel 304.

	Article number	W mm	H mm	t mm	kg/ unit
●	EDCTSB50-PG	63	82,5	4	0,02
●	EDCTSB50-HDG	63	82,5	4	0,02
●	EDCTSB50-304	63	82,5	4	0,02

● In stock ● Limited stock ● On request

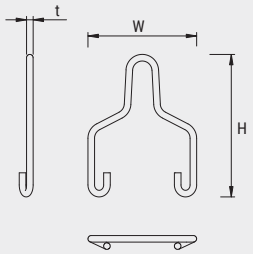

EDCTSB100 | Eurostrut | Suspension Bracket for Cable Tray W=100mm

SPECIFICATIONS

- Suspension bracket for fixing of EDCT Distribution Cable Tray with chain or wire rope.
- Standard surface finish of the distribution cable tray and accessories is hot dip galvanized (HDG) in accordance with NEN-EN-ISO 1461.
- On request materials also available in pre galvanized (PG) or stainless steel 304.

	Article number	W mm	H mm	t mm	kg/ unit
●	EDCTSB100-PG	115	84	5	0,04
●	EDCTSB100-HDG	115	84	5	0,04
●	EDCTSB100-304	115	84	5	0,04

● In stock ● Limited stock ● On request

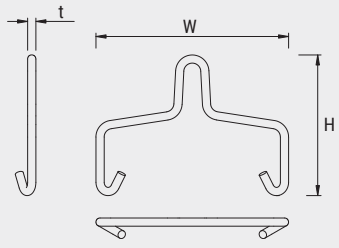

Your **total** supplier

As a total supplier of cable support and strut mounting systems, we always have cable ladders, marine ladders, cable trays, cable protection tubes, wire trays and mounting materials in stock. We can also deliver Ellis and the nVent range quickly – and in many cases directly from stock.

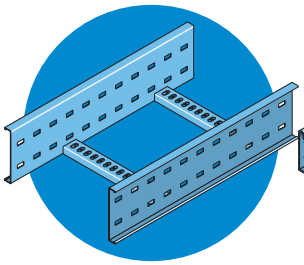

Cable ladders

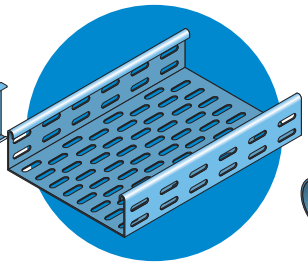

Cable trays

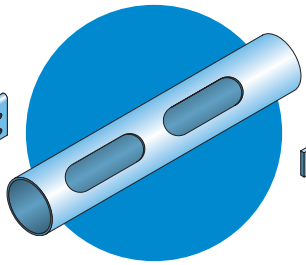

Cable tubes

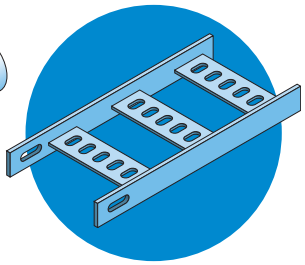

Marine ladders

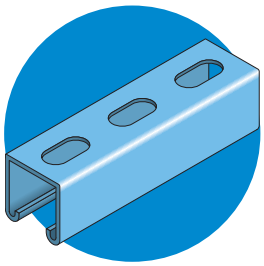

Strut

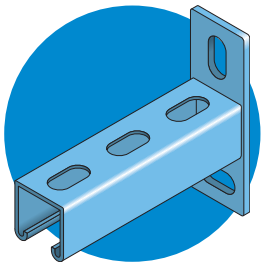

Mounting

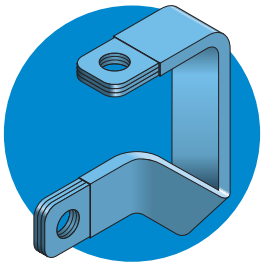

Conductors

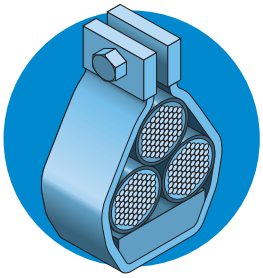

Cable clamps



For our complete range, visit **eurostrut.com**

Quality solutions for your projects

Eurostrut supplies highly loadable cable support systems in various markets such as industry, chemistry, energy, infrastructure, non-residential construction, maritime and offshore. Every market, every segment, every customer has wishes and challenges when it comes to the transit of energy and data. From large spans and cable weights to large temperature differences and moisture. Eurostrut has a suitable solution for every need and situation.

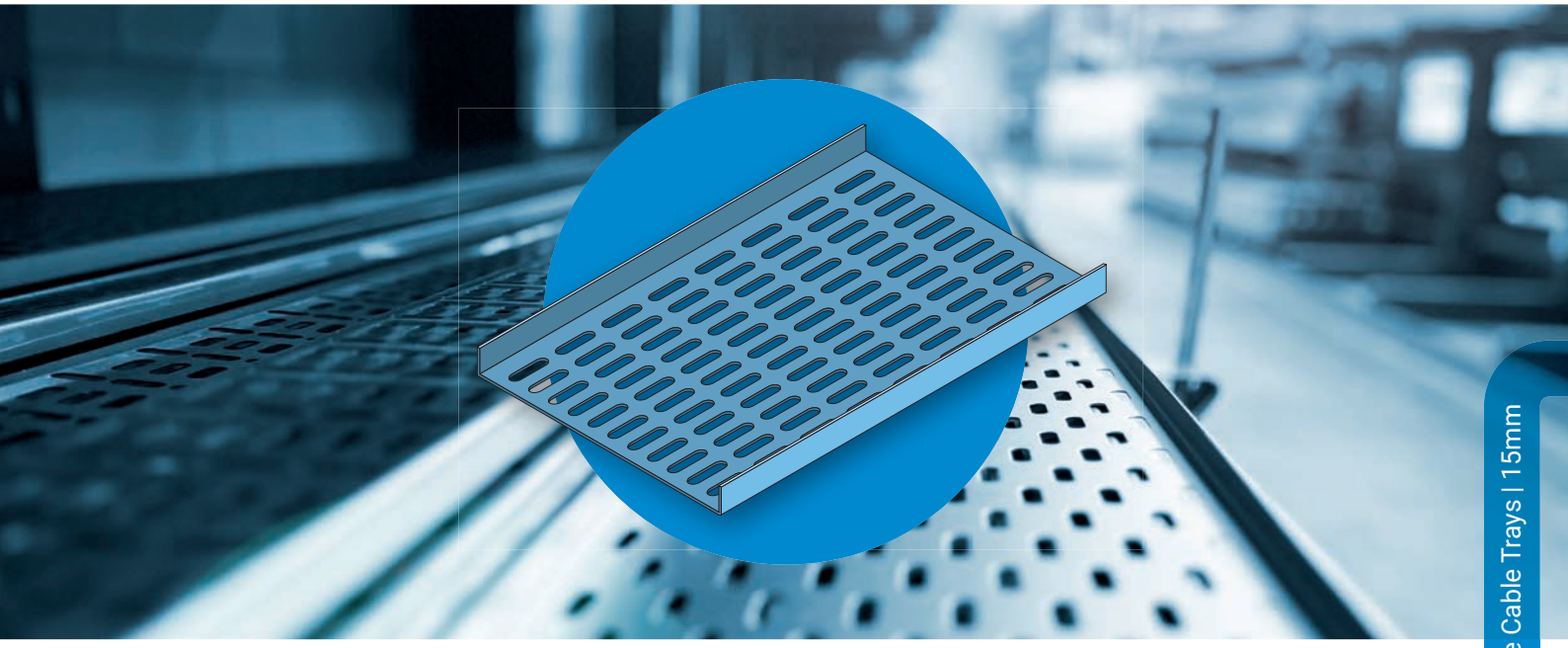

Cable Management Systems
Marine Cable Trays | 15mm
Perforated marine cable tray

EMCT | Eurostrut | Marine Cable Tray

SPECIFICATIONS

- Marine perforated cable tray.
- Carbon steel, standard surface finish is hot dip galvanized (HDG), in accordance with NEN-EN-ISO 1461.
- Thickness layer 60 to 70 µm.
- On request: pre galvanized, stainless steel 304 or 316L.
- Powder coating according to RAL colors possible.

	Article number	B mm	H mm	L mm	kg/ unit
●	EMCT-50-HDG	50	15	1	1,65
●	EMCT-100-HDG	100	15	1	2,70
●	EMCT-150-HDG	150	15	1	3,75
●	EMCT-200-HDG	200	15	1	4,50
●	EMCT-300-HDG	300	15	1,5	9,75

● In stock ● Limited stock ● On request

Available surface finishes	Change HDG to	Stock
Hot dip galvanized	-	●
Stainless steel A4 / 316L	SS316	●
Stainless steel A2 / 304	SS304	●

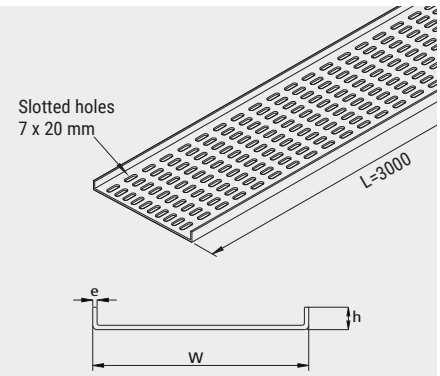

2ba

The convenience of 2ba

Eurostrut's products are listed with all associated information in 2BA's central article database. Product, price and stock information must be continuously available in order to operate efficiently. The 2BA data pool offers the solution.

2ba.nl

The main advantages of 2BA:

- Design, calculate and order more efficiently because all product and price information comes from the same source.
- Data is directly available via the leading ERP software packages or your own custom system.
- You have your own net purchase prices based on Eurostrut's agreed purchasing conditions.

Eurostrut is **ISO 9001 certified**, ensuring quality management across all processes to meet customer requirements and specifications.

By achieving **step 3** certification on the **CO_2 Performance Ladder**, Eurostrut demonstrates its commitment to environmental responsibility and fostering a healthy living environment.

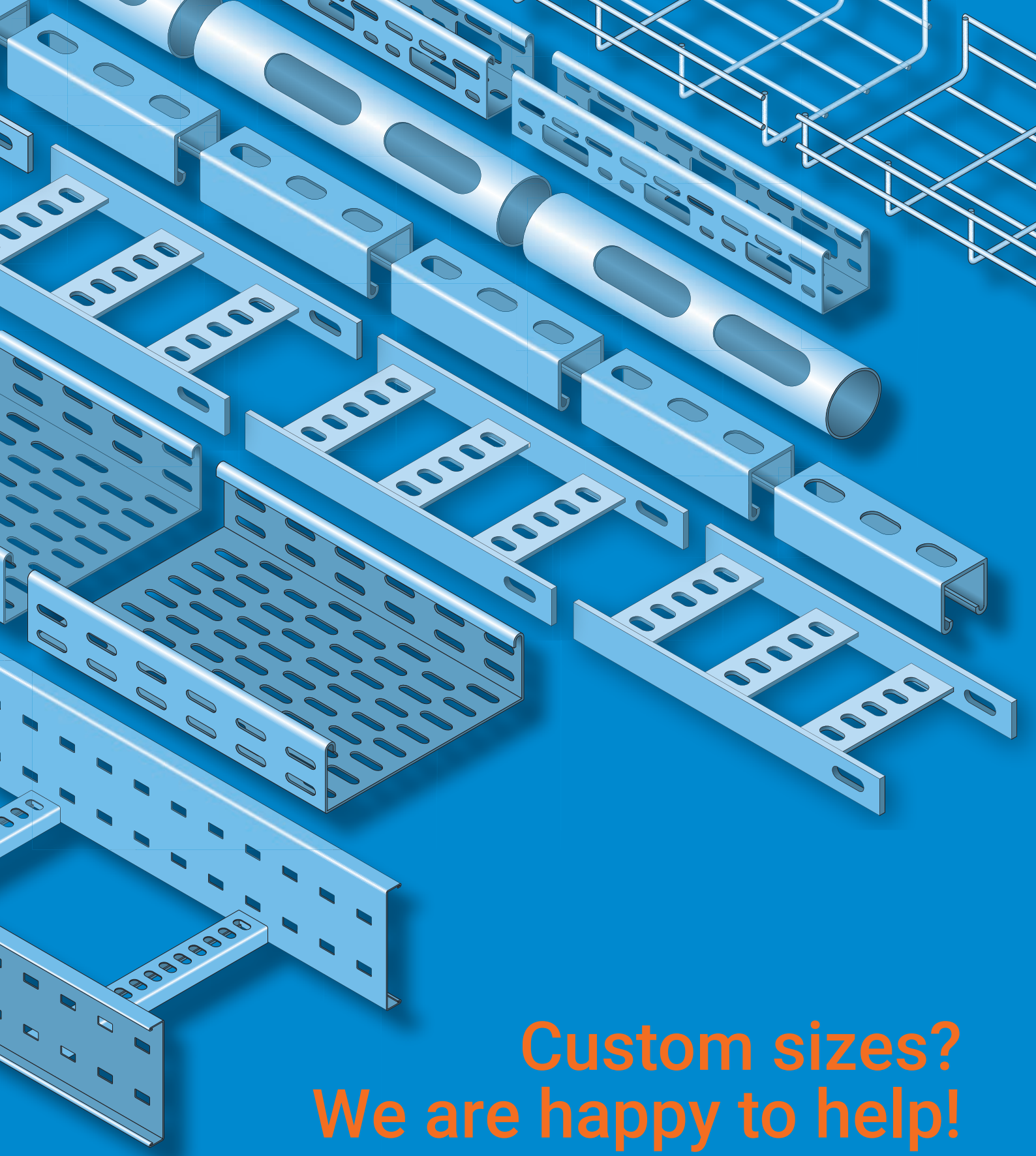

Custom sizes? We are happy to help!

In need of a different angle, radius, length or finish? Many of are products can be produced to you specific needs.

Contact our sales team:
+ 31 10 522 33 51 or **info@eurostrut.com**

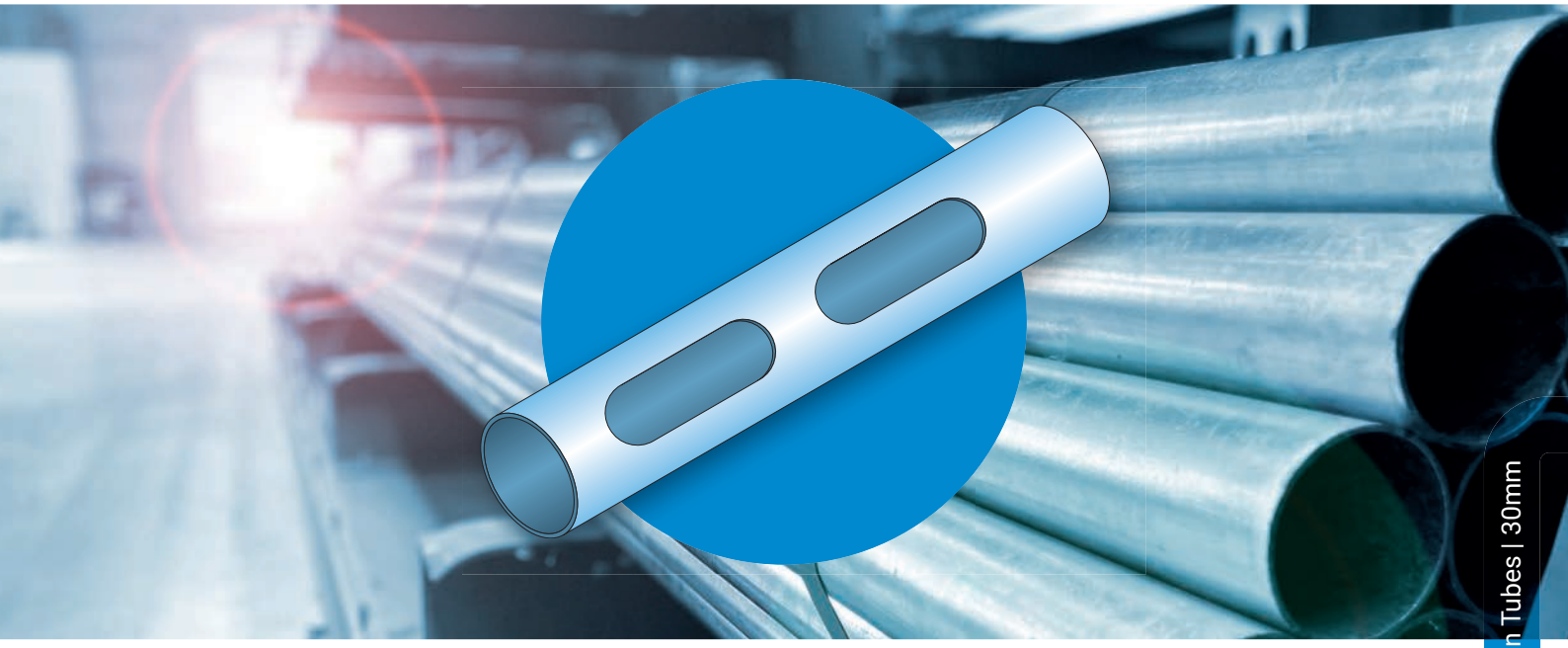

Cable Tube System
Cable Protection Tubes | 30mm

For environments where more protection
(of corrosion or chemicals) of cables is desired.

General specifications

- The Eurostrut cable protection tube system is manufactured in accordance with BS EN 61537 / IEC 61537.
- Standard material for cable protection system is carbon steel S235JRG, standard surface finish is hot dip galvanized (FT), in accordance with NEN-EN-ISO 1461.
- Thickness layer 45 µm.
- Materials are also available in stainless steel 316L.
- On request materials are available in stainless steel 304.
- The standard diameters are 30 and 60 mm.
- 48 mm diameter available on request.

General conditions

- Eurostrut Support Systems & Solutions B.V. is not liable for cable tubes and accessories that are incorrectly installed or where different parts or maintenance methods are applied.
- Although the product information shown in this catalog is accurate and reliable, Eurostrut Support Systems & Solutions B.V. can not be held responsible and liable for inaccuracies.
- The performance data are specific and may be subject to variations due to normal manufacturing tolerances.
- Eurostrut Support Systems & Solutions B.V. reserves the right to change performance information or specifications at any time without notice.

2ba

The convenience of 2ba

Eurostrut's products are listed with all associated information in 2BA's central article database. Product, price and stock information must be continuously available in order to operate efficiently. The 2BA data pool offers the solution.

2ba.nl

The main advantages of 2BA:

- Design, calculate and order more efficiently because all product and price information comes from the same source.
- Data is directly available via the leading ERP software packages or your own custom system.
- You have your own net purchase prices based on Eurostrut's agreed purchasing conditions.

Eurostrut is **ISO 9001 certified**, ensuring quality management across all processes to meet customer requirements and specifications.

By achieving **step 3** certification on the **CO_2 Performance Ladder**, Eurostrut demonstrates its commitment to environmental responsibility and fostering a healthy living environment.

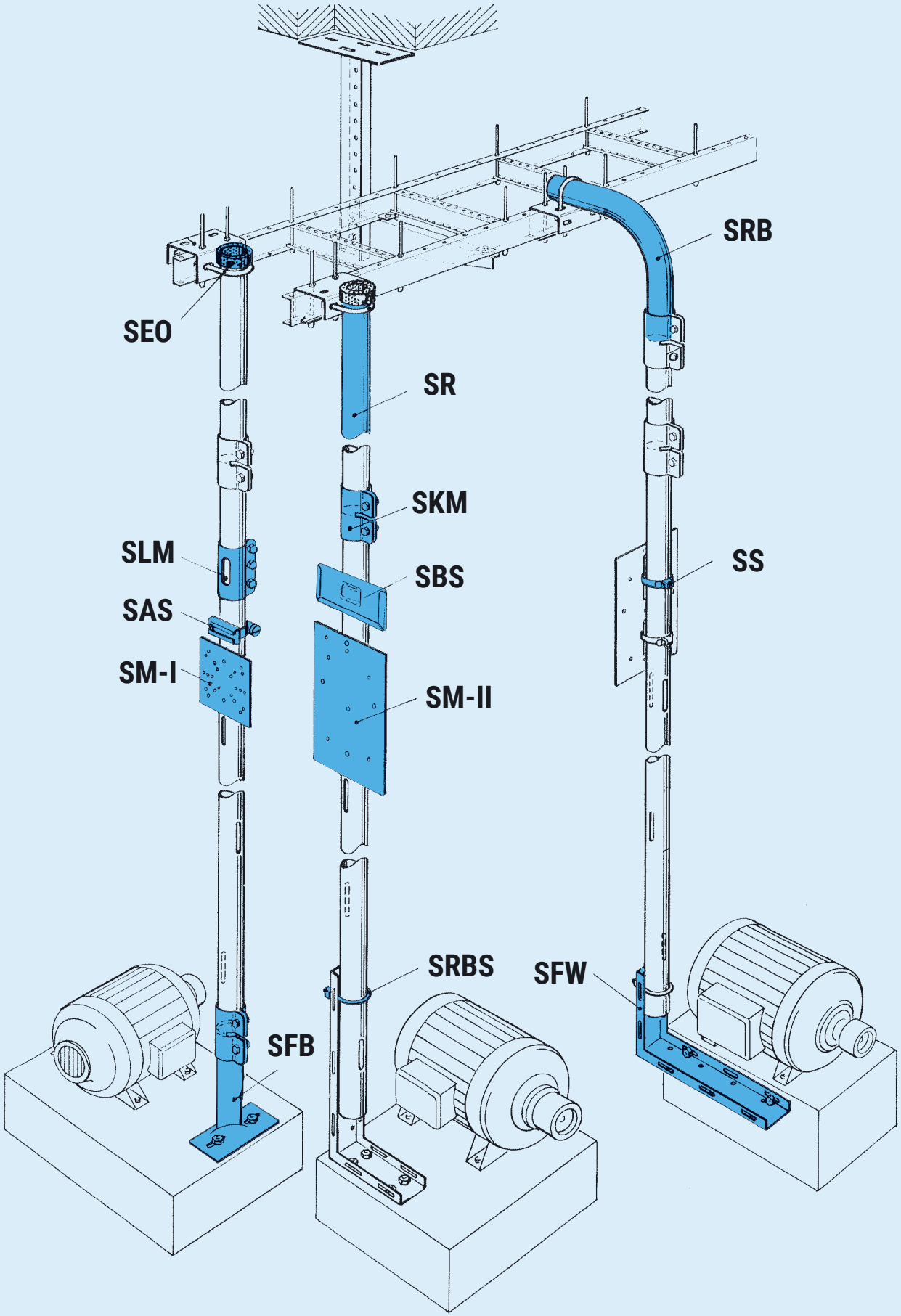
SRB
SEO
SR
SKM
SLM
SBS
SS
SAS
SM-I
SM-II
SRBS
SFW
SFB

SR-30 | Eurostrut | Cable Protection Tube 30mm

SPECIFICATIONS

- Cold rolled (not bendable).
- Carbon steel S235JRG, standard surface finish is hot dip galvanized (FT), in accordance with NEN-EN-ISO 1461.
- Thickness layer 45 µm.
- Also available in stainless steel 304 (ER2) or 316L (ER4).

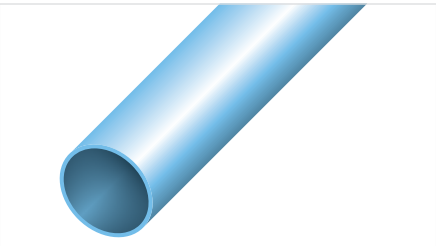

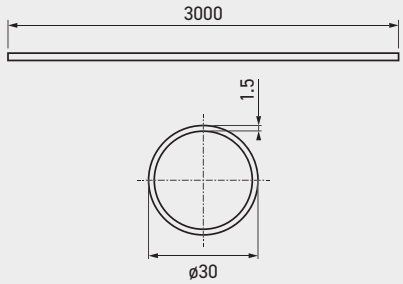

	Article number	L mm	D mm	E mm	kg/ meter
●	SR-30-FT	6000	30	1.5	7.2
●	SR-30-ER2	6000	30	1.5	7.2
●	SR-30-ER4	6000	30	1.5	7.2

● In stock ● Limited stock ● On request

SRL-30-FT | Eurostrut | Cable Protection Tube Slotted 30mm

SPECIFICATIONS

- With lasered holes 55x20mm.
- Cold rolled (not bendable).
- Carbon steel S235JRG, standard surface finish is hot dip galvanized (FT), in accordance with NEN-EN-ISO 1461.
- Thickness layer 45 µm.
- Also available in stainless steel 304 (ER2) or 316L (ER4).

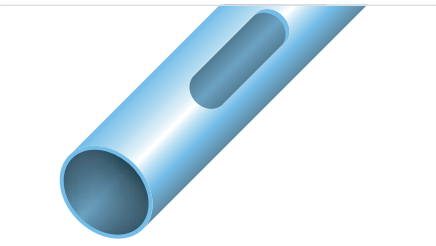

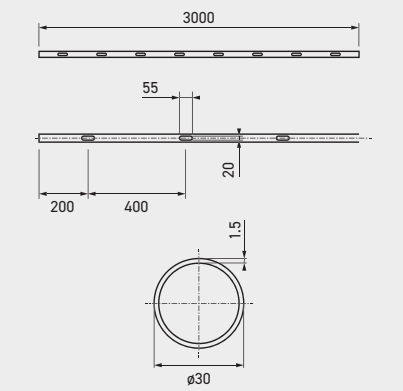

	Article number	L mm	D mm	E mm	kg/ unit
●	SRL-30-FT	6000	30	1.5	7.0
●	SRL-30-ER2	6000	30	1.5	7.0
●	SRL-30-ER4	6000	30	1.5	7.0

● In stock ● Limited stock ● On request

SRB-45-30 | Eurostrut | Bend 45° Closed 30mm

SPECIFICATIONS

- For SR-30 and SRL-30 cable protection tubes.
- SKM-30 coupling socket required.
- Carbon steel S235JRG, standard surface finish is hot dip galvanized (FT), in accordance with NEN-EN-ISO 1461.
- Thickness layer 45 µm.
- Also available in stainless steel 304 (ER2) or 316L (ER4).

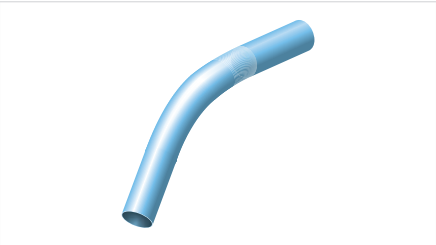

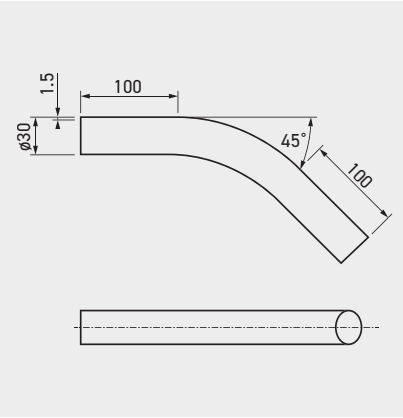

	Article number	∠	D mm	E mm	kg/ unit
●	SRB-45-30-FT	45°	30	1.5	0.28
●	SRB-45-30-ER2	45°	30	1.5	0.28
●	SRB-45-30-ER4	45°	30	1.5	0.28

● In stock ● Limited stock ● On request

SRB-90-30 | Eurostrut | Bend 90° Closed 30mm

SPECIFICATIONS

- For SR-30 and SRL-30 cable protection tubes.
- SKM-30 coupling socket required.
- Carbon steel S235JRG, standard surface finish is hot dip galvanized (FT), in accordance with NEN-EN-ISO 1461.
- Thickness layer 45 µm.
- Also available in stainless steel 304 (ER2) or 316L (ER4).



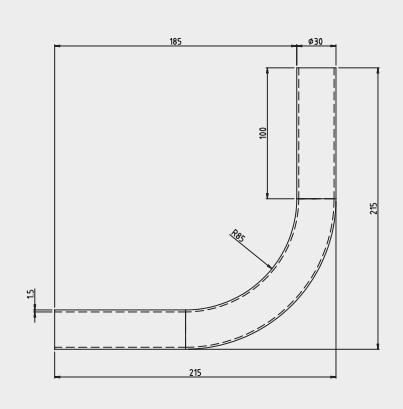

	Article number	∠	D mm	E mm	kg/ unit
●	SRB-90-30-FT	90°	30	1.5	0.36
●	SRB-90-30-ER2	90°	30	1.5	0.40
●	SRB-90-30-ER4	90°	30	1.5	0.40

● In stock ● Limited stock ● On request

SRBO-45-30 | Eurostrut | Bend 45° Open 30mm

SPECIFICATIONS

- For SR-30 and SRL-30 cable protection tubes.
- SKM-30 Coupling Socket required
- Carbon steel S235JRG, standard surface finish is hot dip galvanized (FT), in accordance with NEN-EN-ISO 1461.
- Thickness layer 45 µm.
- Also available in stainless steel 304 (ER2) or 316L (ER4).

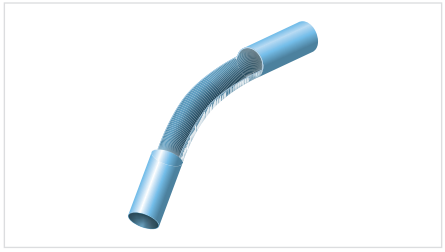

	Article number	R mm	D mm	E mm	kg/ unit
●	SRBO-45-30-FT	100	30	1.5	0.39
●	SRBO-45-30-ER2	100	30	1.5	0.39
●	SRBO-45-30-ER4	100	30	1.5	0.39

● In stock ● Limited stock ● On request

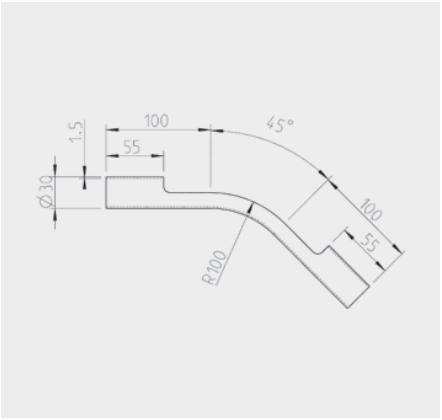

SRBO-90-30 | Eurostrut | Bend 90° Open 30mm

SPECIFICATIONS

- For SR-30 and SRL-30 cable protection tubes.
- SKM-30 Coupling Socket required
- Carbon steel S235JRG, standard surface finish is hot dip galvanized (FT), in accordance with NEN-EN-ISO 1461.
- Thickness layer 45 µm.
- Also available in stainless steel 304 (ER2) or 316L (ER4).



	Article number	R mm	D mm	E mm	kg/ unit
●	SRBO-90-30-FT	100	30	1.5	0.44
●	SRBO-90-30-ER2	100	30	1.5	0.45
●	SRBO-90-30-ER4	100	30	1.5	0.45

● In stock ● Limited stock ● On request

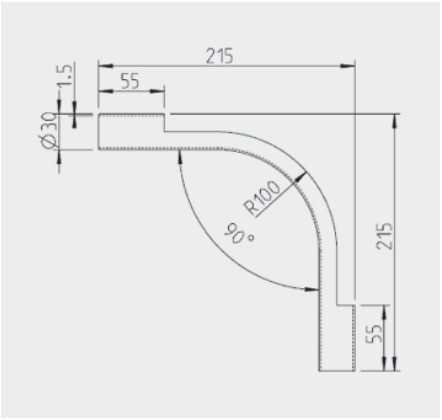

STO-30 | Eurostrut | T-piece Open 30mm

SPECIFICATIONS

- For SR-30 and SRL-30 cable protection tubes.
- Carbon steel S235JRG, standard surface finish is hot dip galvanized (FT), in accordance with NEN-EN-ISO 1461.
- Thickness layer 45 µm.
- Also available in stainless steel 304 (ER2) or 316L (ER4).

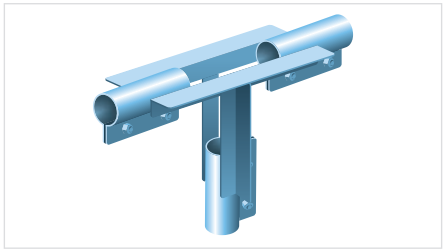

	Article number	D mm	E mm	kg/ unit
●	STO-30-FT	30	1.5	0.70
●	STO-30-ER2	30	1.5	0.66
●	STO-30-ER4	30	1.5	0.66

● In stock ● Limited stock ● On request

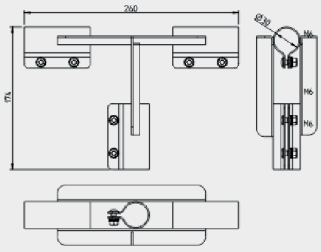

SKM-30 | Eurostrut | Coupling Socket 30mm

SPECIFICATIONS

- For SR-30 and SRL-30 cable protection tubes.
- Lenght 80mm.
- Carbon steel S235JRG, standard surface finish is hot dip galvanized (FT), in accordance with NEN-EN-ISO 1461.
- Thickness layer 45 µm.
- Also available in stainless steel 304 (ER2) or 316L (ER4).

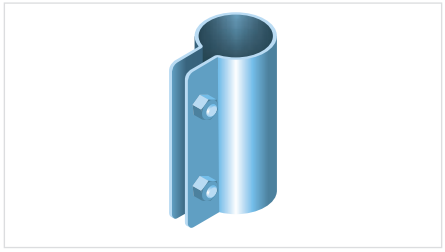

	Article number	D mm	E mm	kg/ unit
●	SKM-30-FT	30	1.5	0.15
●	SKM-30-ER2	30	1.5	0.13
●	SKM-30-ER4	30	1.5	0.13

● In stock ● Limited stock ● On request

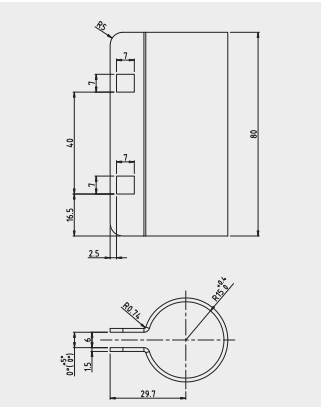

| + 31 10 522 33 51 | info@eurostrut.com | eurostrut.com

SLM-30 | Eurostrut | Coupling Socket with Cable Output 30mm

SPECIFICATIONS

- For SR-30 and SRL-30 cable protection tubes.
- Lenght 130mm.
- Cable output hole 60x29mm.
- Carbon steel S235JRG, standard surface finish is hot dip galvanized (FT), in accordance with NEN-EN-ISO 1461.
- Thickness layer 45 µm.
- Also available in stainless steel 304 (ER2) or 316L (ER4).

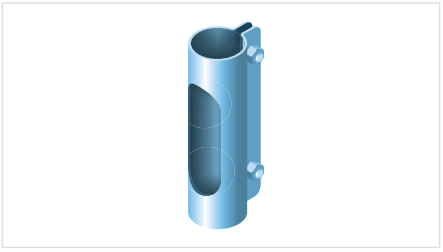

	Article number	D mm	E mm	kg/ unit
●	SLM-30-FT	30	1.5	0.18
●	SLM-30-ER2	30	1.5	0.17
●	SLM-30-ER4	30	1.5	0.17

● In stock ● Limited stock ● On request

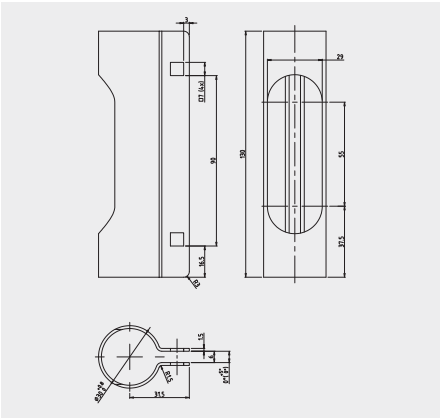

SFB-30 | Eurostrut | Floor Mounting 30mm

SPECIFICATIONS

- For SR-30 and SRL-30 cable protection tubes.
- Carbon steel S235JRG, standard surface finish is hot dip galvanized (FT), in accordance with NEN-EN-ISO 1461.
- Thickness layer 45 µm.
- Also available in stainless steel 304 (ER2) or 316L (ER4).

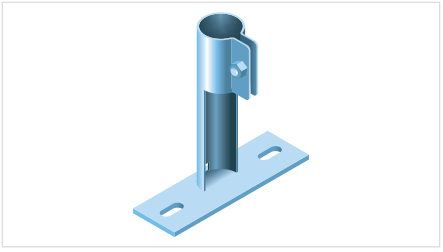

	Article number	D mm	E mm	kg/ unit
●	SFB-30-FT	30	1.5	0.30
●	SFB-30-ER2	30	1.5	0.32
●	SFB-30-ER4	30	1.5	0.32

● In stock ● Limited stock ● On request

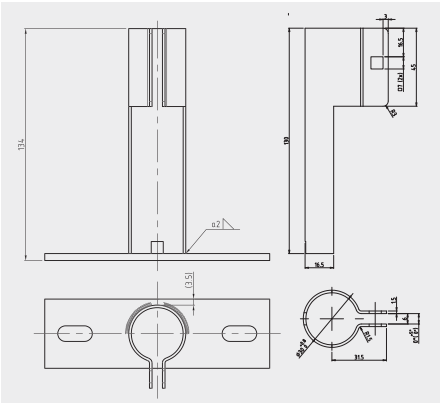

SFW-30 | Eurostrut | Floor Mounting with Angle 30mm

SPECIFICATIONS

- For SR-30 and SRL-30 cable protection tubes.
- Angle 90˚.
- Carbon steel S235JRG, standard surface finish is hot dip galvanized (FT), in accordance with NEN-EN-ISO 1461.
- Thickness layer 45 µm.
- Also available in stainless steel 304 (ER2) or 316L (ER4).

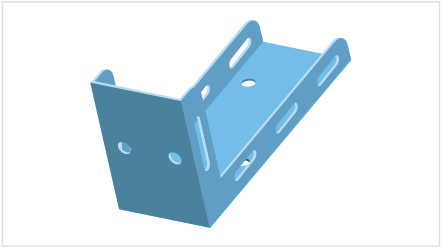

	Article number	D mm	E mm	kg/ unit
●	SFW-30-FT	30	1.5	0.48
●	SFW-30-ER2	30	1.5	0.44
●	SFW-30-ER4	30	1.5	0.44

● In stock ● Limited stock ● On request

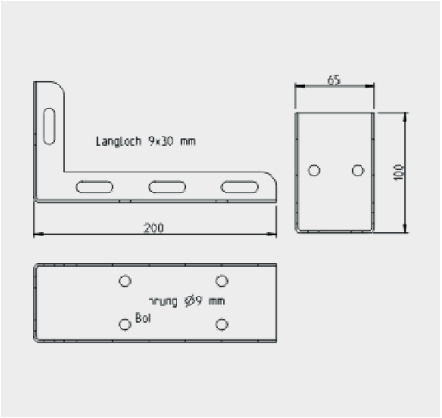

SMI-30 | Eurostrut | Mounting Plate 165x175mm 30mm

SPECIFICATIONS

- Incl. SS-9-30-ER2/ER4 Hose Clamp.
- Carbon steel S235JRG, standard surface finish is hot dip galvanized (FT), in accordance with NEN-EN-ISO 1461.
- Thickness layer 45 µm.
- Also available in stainless steel 304 (ER2) or 316L (ER4).



	Article number	D mm	E mm	kg/ unit
●	SMI-30-FT	30	3	0.60
●	SMI-30-ER2	30	3	0.58
●	SMI-30-ER4	30	3	0.58

● In stock ● Limited stock ● On request

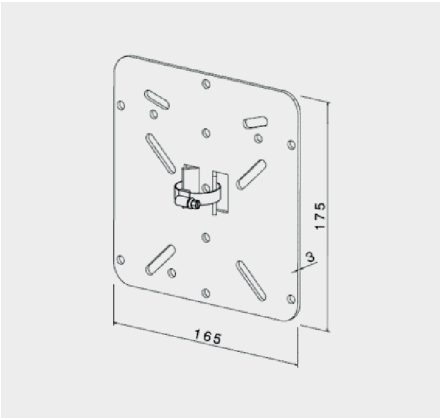

SMII-30 | Eurostrut | Mounting Plate 175x260mm 30mm

SPECIFICATIONS

- Incl. 2x SS-9-30-ER2/ER4 Hose Clamp.
- Carbon steel S235JRG, standard surface finish is hot dip galvanized (FT), in accordance with NEN-EN-ISO 1461.
- Thickness layer 45 µm.
- Also available in stainless steel 304 (ER2) or 316L (ER4).



	Article number	D mm	E mm	kg/ unit
●	SMII-30-FT	30	3	1.00
●	SMII-30-ER2	30	3	1.00
●	SMII-30-ER4	30	3	1.00

● In stock ● Limited stock ● On request

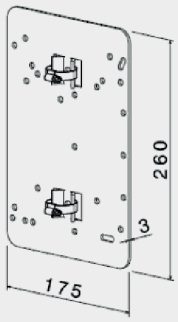

SHKW-30 | Eurostrut | Mounting Bracket 30mm

SPECIFICATIONS

- For SR-30 and SRL-30 cable protection tubes.
- Carbon steel S235JRG, standard surface finish is hot dip galvanized (FT), in accordance with NEN-EN-ISO 1461.
- Thickness layer 45 µm.
- Also available in stainless steel 304 (ER2) or 316L (ER4).

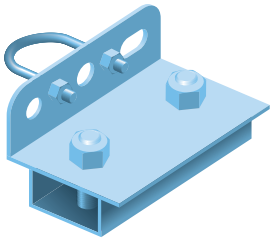

	Article number	kg/ unit
●	SHKW-30-FT	0.50
●	SHKW-30-ER2	0.49
●	SHKW-30-ER4	0.49

● In stock ● Limited stock ● On request

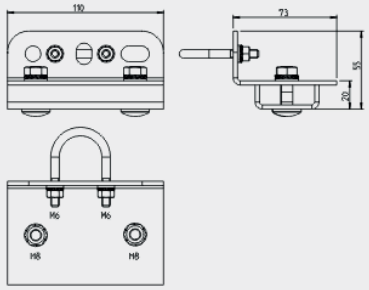

SHKWS-30 | Eurostrut | Mounting Bracket Rotatable 30mm

SPECIFICATIONS

- For SR-30 and SRL-30 cable protection tubes.
- Carbon steel S235JRG, standard surface finish is hot dip galvanized (FT), in accordance with NEN-EN-ISO 1461.
- Thickness layer 45 µm.
- Also available in stainless steel 304 (ER2) or 316L (ER4).

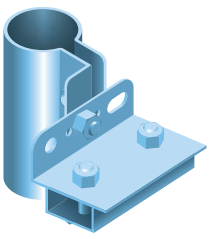

	Article number	kg/ unit
●	SHKWS-30-FT	0.68
●	SHKWS-30-ER2	0.67
●	SHKWS-30-ER4	0.67

● In stock ● Limited stock ● On request

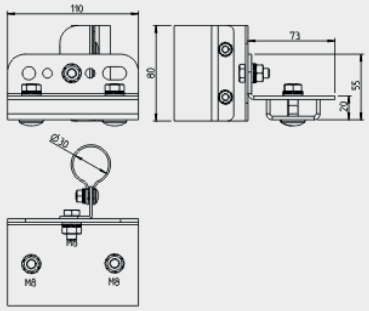

SRS-30 | Eurostrut | Pipe Clamp 30mm

SPECIFICATIONS

- For SR-30 and SRL-30 cable protection tubes.
- Holes 9x13mm for M8.
- Carbon steel S235JRG, standard surface finish is hot dip galvanized (FT), in accordance with NEN-EN-ISO 1461.
- Thickness layer 45 µm.
- Also available in stainless steel 304 (ER2) or 316L (ER4).

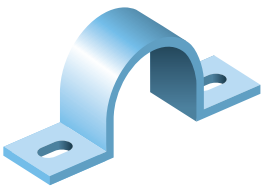

	Article number	D mm	E mm	kg/ unit
●	SRS-30-FT	30	1.5	0.06
●	SRS-30-ER2	30	1.5	0.05
●	SRS-30-ER4	30	1.5	0.05

● In stock ● Limited stock ● On request

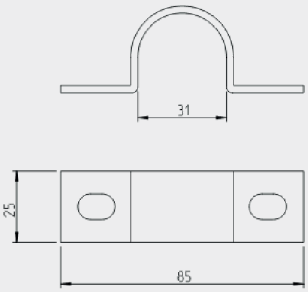

| + 31 10 522 33 51 | info@eurostrut.com | eurostrut.com

SBD-30 | Eurostrut | Thread / Pendant Pipe Clamp 30mm

SPECIFICATIONS

- For SR-30 and SRL-30 cable protection tubes.
- Incl. 2x fixing set (nut/bolt/washer).
- One piece for bolt of thread M8.
- Carbon steel S235JRG, standard surface finish is hot dip galvanized (FT), in accordance with NEN-EN-ISO 1461.
- Thickness layer 45 µm.
- Also available in stainless steel 304 (ER2) or 316L (ER4).

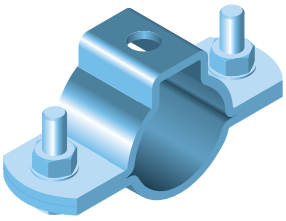

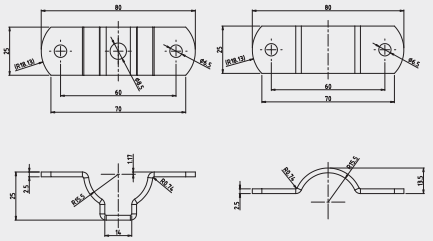

	Article number	D mm	E mm	kg/ unit
●	SBD-30-FT	30	2.5	0.48
●	SBD-30-ER2	30	2.5	0.44
●	SBD-30-ER4	30	2.5	0.44

● In stock ● Limited stock ● On request

SAS-30 | Eurostrut | Pipe Clamp 30mm with Mounting Profile

SPECIFICATIONS

- For SR-30 and SRL-30 cable protection tubes.
- Incl. SS-9-30-ER2 Hose Clamp.
- Size slot 16mm.
- Carbon steel S235JRG, standard surface finish is hot dip galvanized (FT), in accordance with NEN-EN-ISO 1461.
- Thickness layer 45 µm.
- Also available in stainless steel 304 (ER2).

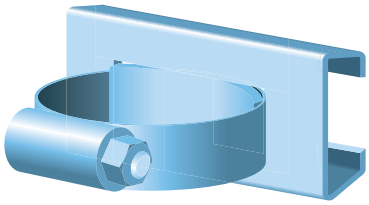

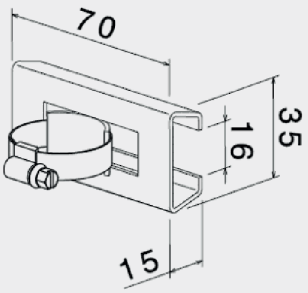

	Article number	D mm	kg/ unit
●	SAS-30-FT	30	0.062
●	SAS-30-ER2	30	0.062

● In stock ● Limited stock ● On request

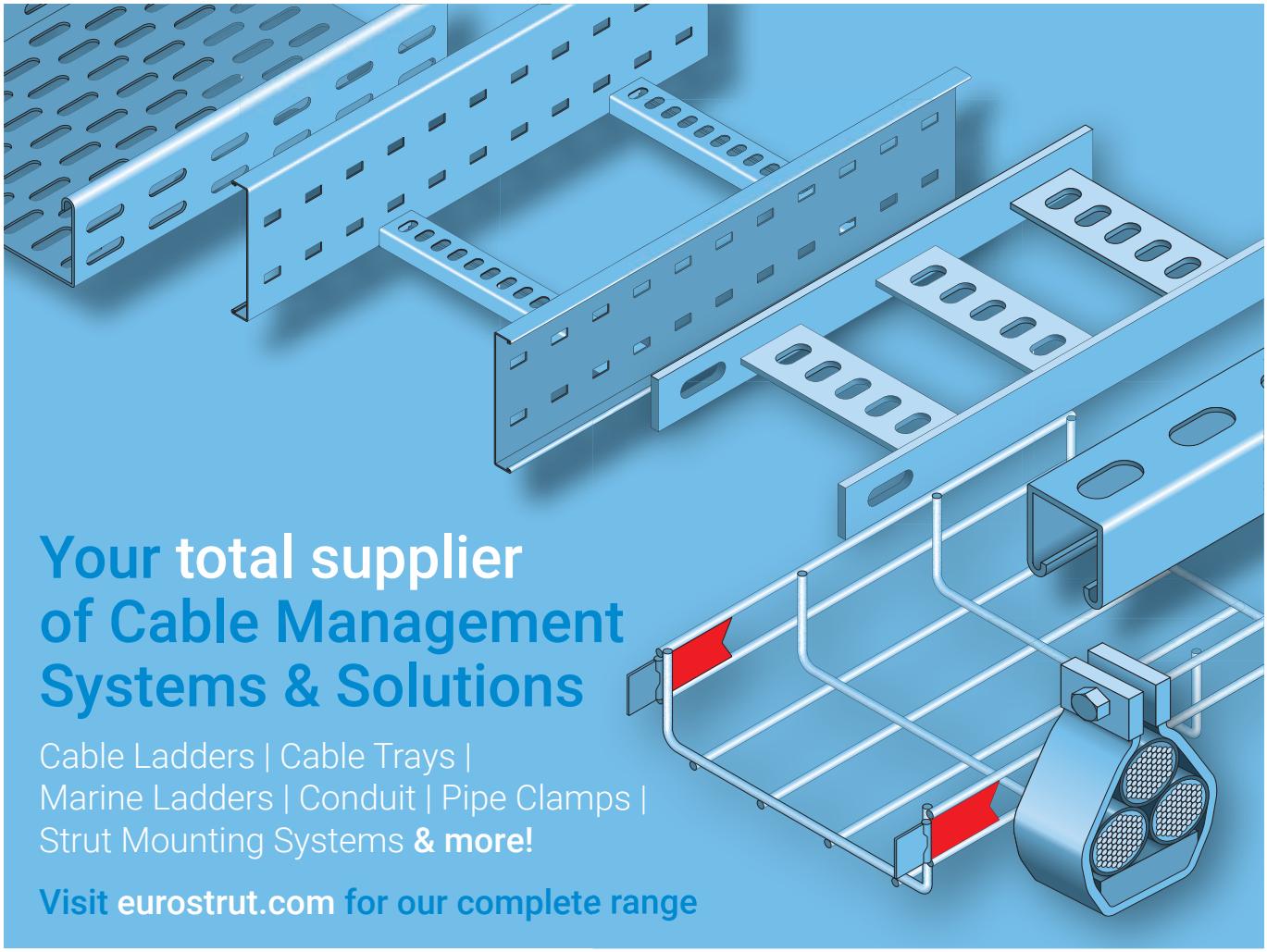

SS-9-30 | Eurostrut | Hose Clamp 30mm

SPECIFICATIONS

- Also named Pipe Clamp.
- For SR-30 and SRL-30 cable protection tubes.
- Available in stainless steel 304 (ER2) or 316L (ER4).

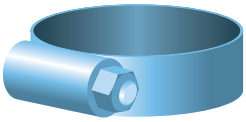

	Article number	D mm	W mm	kg/ unit
●	SS-9-30-ER2	30	9	0.015
●	SS-9-30-ER4	30	9	0.015

● In stock ● Limited stock ● On request

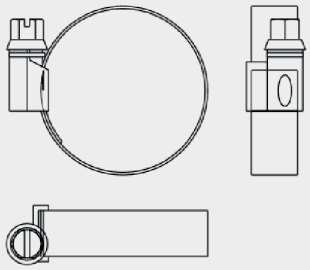

SRBS | Eurostrut | U-bolt for Cable Protection Tube 30mm

SPECIFICATIONS

- Including 2x nut and washer
- Carbon steel S235JRG, standard surface finish is hot dip galvanized (FT), in accordance with NEN-EN-ISO 1461.
- Thickness layer 45 µm.
- Also available in stainless steel 304 (ER2) or 316L (ER4).

	Article number	D mm	M	kg/ unit
●	SRBS-6-30-FT	30	M6	-
●	SRBS-6-30-ER2	30	M6	-
●	SRBS-6-30-ER4	30	M6	-
●	SRBS-8-30-FT	30	M8	-
●	SRBS-8-30-ER2	30	M8	-
●	SRBS-8-30-ER4	30	M8	-
●	SRBS-10-30-FT	30	M10	-
●	SRBS-10-30-ER2	30	M10	-
●	SRBS-10-30-ER4	30	M10	-

● In stock ● Limited stock ● On request ● Not available

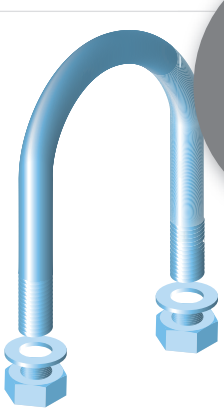

For our complete range, visit **eurostrut.com**

SEO-30 | Eurostrut | End Cap Open PVC 30mm

SPECIFICATIONS

- For SR-30 and SRL-30 cable protection tubes.
- Material: pvc plastisol (non phthalate).
- Color: yellow RAL1021 or black
- For accident protection according to DIN 4118.

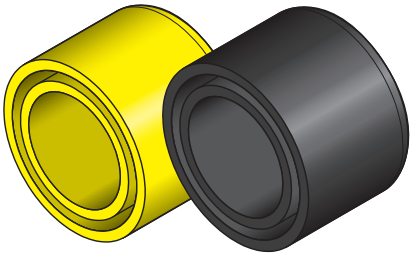

	Article number	Color	D mm	kg/ unit
●	SEO-30-K	Yellow	30	0.015
●	SEO-30-B	Black	30	0.015

● In stock ● Limited stock ● On request

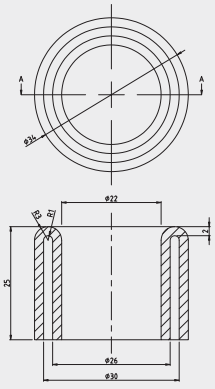

SEG-30 | Eurostrut | End Cap Closed 30mm

SPECIFICATIONS

- For SR-30 and SRL-30 cable protection tubes.
- Material: pvc plastisol (non phthalate).
- Color: yellow RAL1021 or black
- For accident protection according to DIN 4118.

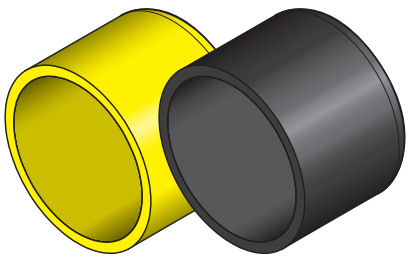

	Article number	Color	D mm	kg/ unit
●	SEG-30-K	Yellow	30	0.015
●	SEG-30-B	Black	30	0.015

● In stock ● Limited stock ● On request

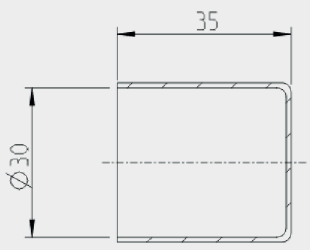

SK | Eurostrut | Edge Protection Strap 10x14.5mm

SPECIFICATIONS

- Material: rubber with steel core.
- Color: black.
- Clamping range: 1.0 - 4.0mm.
- Delivery unit: meter.

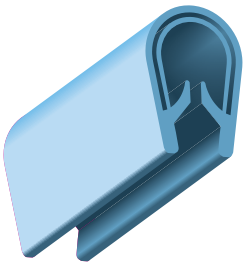

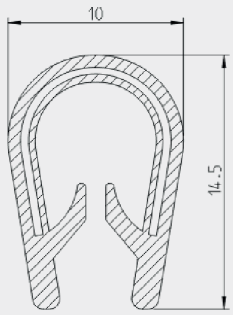

	Article number	W mm	H mm	kg/ meter
●	SK	10	14.5	0.14

● In stock ● Limited stock ● On request

SKK | Eurostrut | Edge Protection Strap 6x9mm

SPECIFICATIONS

- Material: rubber with steel core.
- Color: black.
- Clamping range: 1.0 - 2.0mm.
- Delivery unit: meter.

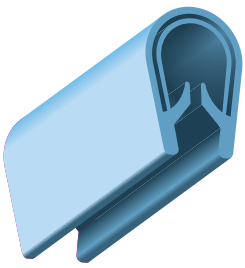

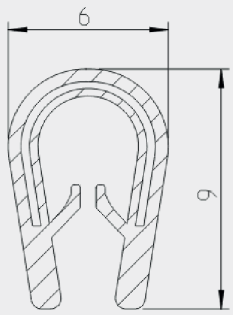

	Article number	W mm	H mm	kg/ meter
●	SKK	6	9	0.055

● In stock ● Limited stock ● On request

Stay up to date!

Follow **@eurostrut** on social media and sign in to our newsletter:
www.eurostrut.com/en/newsletter



SWS-30-K | Eurostrut | Warning Sign High Voltage 30mm

SPECIFICATIONS

- For SR-30 and SRL-30 cable protection tubes.
- Material: plastic.
- Color: yellow with red symbol.
- Self adhesive.

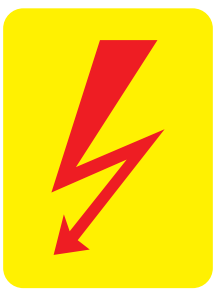

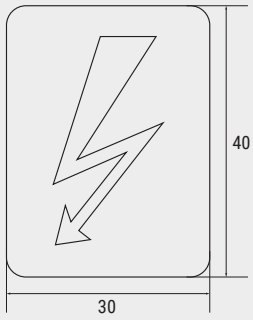

	Article number	W mm	H mm	kg/ unit
●	SWS-30-K	30	40	0.02

● In stock ● Limited stock ● On request



Your total supplier of Cable Management Systems & Solutions

Cable Ladders | Cable Trays |
Marine Ladders | Conduit | Pipe Clamps |
Strut Mounting Systems **& more!**

Visit eurostrut.com for our complete range

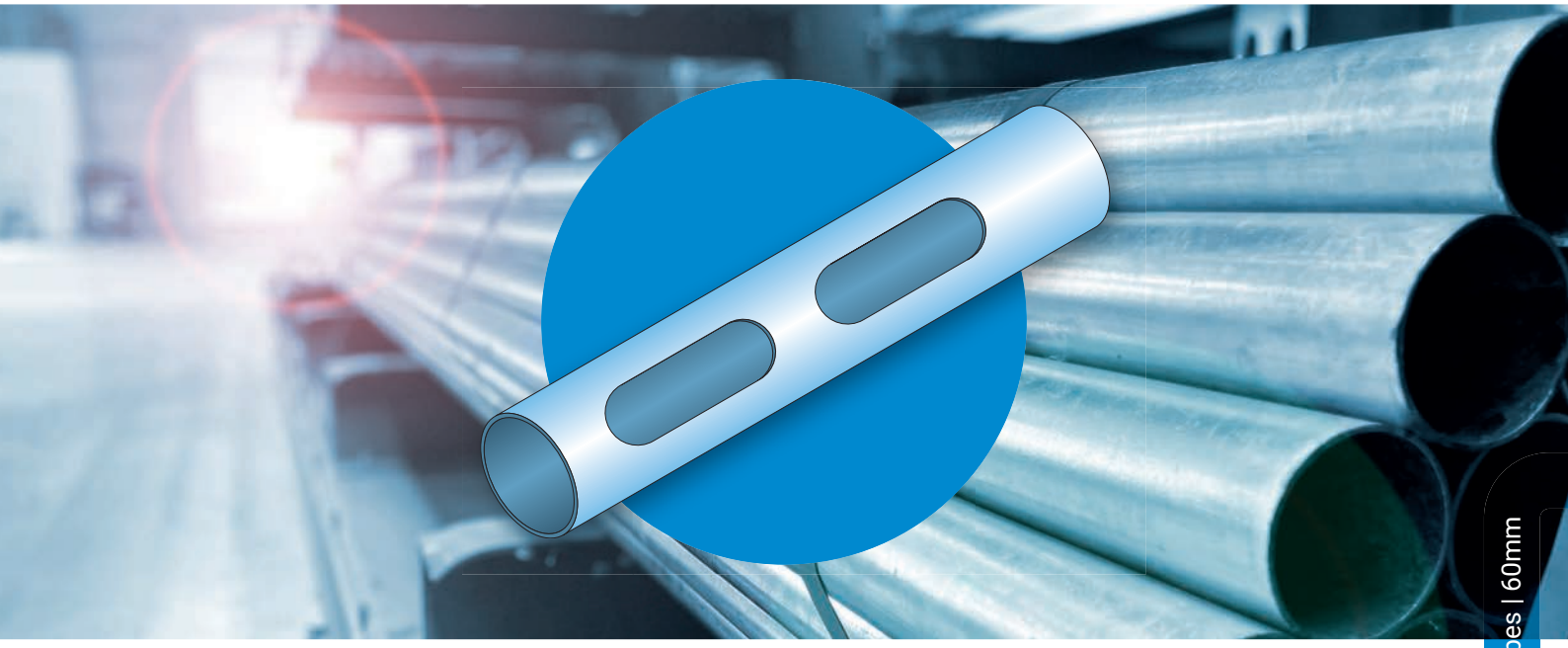

Cable Tube System
Cable Protection Tubes | 60mm

For environments where more protection
(of corrosion or chemicals) of cables is desired.

General specifications

- The Eurostrut cable protection tube system is manufactured in accordance with BS EN 61537 / IEC 61537.
- Standard material for cable protection system is carbon steel S235JRG, standard surface finish is hot dip galvanized (FT), in accordance with NEN-EN-ISO 1461.
- Thickness layer 45 µm.
- Materials are also available in stainless steel 316L.
- On request materials are available in stainless steel 304.
- The standard diameters are 30 and 60 mm.
- 48 mm diameter available on request.

General conditions

- Eurostrut Support Systems & Solutions B.V. is not liable for cable tubes and accessories that are incorrectly installed or where different parts or maintenance methods are applied.
- Although the product information shown in this catalog is accurate and reliable, Eurostrut Support Systems & Solutions B.V. can not be held responsible and liable for inaccuracies.
- The performance data are specific and may be subject to variations due to normal manufacturing tolerances.
- Eurostrut Support Systems & Solutions B.V. reserves the right to change performance information or specifications at any time without notice.

2ba

The convenience of 2ba

Eurostrut's products are listed with all associated information in 2BA's central article database. Product, price and stock information must be continuously available in order to operate efficiently. The 2BA data pool offers the solution.

2ba.nl

The main advantages of 2BA:

- Design, calculate and order more efficiently because all product and price information comes from the same source.
- Data is directly available via the leading ERP software packages or your own custom system.
- You have your own net purchase prices based on Eurostrut's agreed purchasing conditions.

Eurostrut is **ISO 9001 certified**, ensuring quality management across all processes to meet customer requirements and specifications.

By achieving **step 3** certification on the **CO_2 Performance Ladder**, Eurostrut demonstrates its commitment to environmental responsibility and fostering a healthy living environment.

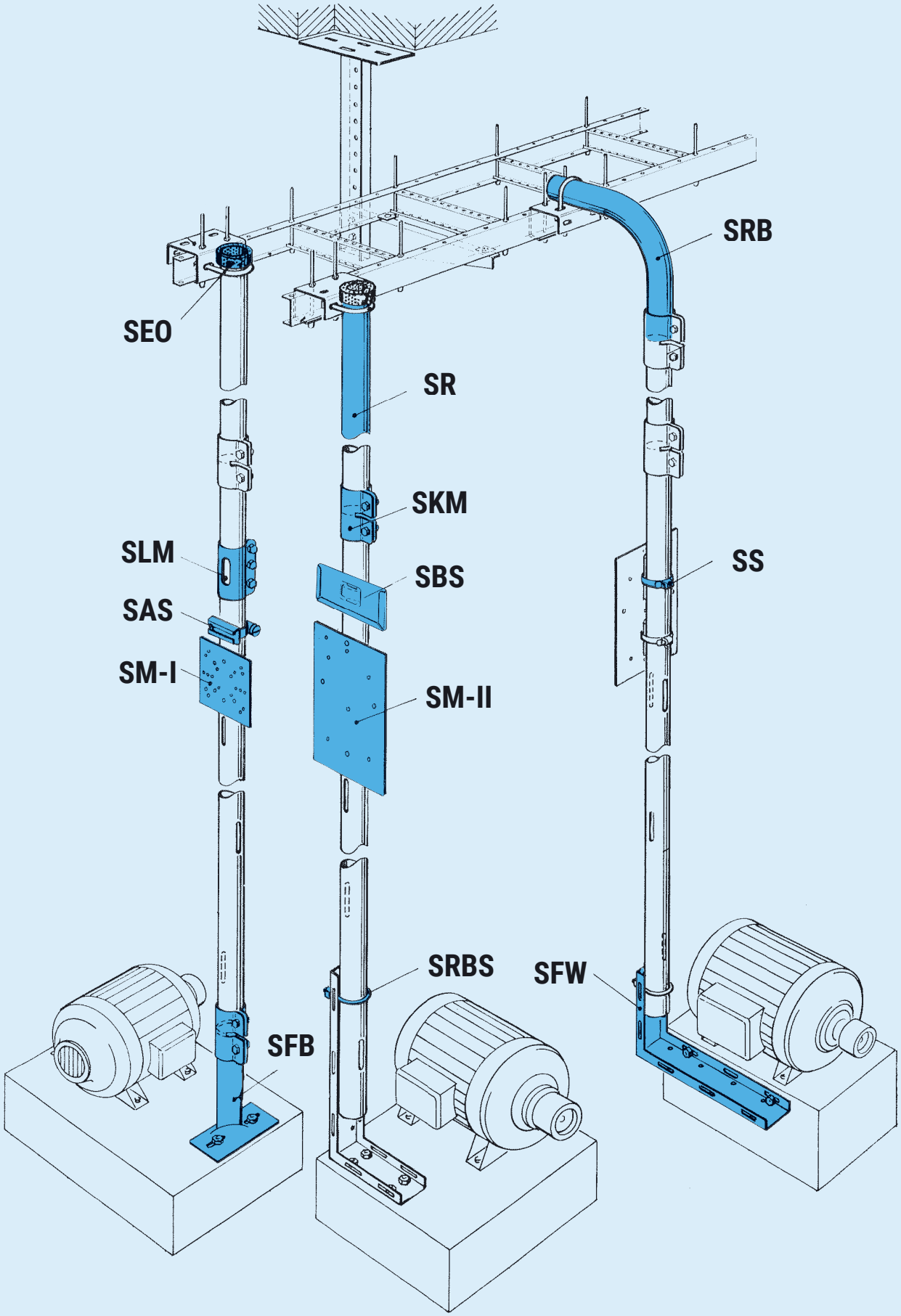
SRB
SEO
SR
SKM
SLM
SBS
SS
SAS
SM-I
SM-II
SRBS
SFW
SFB

SR-60 | Eurostrut | Cable Protection Tube 60mm

SPECIFICATIONS

- Cold rolled (not bendable).
- Carbon steel S235JRG, standard surface finish is hot dip galvanized (FT), in accordance with NEN-EN-ISO 1461.
- Thickness layer 45 µm.
- Also available in stainless steel 304 (ER2) or 316L (ER4).

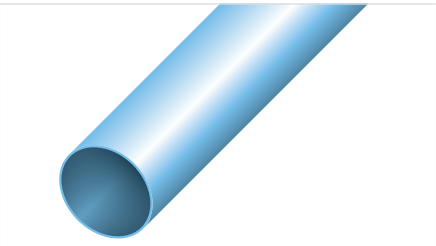

	Article number	L mm	D mm	E mm	kg/ meter
●	SR-60-FT	6000	60.3	2	17.4
●	SR-60-ER2	6000	60.3	2	17.4
●	SR-60-ER4	6000	60.3	2	17.4

● In stock ● Limited stock ● On request

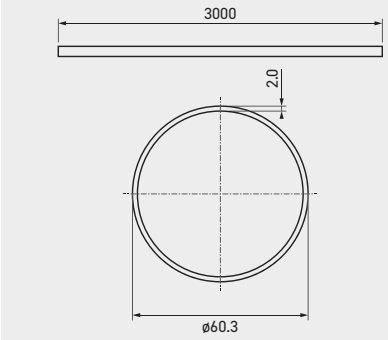

SRL-60 | Eurostrut | Cable Protection Tube Slotted 30mm

SPECIFICATIONS

- With lasered holes 100x28mm.
- Cold rolled (not bendable).
- Carbon steel S235JRG, standard surface finish is hot dip galvanized (FT), in accordance with NEN-EN-ISO 1461.
- Thickness layer 45 µm.
- Also available in stainless steel 304 (ER2) or 316L (ER4).

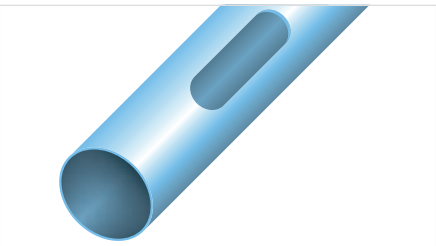

	Article number	L mm	D mm	E mm	kg/ unit
●	SRL-60-FT	6000	60.3	2	17.0
●	SRL-60-ER2	6000	60.3	2	17.0
●	SRL-60-ER4	6000	60.3	2	17.0

● In stock ● Limited stock ● On request

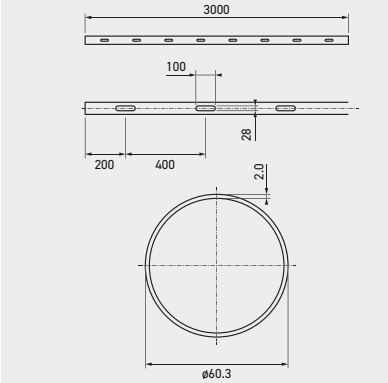

SRB-45-60 | Eurostrut | Bend 45° Closed 60mm

SPECIFICATIONS

- For SR-60 and SRL-60 cable protection tubes.
- SKM-60 coupling socket required.
- Carbon steel S235JRG, standard surface finish is hot dip galvanized (FT), in accordance with NEN-EN-ISO 1461.
- Thickness layer 45 µm.
- Also available in stainless steel 304 (ER2) or 316L (ER4).



	Article number	∠	D mm	E mm	kg/ unit
●	SRB-45-60-FT	45°	60.3	1.8	0.98
●	SRB-45-60-ER2	45°	60.3	1.8	0.98
●	SRB-45-60-ER4	45°	60.3	1.8	0.98

● In stock ● Limited stock ● On request

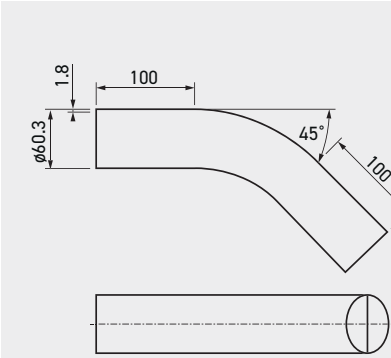

SRB-90-60 | Eurostrut | Bend 90° Closed 60mm

SPECIFICATIONS

- For SR-60 and SRL-60 cable protection tubes.
- SKM-60 coupling socket required.
- Carbon steel S235JRG, standard surface finish is hot dip galvanized (FT), in accordance with NEN-EN-ISO 1461.
- Thickness layer 45 µm.
- Also available in stainless steel 304 (ER2) or 316L (ER4).



	Article number	∠	D mm	E mm	kg/ unit
●	SRB-90-60-FT	90°	60.3	2	1.20
●	SRB-90-60-ER2	90°	60.3	2	1.26
●	SRB-90-60-ER4	90°	60.3	2	1.26

● In stock ● Limited stock ● On request

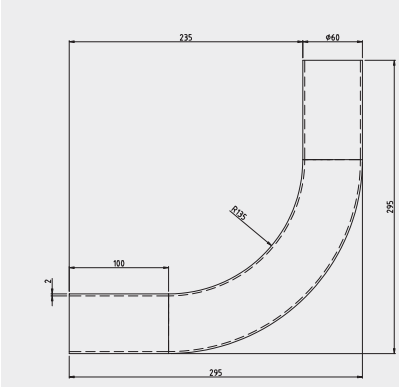

SRBO-45-60 | Eurostrut | Bend 45° Open 60mm

SPECIFICATIONS

- For SR-60 and SRL-60 cable protection tubes.
- SKM-60 Coupling Socket required
- Carbon steel S235JRG, standard surface finish is hot dip galvanized (FT), in accordance with NEN-EN-ISO 1461.
- Thickness layer 45 µm.
- Also available in stainless steel 304 (ER2) or 316L (ER4).

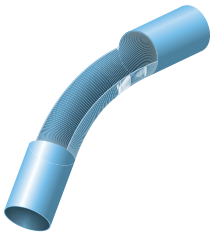

	Article number	R mm	D mm	E mm	kg/ unit
●	SRBO-45-90-FT	120	60.3	1.5	0.78
●	SRBO-45-90-ER2	120	60.3	1.5	0.78
●	SRBO-45-90-ER4	120	60.3	1.5	0.78

● In stock ● Limited stock ● On request

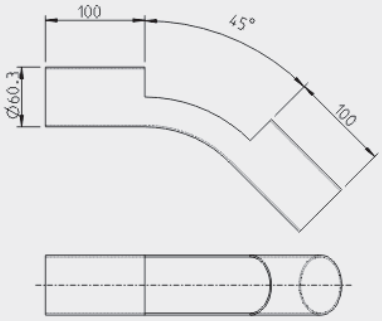

SRBO-90-60 | Eurostrut | Bend 90° Open 60mm

SPECIFICATIONS

- For SR-60 and SRL-60 cable protection tubes.
- SKM-60 Coupling Socket required
- Carbon steel S235JRG, standard surface finish is hot dip galvanized (FT), in accordance with NEN-EN-ISO 1461.
- Thickness layer 45 µm.
- Also available in stainless steel 304 (ER2) or 316L (ER4).



	Article number	R mm	D mm	E mm	kg/ unit
●	SRBO-90-90-FT	120	60.3	1.5	0.88
●	SRBO-90-90-ER2	120	60.3	1.5	0.90
●	SRBO-90-90-ER4	120	60.3	1.5	0.90

● In stock ● Limited stock ● On request

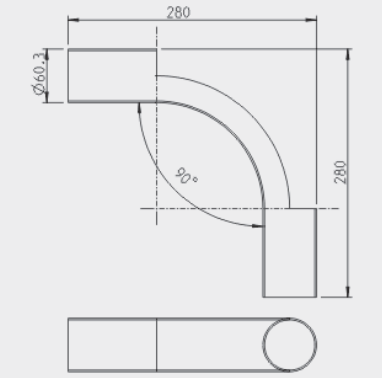

STO-60 | Eurostrut | T-piece Open 60mm

SPECIFICATIONS

- For SR-60 and SRL-60 cable protection tubes.
- Carbon steel S235JRG, standard surface finish is hot dip galvanized (FT), in accordance with NEN-EN-ISO 1461.
- Thickness layer 45 µm.
- Also available in stainless steel 304 (ER2) or 316L (ER4).

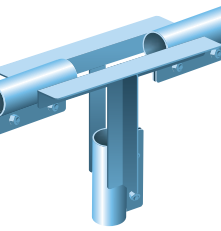

	Article number	D mm	E mm	kg/ unit
●	STO-60-FT	60	1.5	3.92
●	STO-60-ER2	60	1.5	3.43
●	STO-60-ER4	60	1.5	3.43

● In stock ● Limited stock ● On request

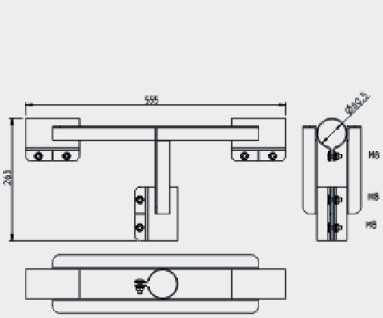

SKM-60 | Eurostrut | Coupling Socket 60mm

SPECIFICATIONS

- For SR-60 and SRL-60 cable protection tubes.
- Lenght 115mm.
- Carbon steel S235JRG, standard surface finish is hot dip galvanized (FT), in accordance with NEN-EN-ISO 1461.
- Thickness layer 45 µm.
- Also available in stainless steel 304 (ER2) or 316L (ER4).

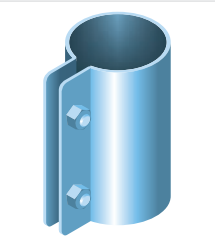

	Article number	D mm	E mm	kg/ unit
●	SKM-60-FT	60.8	2.5	0.59
●	SKM-60-ER2	60.8	2.5	0.59
●	SKM-60-ER4	60.8	2.5	0.59

● In stock ● Limited stock ● On request

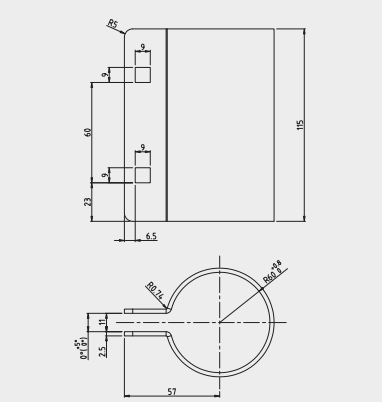

| + 31 10 522 33 51 | info@eurostrut.com | eurostrut.com

SLM-60 | Eurostrut | Coupling Socket with Cable Output 60mm

SPECIFICATIONS

- For SR-60 and SRL-60 cable protection tubes.
- Lenght 130mm.
- Cable output hole 90x40mm.
- Carbon steel S235JRG, standard surface finish is hot dip galvanized (FT), in accordance with NEN-EN-ISO 1461.
- Thickness layer 45 µm.
- Also available in stainless steel 304 (ER2) or 316L (ER4).

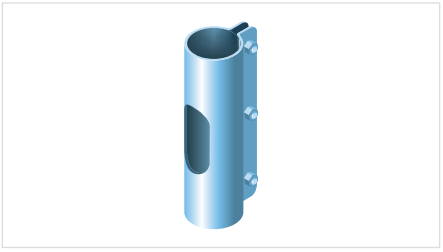

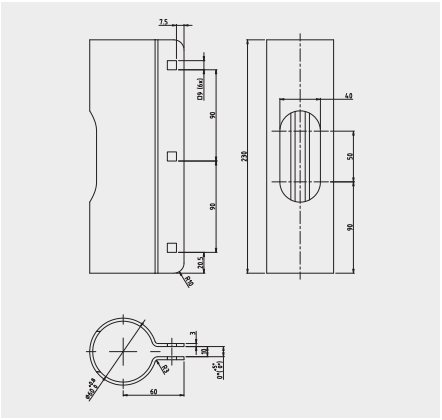

	Article number	D mm	E mm	kg/ unit
●	SLM-60-FT	60.8	3	1.12
●	SLM-60-ER2	60.8	3	1.04
●	SLM-60-ER4	60.8	3	1.04

● In stock ● Limited stock ● On request

SFB-60 | Eurostrut | Floor Mounting 60mm

SPECIFICATIONS

- For SR-60 and SRL-60 cable protection tubes.
- Carbon steel S235JRG, standard surface finish is hot dip galvanized (FT), in accordance with NEN-EN-ISO 1461.
- Thickness layer 45 µm.
- Also available in stainless steel 304 (ER2) or 316L (ER4).

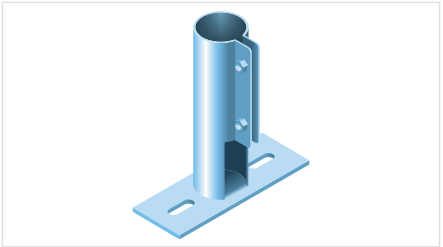

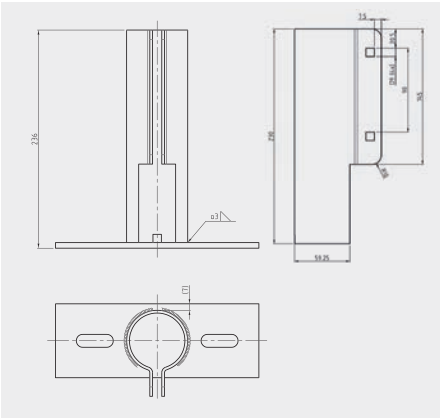

	Article number	D mm	E mm	kg/ unit
●	SFB-60-FT	60.8	3	1.76
●	SFB-60-ER2	60.8	3	1.48
●	SFB-60-ER4	60.8	3	1.48

● In stock ● Limited stock ● On request

SFW-60 | Eurostrut | Floor Mounting with Angle 60mm

SPECIFICATIONS

- For SR-60 and SRL-60 cable protection tubes.
- Angle 90˚.
- Carbon steel S235JRG, standard surface finish is hot dip galvanized (FT), in accordance with NEN-EN-ISO 1461.
- Thickness layer 45 µm.
- Also available in stainless steel 304 (ER2) or 316L (ER4).

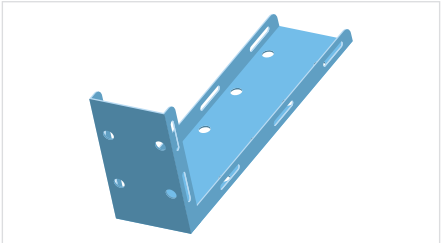

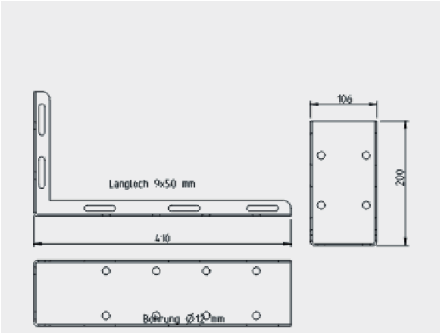

	Article number	D mm	E mm	kg/ unit
●	SFW-60-FT	60	1.5	1.94
●	SFW-60-ER2	60	1.5	1.94
●	SFW-60-ER4	60	1.5	1.94

● In stock ● Limited stock ● On request

SMI-60 | Eurostrut | Eurostrut Mounting Plate 165x175mm 60mm

SPECIFICATIONS

- Incl. SS-9-60-ER2/ER4 Hose Clamp.
- Carbon steel S235JRG, standard surface finish is hot dip galvanized (FT), in accordance with NEN-EN-ISO 1461.
- Thickness layer 45 µm.
- Also available in stainless steel 304 (ER2) or 316L (ER4).



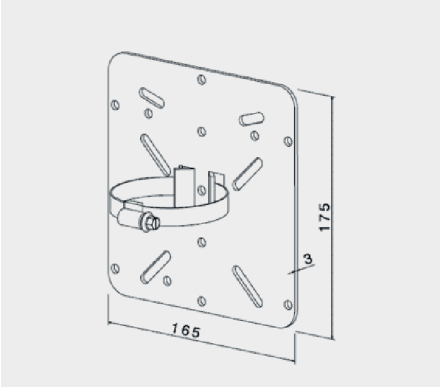

	Article number	D mm	E mm	kg/ unit
●	SMI-60-FT	60	3	0.60
●	SMI-60-ER2	60	3	0.58
●	SMI-60-ER4	60	3	0.58

● In stock ● Limited stock ● On request

SMII-60 | Eurostrut | Eurostrut Mounting Plate 175x260mm 60mm

SPECIFICATIONS

- Incl. 2x SS-9-30-ER2/ER4 Hose Clamp.
- Carbon steel S235JRG, standard surface finish is hot dip galvanized (FT), in accordance with NEN-EN-ISO 1461.
- Thickness layer 45 µm.
- Also available in stainless steel 304 (ER2) or 316L (ER4).



	Article number	D mm	E mm	kg/ unit
●	SMII-60-FT	60	3	1.00
●	SMII-60-ER2	60	3	1.00
●	SMII-60-ER4	60	3	1.00

● In stock ● Limited stock ● On request

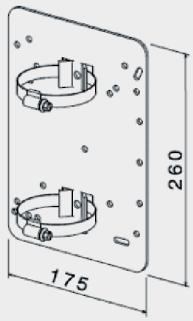

SMIII-60 | Eurostrut | Mounting Plate 270x380mm 60mm

SPECIFICATIONS

- Incl. 2x SS-9-30-ER2/ER4 Hose Clamp.
- Carbon steel S235JRG, standard surface finish is hot dip galvanized (FT), in accordance with NEN-EN-ISO 1461.
- Thickness layer 45 µm.
- Also available in stainless steel 304 (ER2) or 316L (ER4).



	Article number	D mm	E mm	kg/ unit
●	SMIII-60-FT	60	3	2.10
●	SMIII-60-ER2	60	3	2.10
●	SMIII-60-ER4	60	3	2.10

● In stock ● Limited stock ● On request

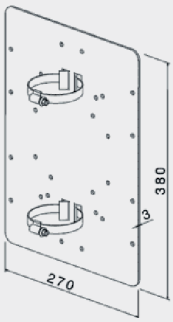

SHKW-60 | Eurostrut | Mounting Bracket 60mm

SPECIFICATIONS

- For SR-60 and SRL-60 cable protection tubes.
- Carbon steel S235JRG, standard surface finish is hot dip galvanized (FT), in accordance with NEN-EN-ISO 1461.
- Thickness layer 45 µm.
- Also available in stainless steel 304 (ER2) or 316L (ER4).

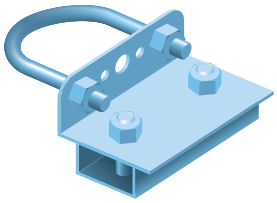

	Article number	kg/ unit
●	SHKW-60-FT	0.67
●	SHKW-60-ER2	0.55
●	SHKW-60-ER4	0.55

● In stock ● Limited stock ● On request

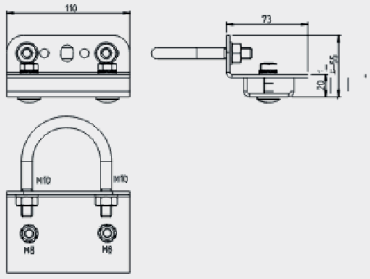

SHKWS-60 | Eurostrut | Mounting Bracket Rotatable 60mm

SPECIFICATIONS

- For SR-60 and SRL-60 cable protection tubes.
- Carbon steel S235JRG, standard surface finish is hot dip galvanized (FT), in accordance with NEN-EN-ISO 1461.
- Thickness layer 45 µm.
- Also available in stainless steel 304 (ER2) or 316L (ER4).

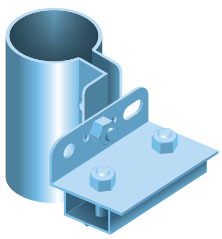

	Article number	kg/ unit
●	SHKWS-60-FT	1.19
●	SHKWS-60-ER2	1.16
●	SHKWS-60-ER4	1.16

● In stock ● Limited stock ● On request

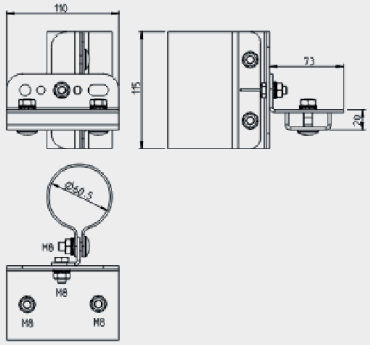

| + 31 10 522 33 51 | info@eurostrut.com | **eurostrut.com**

SRS-60 | Eurostrut | Eurostrut Pipe Clamp 60mm

SPECIFICATIONS

- For SR-60 and SRL-36 cable protection tubes.
- Holes 9x17mm for M8.
- Carbon steel S235JRG, standard surface finish is hot dip galvanized (FT), in accordance with NEN-EN-ISO 1461.
- Thickness layer 45 µm.
- Also available in stainless steel 304 (ER2) or 316L (ER4).

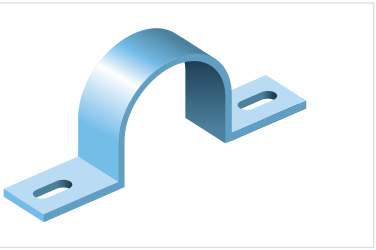

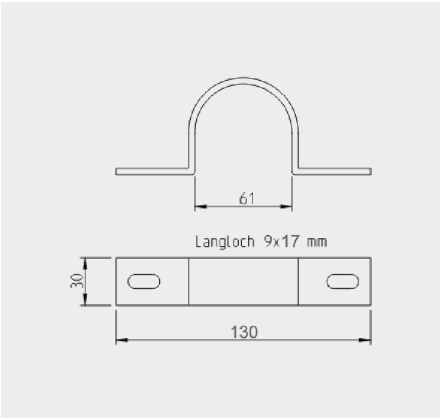

	Article number	D mm	E mm	kg/ unit
●	SRS-60-FT	30	3	0.16
●	SRS-60-ER2	30	3	0.16
●	SRS-60-ER4	30	3	0.16

● In stock ● Limited stock ● On request

SBD-60 | Eurostrut | Thread / Pendant Pipe Clamp 60mm

SPECIFICATIONS

- or SR-60 and SRL-60 cable protection tubes.
- Incl. 2x fixing set (nut/bolt/washer).
- One piece for bolt of thread M8.
- Carbon steel S235JRG, standard surface finish is hot dip galvanized (FT), in accordance with NEN-EN-ISO 1461.
- Thickness layer 45 µm.
- Also available in stainless steel 304 (ER2) or 316L (ER4).

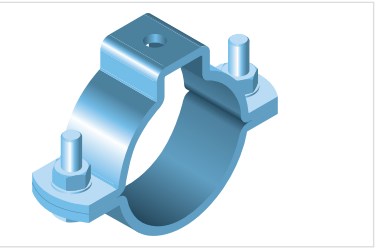

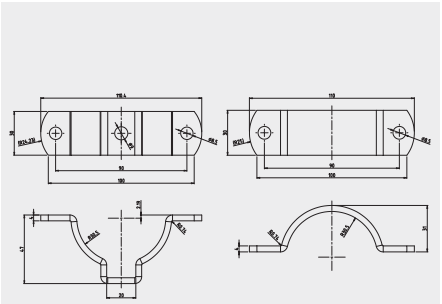

	Article number	D mm	E mm	kg/ unit
●	SBD-60-FT	60	4	0.32
●	SBD-60-ER2	60	4	0.32
●	SBD-60-ER4	60	4	0.32

● In stock ● Limited stock ● On request

SAS-60 | Eurostrut | Pipe Clamp 60mm with Mounting Profile

SPECIFICATIONS

- For SR-60 and SRL-60 cable protection tubes.
- Incl. SS-9-60-ER2 Hose Clamp.
- Size slot 16mm.
- Carbon steel S235JRG, standard surface finish is hot dip galvanized (FT), in accordance with NEN-EN-ISO 1461.
- Thickness layer 45 µm.
- Also available in stainless steel 304 (ER2).

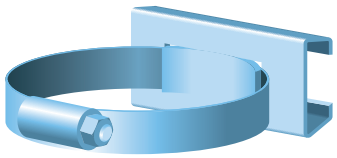

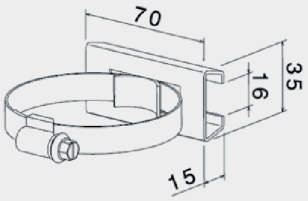

	Article number	D mm	kg/ unit
●	SAS-60-FT	60	0.08
●	SAS-60-ER2	60	0.08

● In stock ● Limited stock ● On request

SS-9-60 | Eurostrut | Hose Clamp 60mm

SPECIFICATIONS

- Also named Pipe Clamp.
- For SR-60 and SRL-60 cable protection tubes.
- Available in stainless steel 304 (ER2) or 316L (ER4).

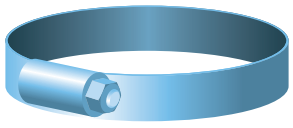

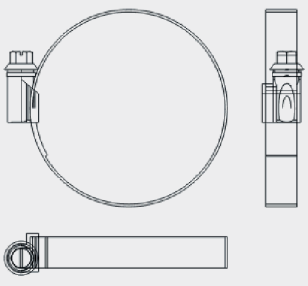

	Article number	D mm	W mm	kg/ unit
●	SS-9-60-ER2	60	9	0.04
●	SS-9-60-ER4	60	9	0.04

● In stock ● Limited stock ● On request

SEO-60 | Eurostrut | End Cap Open PVC 60mm

SPECIFICATIONS

- For SR-60 and SRL-60 cable protection tubes.
- Material: pvc plastisol (non phthalate).
- Color: yellow RAL1021 or black
- For accident protection according to DIN 4118.

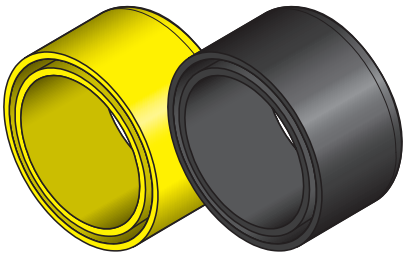

	Article number	Color	D mm	kg/ unit
●	SEO-60-K	Yellow	60	0.02
●	SEO-60-B	Black	60	0.02

● In stock ● Limited stock ● On request

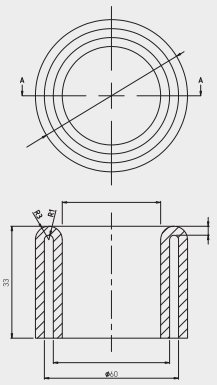

SEG-60 | Eurostrut | End Cap Closed 60mm

SPECIFICATIONS

- For SR-60 and SRL-60 cable protection tubes.
- Material: pvc plastisol (non phthalate).
- Color: yellow RAL1021 or black
- For accident protection according to DIN 4118.

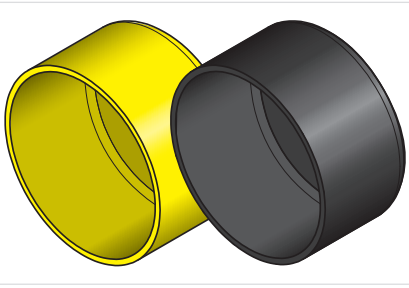

	Article number	Color	D mm	kg/ unit
●	SEG-60-K	Yellow	60	0.02
●	SEG-60-B	Black	60	0.02

● In stock ● Limited stock ● On request

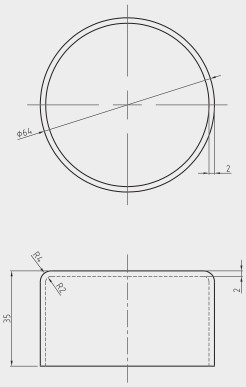

SK | Eurostrut | Edge Protection Strap 10x14.5mm

SPECIFICATIONS

- Material: rubber with steel core.
- Color: black.
- Clamping range: 1.0 - 4.0mm.
- Delivery unit: meter.



	Article number	W mm	H mm	kg/ meter
●	SK	10	14.5	0.14

● In stock ● Limited stock ● On request

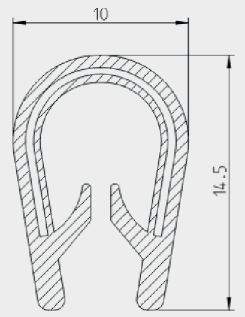

SKK | Eurostrut | Edge Protection Strap 6x9mm

SPECIFICATIONS

- Material: rubber with steel core.
- Color: black.
- Clamping range: 1.0 - 2.0mm.
- Delivery unit: meter.

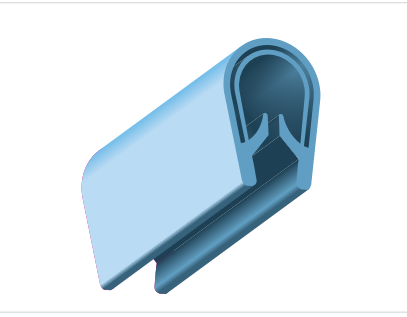

	Article number	W mm	H mm	kg/ meter
●	SKK	6	9	0.055

● In stock ● Limited stock ● On request

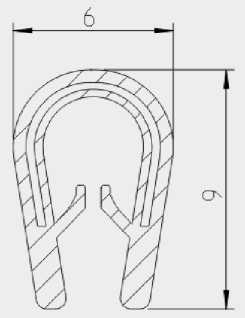

| + 31 10 522 33 51 | info@eurostrut.com | **eurostrut.com**

SKR-100-28-K | Eurostrut | Edge Protection Ring 100x28mm

SPECIFICATIONS

- For SRL-60 cable protection tubes with cable output.
- Material: PVC.
- Color: black.

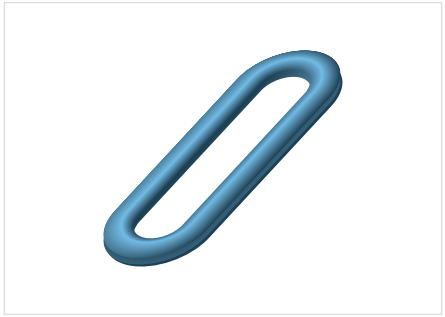

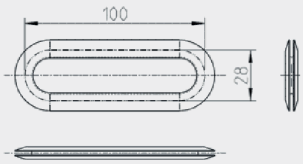

	Article number	W mm	H mm	kg/ unit
●	SKR-100-28-K	28	100	0.08

● In stock ● Limited stock ● On request

SKR-90-40-K | Eurostrut | Edge Protection Ring 90x40mm

SPECIFICATIONS

- For SLM-60 coupling socket with cable output.
- Material: PVC.
- Color: black.

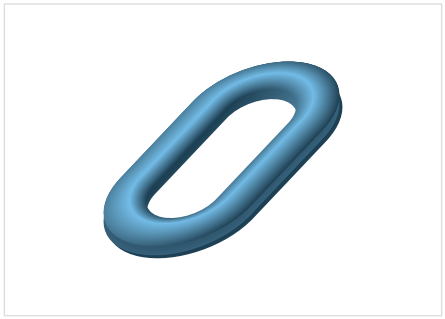

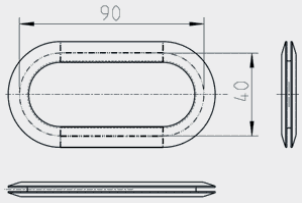

	Article number	W mm	H mm	kg/ unit
●	SKR-90-40-K	40	90	0.08

● In stock ● Limited stock ● On request

SWS-60-K | Eurostrut | Warning Sign High Voltage 60mm

SPECIFICATIONS

- For SR-60 and SRL-60 cable protection tubes.
- Material: plastic.
- Color: yellow with red symbol.
- Self adhesive.

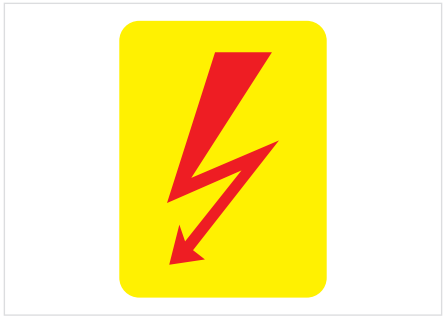

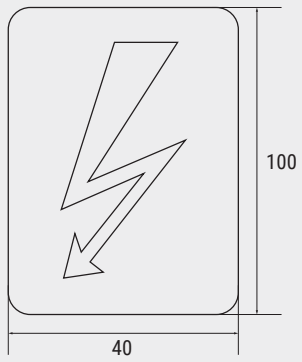

	Article number	W mm	H mm	kg/ unit
●	SWS-60-K	60	100	0.04

● In stock ● Limited stock ● On request

SRBS | Eurostrut | U-bolt for Cable Protection Tube 60mm

SPECIFICATIONS

- Including 2x nut and washer
- Carbon steel S235JRG, standard surface finish is hot dip galvanized (FT), in accordance with NEN-EN-ISO 1461.
- Thickness layer 45 µm.
- Also available in stainless steel 304 (ER2) or 316L (ER4).

	Article number	D mm	M	kg/ unit
●	SRBS-6-60-FT	60	M6	-
●	SRBS-6-60-ER2	60	M6	-
●	SRBS-6-60-ER4	60	M6	-
●	SRBS-8-60-FT	60	M8	-
●	SRBS-8-60-ER2	60	M8	-
●	SRBS-8-60-ER4	60	M8	-
●	SRBS-10-60-FT	60	M10	-
●	SRBS-10-60-ER2	60	M10	-
●	SRBS-10-60-ER4	60	M10	-

● In stock ● Limited stock ● On request ● Not available

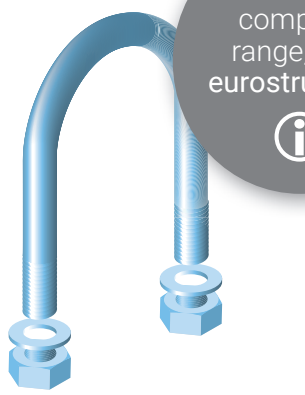

For our complete range, visit eurostrut.com

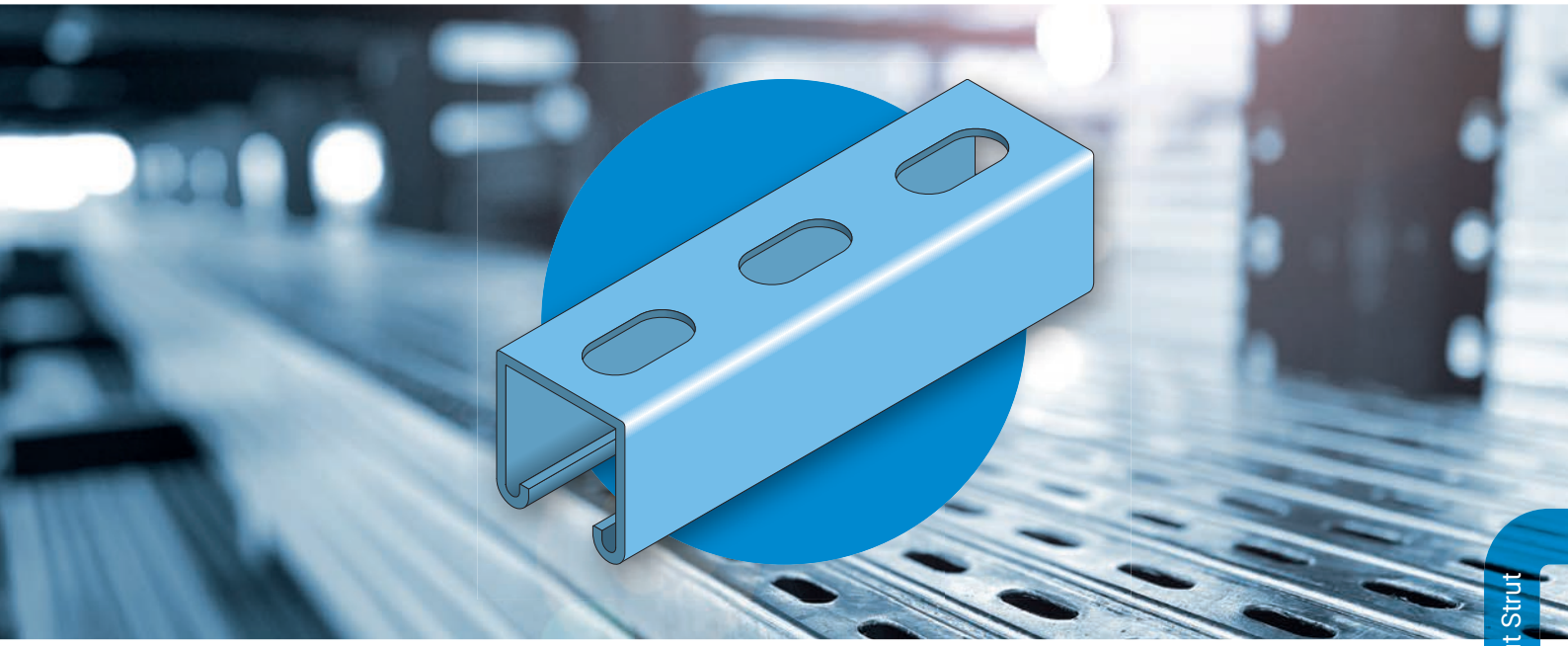

Mounting Systems
Eurostrut Strut
For light, medium and heavy duty applications with a broad range of accessories.

General specifications
- The Eurostrut strut system is manufactured in accordance with BS EN 61537 / IEC 61537.
- Standard material is carbon steel, standard surface finish is hot dip galvanized (HDG), in accordance with NEN-EN-ISO 1461.
- Thickness layer for strut channels (and most accessories) is 45 to 55 µm.
- (On request) most materials are also available in:
  - Pre galvanized (PG).
  - Stainless steel A4 / 316L (SS).
  - Stainless steel A2 / 304 (SS304).
  - Plain oil finished (black) (POF).

General conditions
- Eurostrut Support Systems & Solutions B.V. is not liable for strut channels and accessories that are incorrectly installed or where different parts or maintenance methods are applied.
- Although the product information shown in this catalog is accurate and reliable, Eurostrut Support Systems & Solutions B.V. can not be held responsible and liable for inaccuracies.
- The performance data are specific and may be subject to variations due to normal manufacturing tolerances.
- Eurostrut Support Systems & Solutions B.V. reserves the right to change performance information or specifications at any time without notice.

2ba

The convenience of 2ba
Eurostrut's products are listed with all associated information in 2BA's central article database. Product, price and stock information must be continuously available in order to operate efficiently. The 2BA data pool offers the solution.
2ba.nl

The main advantages of 2BA:
- Design, calculate and order more efficiently because all product and price information comes from the same source.
- Data is directly available via the leading ERP software packages or your own custom system.
- You have your own net purchase prices based on Eurostrut's agreed purchasing conditions.

Eurostrut is **ISO 9001 certified**, ensuring quality management across all processes to meet customer requirements and specifications.

By achieving **step 3** certification on the **CO_2 Performance Ladder**, Eurostrut demonstrates its commitment to environmental responsibility and fostering a healthy living environment.

ES3300 | Eurostrut | Plain Strut Channel 21x41mm

SPECIFICATIONS

- For light and medium duty applications.
- Available in:
  - Hot dip galvanized (HDG) carbon steel, in accordance with NEN-EN-ISO 1461.
    - Thickness layer 45 to 55 µm.
  - Pre galvanized (PG).
  - Stainless steel A4 / 316L (SS).
  - Plain oil finished (black) (POF).
- Length 6 meter.



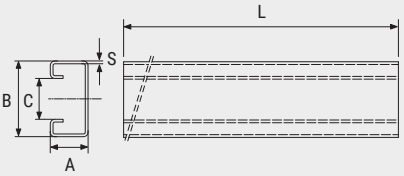

	Article number	L mm	AxB mm	C mm	S mm		kg/ unit
●	ES3300HDG	6	21x41	22	2,5	1	10,60
●	ES3300PG	6	21x41	22	2,5	1	10,20
●	ES3300SS	6	21x41	22	2,5	1	10,20
●	ES3300POF	6	21x41	22	2,5	1	10,20

● In stock ● Limited stock ● On request

LOAD DATA

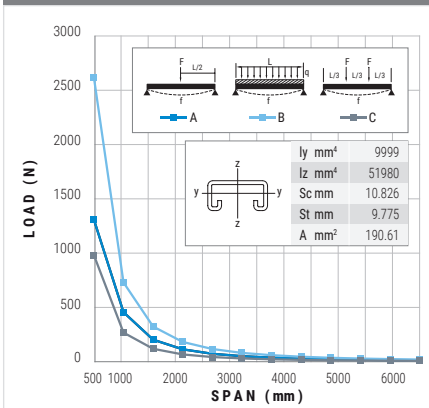

σ_{zul}=160 N/mm
f_{zul}=l/200

ES3300T | Eurostrut | Slotted Strut Channel 21x41mm

SPECIFICATIONS

- For light and medium duty applications.
- Available in:
  - Hot dip galvanized (HDG) carbon steel, in accordance with NEN-EN-ISO 1461.
    - Thickness layer 45 to 55 µm.
  - Pre galvanized (PG).
  - Stainless steel A4 / 316L (SS).
  - Stainless steel A2 / 304 (SS304).
  - Plain oil finished (black) (POF).
- Length 3 and 6 meter.
- Slots 14x30mm, every 50mm.



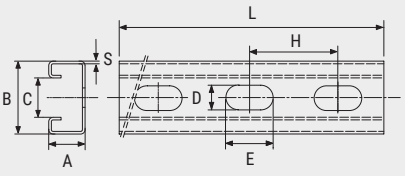

	Article number	L mm	AxB mm	C mm	S mm	DxE mm	H mm		kg/ unit
●	ES3300THDG3M	3	21x41	22	2,5	14x30	50	1	5,30
●	ES3300THDG	6	21x41	22	2,5	14x30	50	1	10,60
●	ES3300TPG3M	3	21x41	22	2,0	14x30	50	1	5,10
●	ES3300TPG	6	21x41	22	2,0	14x30	50	1	10,20
●	ES3300TSS	6	21x41	22	2,0	14x30	50	1	10,20
●	ES3300TSS304	6	21x41	22	2,0	14x30	50	1	10,20
●	ES3300TPOF	6	21x41	22	2,0	14x30	50	1	10,20

● In stock ● Limited stock ● On request

LOAD DATA

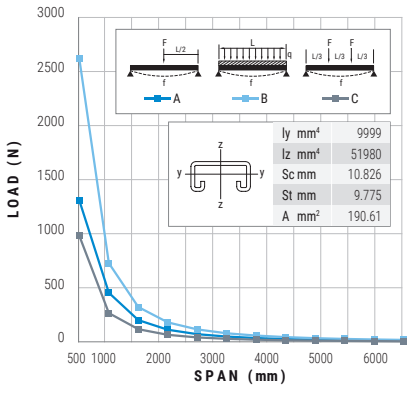

σ_{zul}=160 N/mm
f_{zul}=l/200

| + 31 10 522 33 51 | info@eurostrut.com | eurostrut.com

ES1000 | Eurostrut | Plain Strut Channel 41x41mm

SPECIFICATIONS

- For medium duty applications.
- Available in:
  - Hot dip galvanized (HDG) carbon steel, in accordance with NEN-EN-ISO 1461.
    - Thickness layer 45 to 55 µm.
  - Pre galvanized (PG).
  - Stainless steel A4 / 316L (SS).
  - Plain oil finished (black) (POF).
- Length 3 and 6 meter.



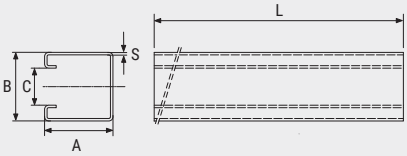

	Article number	L mm	AxBxS mm	C mm	S mm		kg/ unit
●	ES1000HDG3M	3	41x41	22	2,5	1	8,19
●	ES1000HDG	6	41x41	22	2,5	1	16,38
●	ES1000PG	6	41x41	22	2,5	1	15,78
●	ES1000SS	6	41x41	22	2,5	1	15,78
●	ES1000POF	6	41x41	22	2,5	1	15,78

● In stock ● Limited stock ● On request

LOAD DATA

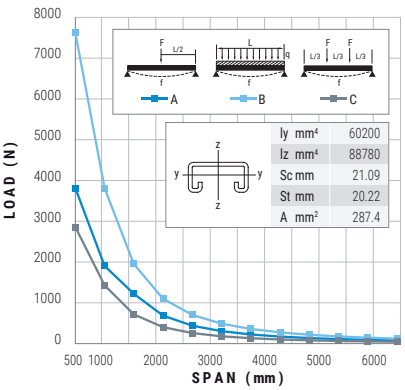

σ_{zul}=160 N/mm
f_{zul}=l/200

ES1000T | Eurostrut | Slotted Strut Channel 41x41x2,5mm

SPECIFICATIONS

- For medium duty applications.
- Available in:
  - Hot dip galvanized (HDG) carbon steel, in accordance with NEN-EN-ISO 1461.
    - Thickness layer 45 to 55 µm.
  - Pre galvanized (PG).
  - Stainless steel A4 / 316L (SS).
  - Stainless steel A2 / 304 (SS304).
  - Plain oil finished (black) (POF).
- Length 3 and 6 meter.
- Slots 14x30mm, every 50mm.



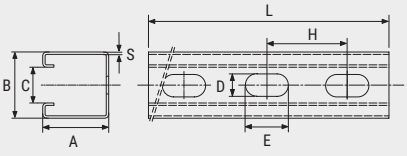

	Article number	L mm	AxB mm	C mm	S mm	DxE mm	H mm		kg/ unit
●	ES1000THDG3M	3	41x41	22	2,5	14x30	50	1	7,80
●	ES1000THDG	6	41x41	22	2,5	14x30	50	1	15,60
●	ES1000TPG3M	3	41x41	22	2,5	14x30	50	1	7,65
●	ES1000TPG	6	41x41	22	2,5	14x30	50	1	15,30
●	ES1000TSS3M	6	41x41	22	2,5	14x30	50	1	7,65
●	ES1000TSS	6	41x41	22	2,5	14x30	50	1	15,30
●	ES1000TSS304	6	41x41	22	2,5	14x30	50	1	15,30
●	ES1000TPOF	6	41x41	22	2,5	14x30	50	1	15,30

● In stock ● Limited stock ● On request

LOAD DATA

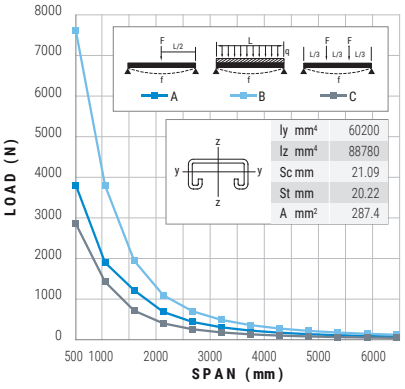

σ_{zul}=160 N/mm
f_{zul}=l/200

ES5500T | Eurostrut | Slotted Strut Channel 62x41mm

SPECIFICATIONS

- For heavy duty applications.
- Available in:
  - Hot dip galvanized (HDG) carbon steel, in accordance with NEN-EN-ISO 1461.
    - Thickness layer 45 to 55 µm.
  - Pre galvanized (PG).
- Length 6 meter.
- Slots 14x27mm, every 50mm.



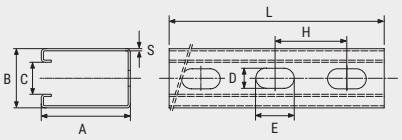

	Article number	L mm	AxB mm	C mm	S mm	DxE mm	H mm		kg/ unit
●	ES5500THDG	6	62x41	22	2,5	14x30	50	1	22,40
●	ES5500TPG	6	62x41	22	2,5	14x30	50	1	22,00

● In stock ● Limited stock ● On request

LOAD DATA

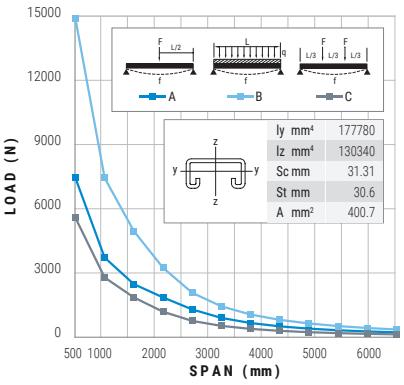

σ_{zul}=160 N/mm
f_{zul}=l/200

ES5000T | Eurostrut | Slotted Strut Channel 82x41mm

SPECIFICATIONS

- For heavy duty applications.
- Available in:
  - Hot dip galvanized (HDG) carbon steel, in accordance with NEN-EN-ISO 1461.
    - Thickness layer 45 to 55 µm.
  - Pre galvanized (PG).
- Length 6 meter.
- Slots 14x27mm, every 50mm.



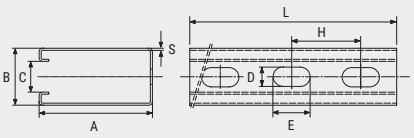

	Article number	L mm	AxB mm	C mm	S mm	DxE mm	H mm		kg/ unit
●	ES5000THDG	6	82x41	22	2,5	14x30	50	1	
●	ES5000TPG	6	82x41	22	2,5	14x30	50	1	

● In stock ● Limited stock ● On request

| + 31 10 522 33 51 | info@eurostrut.com | **eurostrut.com**

ES3301 | Eurostrut | Plain Strut Channel 2x(21x41mm)

SPECIFICATIONS

- For medium duty applications.
- Spot welded seam.
- Available in:
  - Hot dip galvanized (HDG) carbon steel, in accordance with NEN-EN-ISO 1461.
    - Thickness layer 45 to 55 µm.
- Length 6 meter.



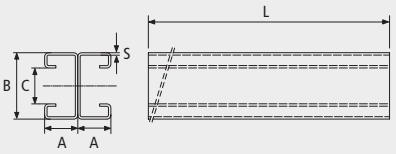

	Article number	L mm	AxBxS mm	C mm	S mm	H mm		kg/ unit
●	ES3301HDG	6	21x41x2,5	22	2,5	50	1	

● In stock ● Limited stock ● On request

ES3301T | Eurostrut | Slotted Strut Channel 2x(21x41mm)

SPECIFICATIONS

- For medium duty applications.
- Spot welded seam.
- Available in:
  - Hot dip galvanized (HDG) carbon steel, in accordance with NEN-EN-ISO 1461.
    - Thickness layer 45 to 55 µm.
  - Pre galvanized (PG).
  - Stainless steel A4 / 316L (SS).
  - Stainless steel A2 / 304 (SS304).
- Length 6 meter.
- Slots 11x25mm, every 50mm.



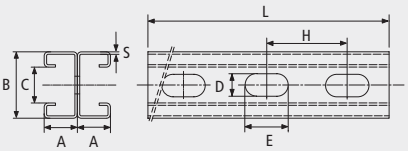

	Article number	L mm	AxB mm	C mm	S mm	DxE mm	H mm		kg/ unit
●	ES3301THDG	6	21x41	22	2,5	14x30	50	1	21,20
●	ES3301TPG	6	21x41	22	2,5	14x30	50	1	20,40
●	ES3301TSS	6	21x41	22	2,5	14x30	50	1	20,40
●	ES3301TSS304	6	21x41	22	2,5	14x30	50	1	20,40

● In stock ● Limited stock ● On request

LOAD DATA

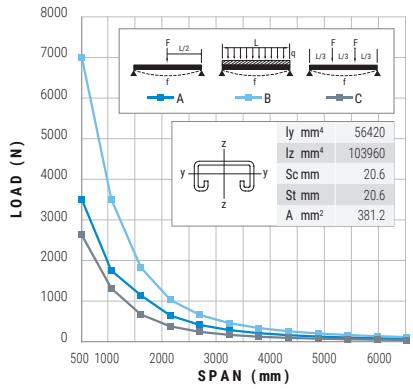

σ_{zul}=160 N/mm
f_{zul}=l/200

ES1001 | Eurostrut | Plain Strut Channel 2x(41x41mm)

SPECIFICATIONS

- For heavy duty applications.
- Spot welded seam.
- Available in:
  - Hot dip galvanized (HDG) carbon steel, in accordance with NEN-EN-ISO 1461.
    - Thickness layer 45 to 55 µm.
  - Pre galvanized (PG).
  - Stainless steel A4 / 316L (SS).
- Length 6 meter.



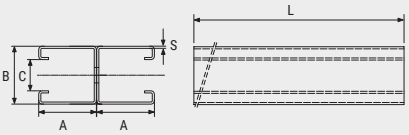

	Article number	L mm	AxB mm	C mm	S mm	H mm		kg/ unit
●	ES1001HDG	6	41x41	22	2,5	50	1	
●	ES1001PG	6	41x41	22	2,5	50	1	
●	ES1001SS	6	41x41	2	2,5	50	1	

● In stock ● Limited stock ● On request

ES1001T | Eurostrut | Slotted Strut Channel 2x(41x41mm)

SPECIFICATIONS

- For heavy duty applications.
- Spot welded seam.
- Available in:
  - Hot dip galvanized (HDG) carbon steel, in accordance with NEN-EN-ISO 1461.
    - Thickness layer 45 to 55 µm.
  - Pre galvanized (PG).
  - Stainless steel A4 / 316L (SS).
  - Stainless steel A2 / 304 (SS304).
- Length 3 and 6 meter.
- Slots 12,8x25mm, every 50mm.



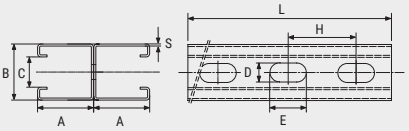

	Article number	L mm	AxB mm	C mm	S mm	DxE mm	H mm		kg/ unit
●	ES1001THDG3M	3	41x41	22	2,5	14x30	50	1	15,80
●	ES1001THDG	6	41x41	22	2,5	14x30	50	1	31,60
●	ES1001TPG	6	41x41	22	2,5	14x30	50	1	31,20
●	ES1001TSS	6	41x41	22	2,5	14x30	50	1	31,20
●	ES1001TSS304	6	41x41	22	2,5	14x30	50	1	31,20

● In stock ● Limited stock ● On request

LOAD DATA

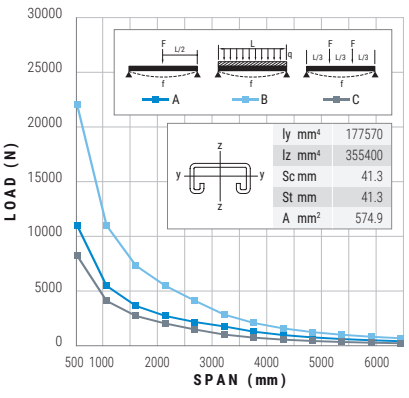

σ_{zul}=160 N/mm
f_{zul}=l/200

| + 31 10 522 33 51 | info@eurostrut.com | eurostrut.com

ES5001 | Eurostrut | Plain Strut Channel 2x(82x41mm)

SPECIFICATIONS

- For heavy duty applications.
- Spot welded seam.
- Available in:
  - Hot dip galvanized (HDG) carbon steel, in accordance with NEN-EN-ISO 1461.
    - Thickness layer 45 to 55 µm.
- Length 6 meter.



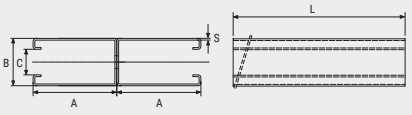

	Article number	L mm	AxB mm	C mm	S mm	H mm		kg/ unit
●	ES5001HDG	6	82x41	22	2,5	50	1	

● In stock ● Limited stock ● On request

ES5001T | Eurostrut | Slotted Strut Channel 2x(82x41mm)

SPECIFICATIONS

- For heavy duty applications.
- Spot welded seam.
- Available in:
  - Hot dip galvanized (HDG) carbon steel, in accordance with NEN-EN-ISO 1461.
    - Thickness layer 45 to 55 µm.
  - Pre galvanized (PG).
- Length 6 meter.
- Slots 12,8x25mm, every 50mm.



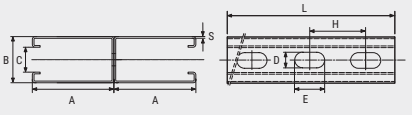

	Article number	L mm	AxB mm	C mm	S mm	DxE mm	H mm		kg/ unit
●	ES5001THDG	6	82x41	22	2,5	14x30	50	1	
●	ES5001TPG	6	82x41	22	2,5	14x30	50	1	

● In stock ● Limited stock ● On request

ES5501T | Eurostrut | Slotted Strut Channel 2x(62x41mm)

SPECIFICATIONS

- For heavy duty applications.
- Spot welded seam.
- Available in:
  - Hot dip galvanized (HDG) carbon steel, in accordance with NEN-EN-ISO 1461.
    - Thickness layer 45 to 55 µm.
  - Pre galvanized (PG).
- Length 6 meter.
- Slots 14x27mm, every 50mm.



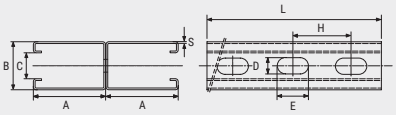

	Article number	L mm	AxB mm	C mm	S mm	DxE mm	H mm		kg/ unit
●	ES5501THDG	6	62x41	22	2,5	14x30	50	1	44,80
●	ES5501TPG	6	62x41	22	2,5	14x30	50	1	44,00

● In stock ● Limited stock ● On request

LOAD DATA

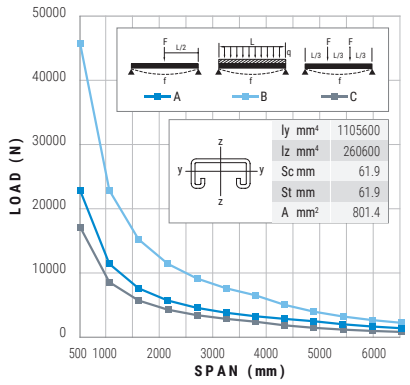

σ_{zul}=160 N/mm
f_{zul}=l/200

ES1001-B | Eurostrut | Strut Channel 2x(41x41mm) side/side

SPECIFICATIONS

- For medium to heavy duty applications.
- Spot welded seam.
- Available in:
  - Hot dip galvanized (HDG) carbon steel, in accordance with NEN-EN-ISO 1461.
    - Thickness layer 45 to 55 µm.
- Length 6 meter.

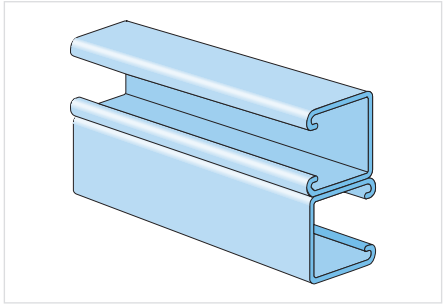

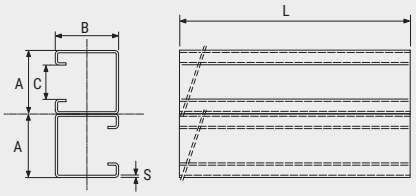

	Article number	L mm	AxB mm	C mm	S mm		kg/ unit
●	ES1001-BHDG	6	41x41	22	2,5	1	31,20

● In stock ● Limited stock ● On request

ES1001-C | Eurostrut | Strut Channel 2x(41x41mm) back/side

SPECIFICATIONS

- For medium to heavy duty applications.
- Spot welded seam.
- Available in:
  - Hot dip galvanized (HDG) carbon steel, in accordance with NEN-EN-ISO 1461.
    - Thickness layer 45 to 55 µm.
- Length 6 meter.

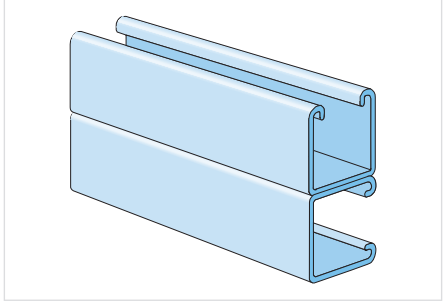

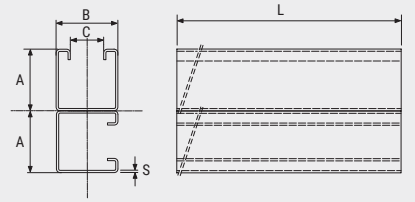

	Article number	L mm	AxB mm	C mm	S mm		kg/ unit
●	ES1001-CHDG	6	41x41	22	2,5	1	31,20

● In stock ● Limited stock ● On request

| + 31 10 522 33 51 | info@eurostrut.com | eurostrut.com

ES1001CSW | Eurostrut | Plain Strut Channel 2x(41x41mm)

SPECIFICATIONS

- For heavy duty applications.
- Continue welded seam.
- Available in:
  - Hot dip galvanized (HDG) carbon steel, in accordance with NEN-EN-ISO 1461.
    - Thickness layer 45 to 55 µm.
  - Pre galvanized (PG).
  - Stainless steel A4 / 316L (SS).
- Length 6 meter.



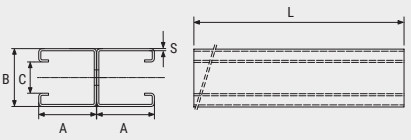

	Article number	L mm	AxB mm	C mm	S mm	H mm		kg/ unit
●	ES1001CSWHDG	6	41x41	22	2,5	50	1	

● In stock ● Limited stock ● On request

ES1001TCSW | Eurostrut | Slotted Strut Channel 2x(41x41mm)

SPECIFICATIONS

- For heavy duty applications.
- Continue welded seam.
- Available in:
  - Hot dip galvanized (HDG) carbon steel, in accordance with NEN-EN-ISO 1461.
    - Thickness layer 45 to 55 µm.
- Length 6 meter.
- Slots 12,8x25mm, every 50mm.



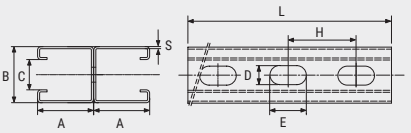

	Article number	L mm	AxB mm	C mm	S mm	DxE mm	H mm		kg/ unit
●	ES1001TCSWHDG	6	41x41	22	2,5	14x30	50	1	

● In stock ● Limited stock ● On request

ES1003-1 | Eurostrut | Strut Channel 41x41mm with flat plate welded on back

SPECIFICATIONS

- For medium duty applications.
- Spot welded seam.
- Available in:
  - Hot dip galvanized (HDG) carbon steel, in accordance with NEN-EN-ISO 1461.
    - Thickness layer 45 to 55 µm.
- Length 3 meter.

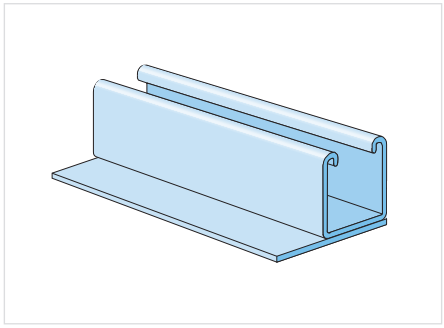

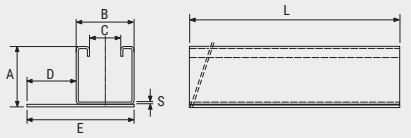

	Article number	L mm	AxB mm	C mm	S mm	D mm	E mm		kg/ unit
●	ES1003-1HDG	3	44x41	22	2,5	30	70	1	13,50

● In stock ● Limited stock ● On request

Stay up to date!

Follow **@eurostrut** on social media and sign in to our newsletter:
www.eurostrut.com/en/newsletter



ES3006/3007/3008/3013/3016 | Eurostrut | Strut Channel Nut Plain

SPECIFICATIONS

- Available in:
  - Hot dip galvanized ISO (HDG).
  - Electro zinc galvanized (EG).
  - Stainless steel A4 / 316L (SS).
- Size M6 to M16.
- Serrated nuts to suit strut channels.
- Fits on to 41mm strut channels.

	Article number	M	H mm	Nm		kg/ unit
●	ES3006HDG	M6	6	3,5	100	0,03
●	ES3007HDG	M8	6	8,4	100	0,03
●	ES3008HDG	M10	8	17	100	0,04
●	ES3013HDG	M12	9	29	100	0,04
●	ES3016HDG	M16	10	71	100	0,05
●	ES3006EG	M6	6	3,5	100	0,03
●	ES3007EG	M8	6	8,4	100	0,03
●	ES3008EG	M10	8	17	100	0,04
●	ES3013EG	M12	9	29	100	0,04
●	ES3016EG	M16	10	71	100	0,05
●	ES3006SS	M6	6	3,5	100	0,03
●	ES3007SS	M8	6	8,4	100	0,03
●	ES3008SS	M10	8	17	100	0,04
●	ES3013SS	M12	9	29	100	0,03

● In stock ● Limited stock ● On request



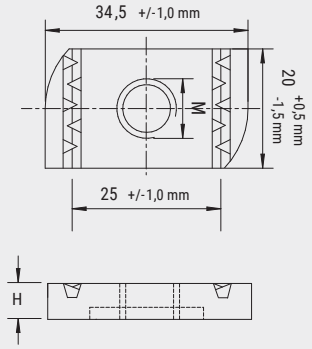

ES4006/4007/4008/4010 | Eurostrut | Strut Channel Nut Plain with Short Spring

SPECIFICATIONS

- Available in:
  - Hot dip galvanized ISO (HDG).
  - Electro zinc galvanized (EG).
  - Stainless steel A4 / 316L (SS).
- Size M6 to M12.
- Serrated nuts to suit strut channels.
- Fits on to 41mm strut channels.

	Article number	M	H mm	Nm		kg/ unit
●	ES4006 HDG	M6	6	3,5	100	0,03
●	ES4007 HDG	M8	6	8,4	100	0,03
●	ES4008 HDG	M10	8	17	100	0,04
●	ES4010 HDG	M12	8	29	100	0,04
●	ES4006 EG	M6	6	3,5	100	0,03
●	ES4007 EG	M8	6	8,4	100	0,03
●	ES4008 EG	M10	8	17	100	0,04
●	ES4010 EG	M12	8	29	100	0,04
●	ES4006 SS	M6	6	3,5	100	0,03
●	ES4007 SS	M8	6	8,4	100	0,03
●	ES4008 SS	M10	8	17	100	0,04
●	ES4010 SS	M12	8	29	100	0,04

● In stock ● Limited stock ● On request



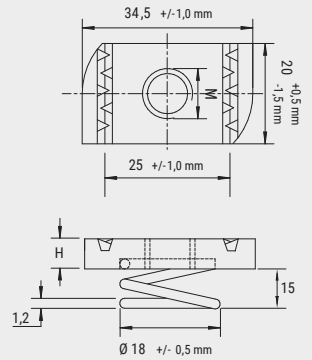

ES1006/1007/1008/1013 | Eurostrut | Strut Channel Nut Plain with Long Spring

SPECIFICATIONS

- Available in:
  - Hot dip galvanized ISO (HDG).
  - Electro zinc galvanized (EG).
  - Stainless steel A4 / 316L (SS).
- Size M6 to M12.
- Serrated nuts to suit strut channels.
- Fits on to 41mm strut channels.



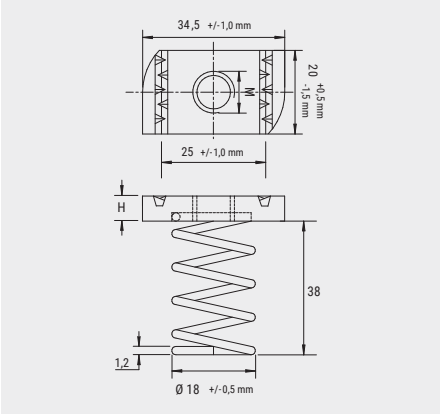

	Article number	M	H mm	Nm		kg/ unit
●	ES1006 HDG	M6	6	3,5	100	0,03
●	ES1007 HDG	M8	6	8,4	100	0,03
●	ES1008 HDG	M10	8	17	100	0,04
●	ES1013 HDG	M12	8	29	100	0,04
●	ES1006 EG	M6	6	3,5	100	0,03
●	ES1007 EG	M8	6	8,4	100	0,03
●	ES1008 EG	M10	8	17	100	0,04
●	ES1013 EG	M12	8	29	100	0,04
●	ES1006 SS	M6	6	3,5	100	0,03
●	ES1007 SS	M8	6	8,4	100	0,03
●	ES1008 SS	M10	8	17	100	0,04
●	ES1013 SS	M12	8	29	100	0,04

● In stock ● Limited stock ● On request

ES5006/5007/5008/5013 | Eurostrut | Strut Channel Nut Plain with Plastic Fixation

SPECIFICATIONS

- Available in:
  - Hot dip galvanized ISO (HDG).
  - Electro zinc galvanized (EG).
  - Stainless steel A4 / 316L (SS).
- Size M6 to M12.
- Serrated nuts to suit strut channels.
- Fits on to 41mm strut channels.
- Simple and fast mounting with one hand.
- Holds after rotation in the rail.
- Ideal for vertically-installed channel.
- Remains easy to move after mounting.
- No jamming of the spring in perforated rails.



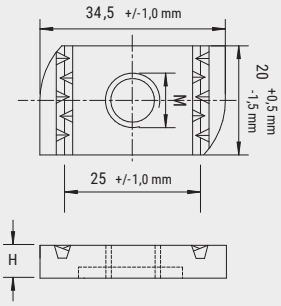

	Article number	M	H mm	Nm		kg/ unit
●	ES5006 HDG	M6	6	3,5	100	0,03
●	ES5007 HDG	M8	6	8,4	100	0,03
●	ES5008 HDG	M10	8	17	100	0,04
●	ES5013 HDG	M12	9	29	100	0,04
●	ES5006 EG	M6	6	3,5	100	0,03
●	ES5007 EG	M8	6	8,4	100	0,03
●	ES5008 EG	M10	8	17	100	0,04
●	ES5013 EG	M12	9	29	100	0,04
●	ES5006 SS	M6	6	3,5	100	0,03
●	ES5007 SS	M8	6	8,4	100	0,03
●	ES5008 SS	M10	8	17	100	0,04
●	ES5013 SS	M12	9	29	100	0,04

● In stock ● Limited stock ● On request

Application

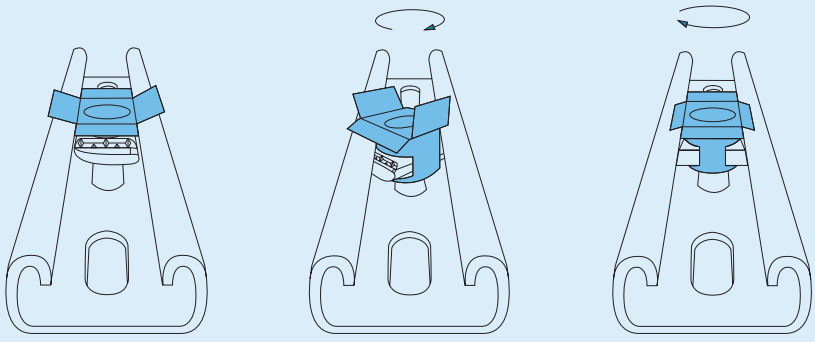

ESSN | Eurostrut | Strut Nut

SPECIFICATIONS

- Available in:
  - Electro zinc plated (EG).
  - Stainless steel A4 / 316L (SS).
- Pre mounted with nut and large washer.
- With stud M8, M10 and M12.
- Channel nuts are serrated.
- Fits on to all strut channels.



	Article number	MxL mm		kg/ unit
●	ESSN08x30EG	M8x30	50	0,08
●	ESSN08x40EG	M8x40	50	0,11
●	ESSN08x50EG	M8x50	50	0,14
●	ESSN08x60EG	M8x60	50	0,16
●	ESSN10X30EG	M10x30	50	-
●	ESSN10x40EG	M10x40	50	0,12
●	ESSN10x50EG	M10x50	50	0,15
●	ESSN10x60EG	M10x60	50	0,18
●	ESSN10x80EG	M10x80	50	-
●	ESSN10x90EG	M10x90	50	0,27
●	ESSN10x100EG	M10x100	50	-
●	ESSN12X30EG	M12x30	50	-
●	ESSN12x40EG	M12x40	50	0,13
●	ESSN12x60EG	M12x60	50	-
●	ESSN08x40SS	M8x40	50	0,11
●	ESSN10x40SS	M10x40	50	0,12

● In stock ● Limited stock ● On request

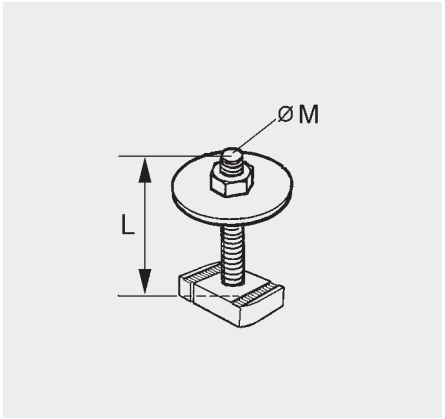

ESCS17/19 | Eurostrut | Channel Socket Drive for Strut Channel

SPECIFICATIONS

- For M10 and M12 bolts and nuts.
- Fits on all Strut channels H = 21mm and 41mm.



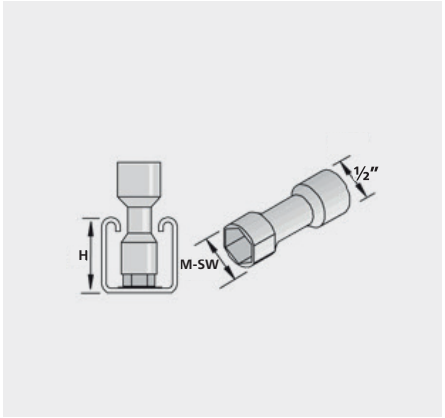

	Article number	H mm	M	SW mm
●	ESCS17AF	41	10	17
●	ESCS17AF/21	21	10	17
●	ESCS19AF	41	12	19

● In stock ● Limited stock ● On request

PTFE | Eurostrut | Teflon Strip

SPECIFICATIONS

- PTFE or Teflon is a plastic material with exceptional chemical resistance and extremely high temperature resistance (up to 260°C).
- In addition, Teflon has a very low coefficient of friction, is non-combustible and anti-adhesive.

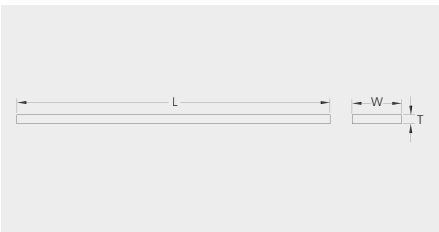

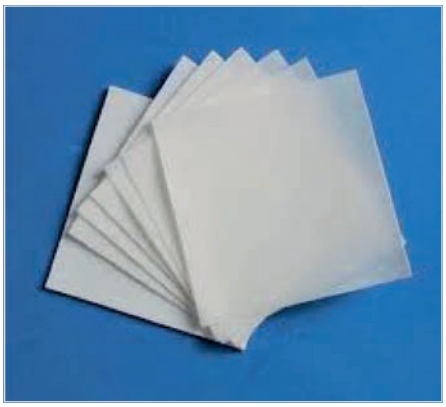

	Article number	Thickness T mm	Lenght L mm	Width W mm	Weight kg/unit	Color
●	PTFE1.0W	1,0	1200	40	0,14	White
●	PTFE2.0W	2,0	1200	40	0,27	White
●	PTFE4.0W	4,0	1200	40	0,54	White

● In stock ● Limited stock ● On request

ES4141 & ES2142 | Eurostrut | Channel End Cap for Strut Channel

SPECIFICATIONS

- Material PE (Polyethylene).
- In colours white (PW) and black (PB).



Application

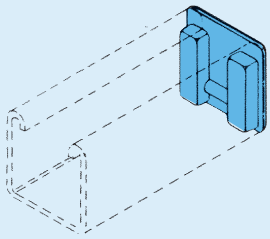

	Article number	HxB mm		kg/ 100
●	ES4141PW	41x41	100	1,00
●	ES4141PB	41x41	100	0,50
●	ES2141PW	41x21	100	1,00
●	ES2141PB	41x21	100	0,50

● In stock ● Limited stock ● On request

ES1184 | Eurostrut | Closure Strap for Strut Channel

SPECIFICATIONS

- Length 3 meter.
- Polyvinychloride in colors white (PW) and black (PB), or pre galvanized (F).



Application

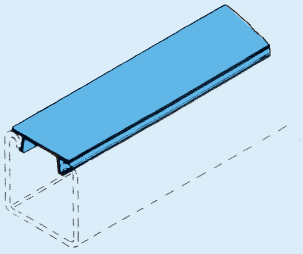

	Article number	Material		kg/ unit
●	ES1184PW	PVC White	1	0,23
●	ES1184PB	PVC Black	1	0,23
●	ES1184F	Metal	1	1,00

● In stock ● Limited stock ● On request

ESZS | W+S | Aerosol Can Zinc Spray

SPECIFICATIONS

- Zinc spray 80/81.
- Zinc spray with a particularly high zinc content (more than 90% in dry film) for exceptionally active and durable protection of steel and metal corrosion.
- Optically adapted to hot-dip galvanizing.
- For many industrial maintenance and repair.
- Beautify and protect at the same time.
- This zinc spray combines protection by pure metal pigments with the shiny appearance of a bare metal surface.
- To restore a damaged galvanized surfaces.

	Article number	Content ml		kg/ unit
●	ESZS400	400	1	0,55

● In stock ● Limited stock ● On request



ESZP | W+S | Tin Zinc Paint (Zinc Compound)

SPECIFICATIONS

- Zinc paint (zinc compound) 80/81.
- Shines as galvanized material.
- It is an anti-rust coating on the metal.
- Repair paint for galvanized parts.
- With a zinc content of more than 90% in the pigment.
- For many industrial maintenance and repair.
- To restore a damaged galvanized surfaces.

	Article number	Content ml		kg/ unit
●	ESZP250	250	1	0,60
●	ESZP500	500	1	1,15
●	ESZP1000	1000	1	2,15

● In stock ● Limited stock ● On request



335980 | Eurostrut | Rubber Strap for Strut Channel

SPECIFICATIONS

- EPDM insulation profile to prevent contact between support and ventilation duct.
- Suitable for strut.
- Can be used with threaded rods up to M10.
- Material: EPDM-SBR rubber.
- Temperature: -50 to 110 °C.



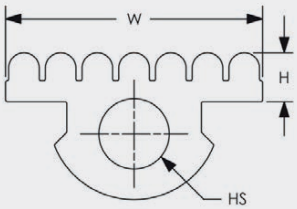

	Article number	L m	H mm	W mm	HS mm
●	335980	20	8	42	11

● In stock ● Limited stock ● On request

ES1377 | Eurostrut | External Splice Plate for Strut Channels

SPECIFICATIONS

- For bolts M12.
- Available in:
  - Hot dip galvanized (HDG).
  - Stainless steel A4 / 316L (SS).
- To create metal frames with strut channels.



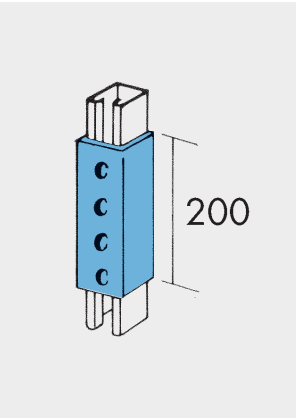

	Article number	HxB mm		kg/ unit
●	ES1377HDG	41x41	10	1,11
●	ES1377SS	41x41	10	1,11

● In stock ● Limited stock ● On request

SCBF | Eurostrut | Banded Fitting One Hole for Strut Channel

SPECIFICATIONS

- For bolts M8, M10 and M12.
- Available in:
  - Hot dip galvanized (HDG).
  - Stainless steel A4 / 316L (SS).
- Fits on all strut channels.



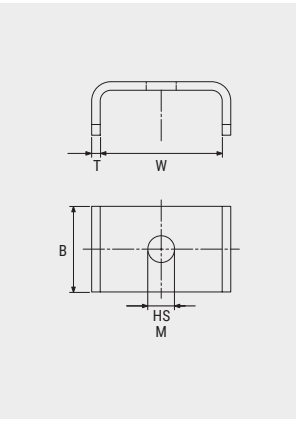

	Article number	HS mm	M	W mm	T mm	B mm		kg/ unit
●	SCBF8HDG	10	M8	42	3	30	100	0,05
●	SCBF10HDG	12	M10	42	3	30	100	0,05
●	SCBF12HDG	14	M12	42	3	30	100	0,05
●	SCBF8SS	10	M8	42	3	30	100	0,05
●	SCBF10SS	12	M10	42	3	30	100	0,05
●	SCBF12SS	14	M12	42	3	30	100	0,05

● In stock ● Limited stock ● On request

ES1062/1062A/1063/1064 | Eurostrut | Flat Strut Bracket 1 hole square washer

SPECIFICATIONS

- Thickness 5mm.
- Available in:
  - Hot dip galvanized (HDG).
  - Stainless steel A4 / 316L (SS).
- To create metal frames with strut channels.

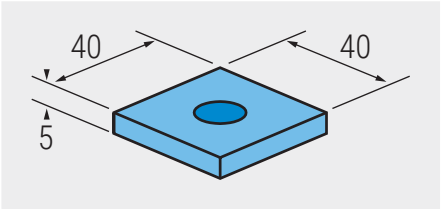

	Article number	M		kg/ unit
●	ES1062HDG	6	100	0,07
●	ES1062SS	6	100	0,07
●	ES1062AHDG	8	100	0,07
●	ES1062ASS	8	100	0,07
●	ES1063HDG	10	100	0,07
●	ES1063SS	10	100	0,07
●	ES1064HDG	12	100	0,07
●	ES1064SS	12	100	0,07

● In stock ● Limited stock ● On request

Application

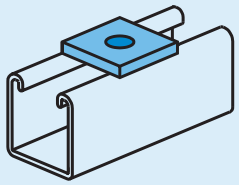

ES1065 | Eurostrut | Flat Strut bracket Straight 2 Holes

SPECIFICATIONS

- Thickness 5mm.
- Available in:
  - Hot dip galvanized (HDG).
  - Stainless steel A4 / 316L (SS).
- To create metal frames with strut channels.
- For bolts M12.

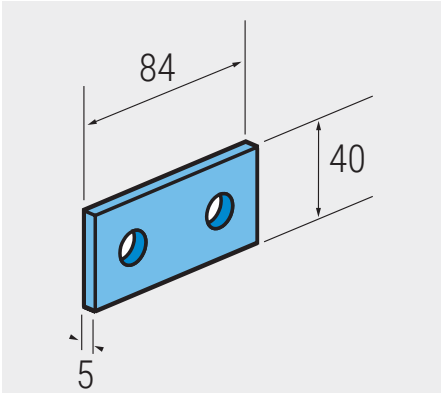

	Article number		kg/ unit
●	ES1065HDG	50	0,12
●	ES1065SS	50	0,12

● In stock ● Limited stock ● On request

Application

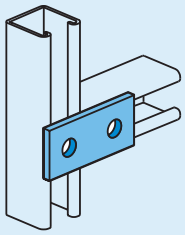

ES1066 | Eurostrut | Flat Strut Bracket Straight 3 Holes

SPECIFICATIONS

- Thickness 5mm.
- Available in:
  - Hot dip galvanized (HDG).
  - Stainless steel A4 / 316L (SS).
- To create metal frames with strut channels.
- For bolts M12.

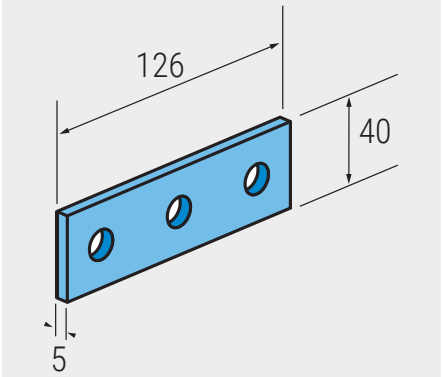

	Article number		kg/ unit
●	ES1066HDG	25	0,24
●	ES1066SS	25	0,24

● In stock ● Limited stock ● On request

Application

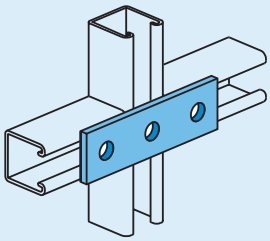

ES1067 | Eurostrut | Flat Strut Bracket Straight 4 Holes

SPECIFICATIONS

- Thickness 5mm.
- Available in:
  - Hot dip galvanized (HDG).
  - Stainless steel A4 / 316L (SS).
- To create metal frames with strut channels.
- For bolts M12.

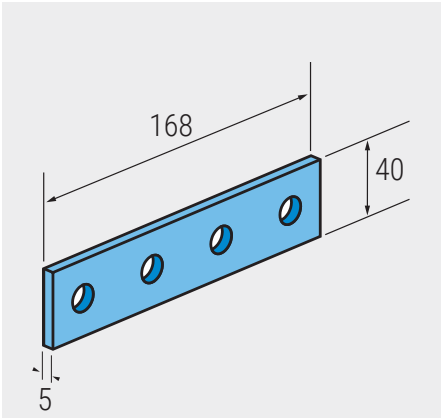

	Article number		kg/ unit
●	ES1067HDG	25	0,28
●	ES1067SS	25	0,28

● In stock ● Limited stock ● On request

Application

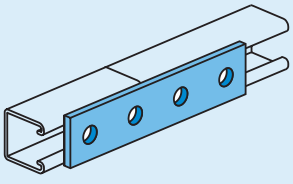

ES1941 | Eurostrut | Flat Strut Bracket Straight 5 Holes

SPECIFICATIONS

- Thickness 5mm.
- Available in:
  - Hot dip galvanized (HDG).
  - Stainless steel A4 / 316L (SS).
- To create metal frames with strut channels.
- For bolts M12.

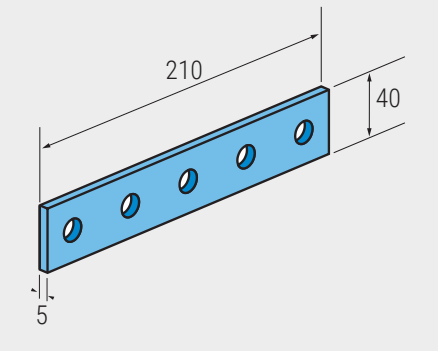

Application

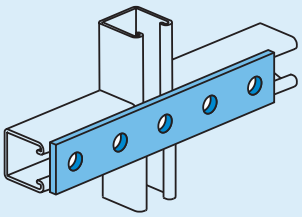

	Article number		kg/ unit
●	ES1941HDG	25	0,36
●	ES1941SS	25	0,36

● In stock ● Limited stock ● On request

ES2322 | Eurostrut | Flat Strut Bracket Straight with 1 Rounded End 3 Holes

SPECIFICATIONS

- Thickness 5mm.
- Available in:
  - Hot dip galvanized (HDG).
- To create metal frames with strut channels.
- For bolts M12.

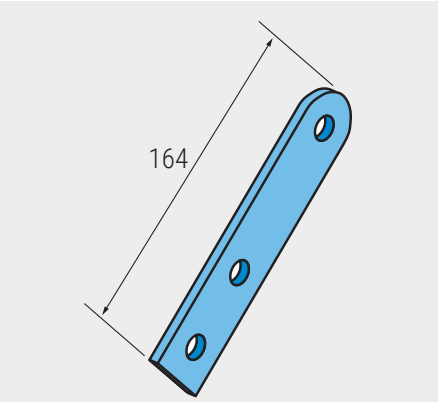

Application

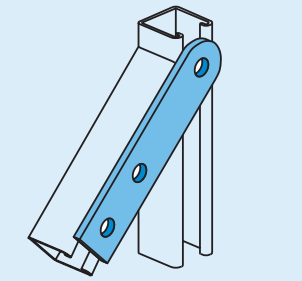

	Article number		kg/ unit
●	ES2322HDG	25	0,28

● In stock ● Limited stock ● On request

ES1036 | Eurostrut | Flat Angle Strut Bracket 3 Holes

SPECIFICATIONS

- Thickness 5mm.
- Available in:
  - Hot dip galvanized (HDG).
  - Stainless steel A4 / 316L (SS).
- To create metal frames with strut channels.
- For bolts M12.

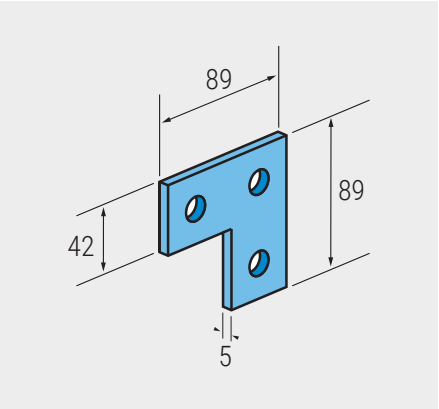

Application

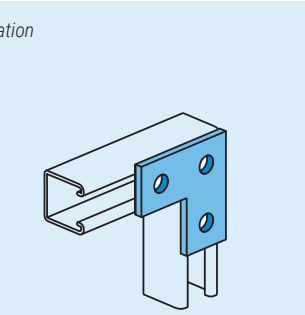

	Article number		kg/ unit
●	ES1036HDG	25	0,21
●	ES1036SS	25	0,21

● In stock ● Limited stock ● On request

ES1031 | Eurostrut | Flat Tee Strut Bracket 4 Holes

SPECIFICATIONS

- Thickness 5mm.
- Available in:
  - Hot dip galvanized (HDG).
  - Stainless steel A4 / 316L (SS).
- To create metal frames with strut channels.
- For bolts M12.

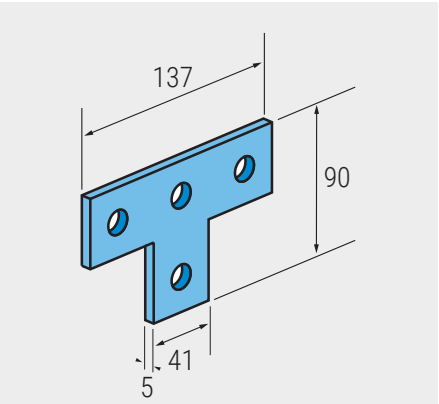

Application

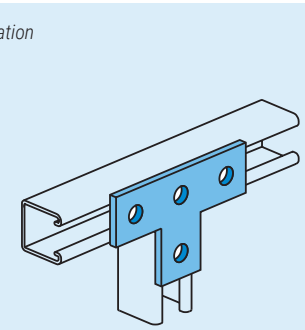

	Article number		kg/ unit
●	ES1031HDG	25	0,30
●	ES1031SS	25	0,30

● In stock ● Limited stock ● On request

ES1358 | Eurostrut | Flat Wide Strut Tee Bracket 4 Holes

SPECIFICATIONS

- Thickness 5mm.
- Available in:
  - Hot dip galvanized (HDG).
  - Stainless steel A4 / 316L (SS).
- To create metal frames with strut channels.
- For bolts M12.

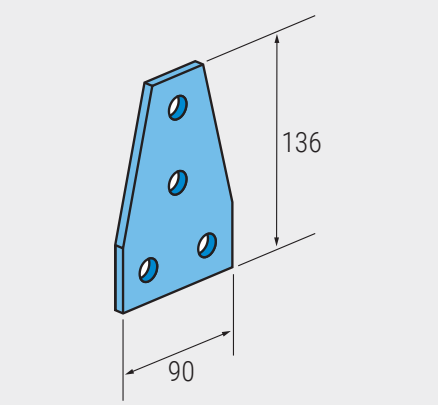

Application

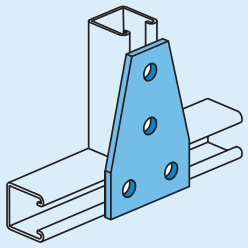

	Article number		kg/ unit
●	ES1358HDG	10	0,42
●	ES1358SS	10	0,42

● In stock ● Limited stock ● On request

ES1028 | Eurostrut | Flat Cross Strut Bracket 5 Holes

SPECIFICATIONS

- Thickness 5mm.
- Available in:
  - Hot dip galvanized (HDG).
  - Stainless steel A4 / 316L (SS).
- To create metal frames with strut channels.
- For bolts M12.

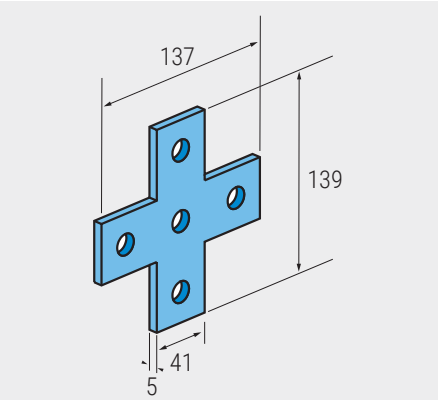

Application

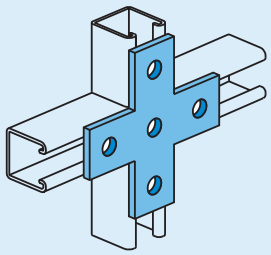

	Article number		kg/ unit
●	ES1028HDG	25	0,42
●	ES1028SS	25	0,42

● In stock ● Limited stock ● On request

ES1580 | Eurostrut | Flat Cross Strut Bracket 4 Holes

SPECIFICATIONS

- Thickness 5mm.
- Available in:
  - Hot dip galvanized (HDG).
  - Stainless steel A4 / 316L (SS).
- To create metal frames with strut channels.
- For bolts M12.

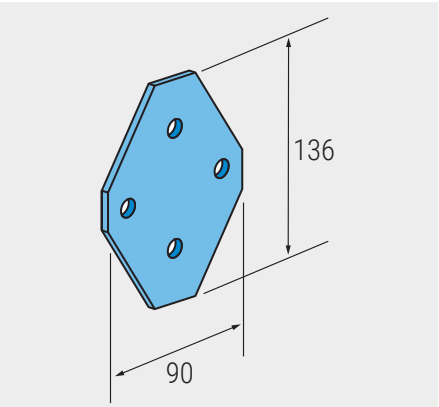

Application

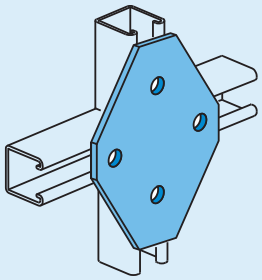

	Article number		kg/ unit
●	ES1580HDG	10	0,80
●	ES1580SS	10	0,80

● In stock ● Limited stock ● On request

ES1962 | Eurostrut | Flat Tri-Direction Strut Bracket 4 Holes

SPECIFICATIONS

- Thickness 5mm.
- Available in:
  - Hot dip galvanized (HDG).
  - Stainless steel A4 / 316L (SS).
- To create metal frames with strut channels.
- For bolts M12.

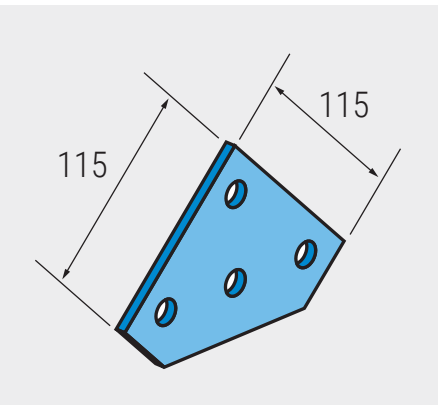

Application

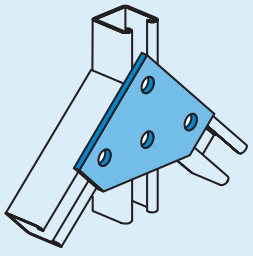

	Article number		kg/ unit
●	ES1962HDG	10	0,40
●	ES1962SS	10	0,40

● In stock ● Limited stock ● On request

ES1026 | Eurostrut | 90° Angle Strut Bracket 2 Holes

SPECIFICATIONS

- Thickness 5mm.
- Available in:
  - Hot dip galvanized (HDG).
  - Stainless steel A4 / 316L (SS).
- To create metal frames with strut channels.
- For bolts M12.

	Article number		kg/ unit
●	ES1026HDG	50	0,13
●	ES1026SS	50	0,13

● In stock ● Limited stock ● On request

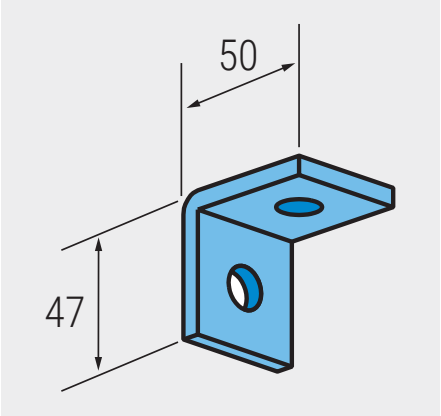

Application

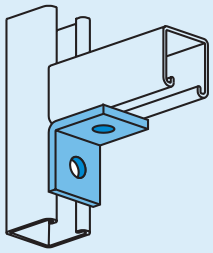

ES1068 | Eurostrut | 90° Angle Strut Bracket 2 Holes

SPECIFICATIONS

- Thickness 5mm.
- Available in:
  - Hot dip galvanized (HDG).
  - Stainless steel A4 / 316L (SS).
- To create metal frames with strut channels.
- For bolts M12.

	Article number		kg/ unit
●	ES1068HDG	50	0,15
●	ES1068SS	50	0,15

● In stock ● Limited stock ● On request

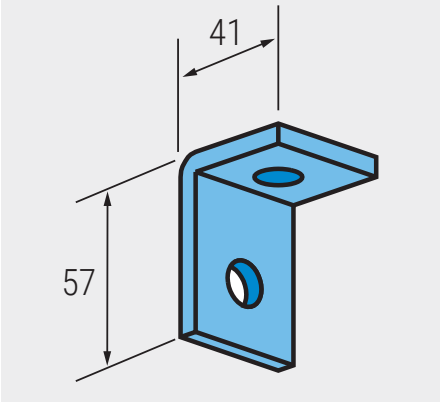

Application

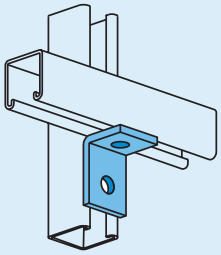

ES1326 | Eurostrut | 90° Angle Strut Bracket 3 Holes

SPECIFICATIONS

- Thickness 5mm.
- Available in:
  - Hot dip galvanized (HDG).
  - Stainless steel A4 / 316L (SS).
- To create metal frames with strut channels.
- For bolts M12.

	Article number		kg/ unit
●	ES1326HDG	25	0,24
●	ES1326SS	25	0,24

● In stock ● Limited stock ● On request

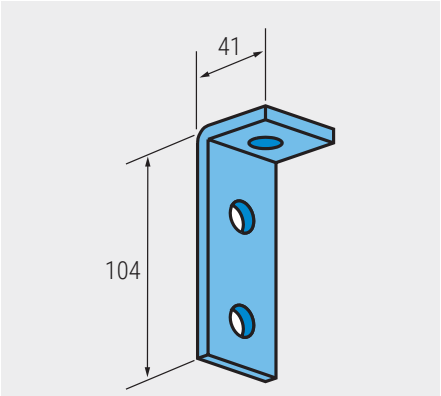

Application

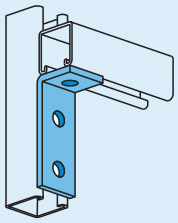

ES1346 | Eurostrut | 90° Angle Strut Bracket 3 Holes

SPECIFICATIONS

- Thickness 5mm.
- Available in:
  - Hot dip galvanized (HDG).
  - Stainless steel A4 / 316L (SS).
- To create metal frames with strut channels.
- For bolts M12.

	Article number		kg/ unit
●	ES1346HDG	25	0,24
●	ES1346SS	25	0,24

● In stock ● Limited stock ● On request

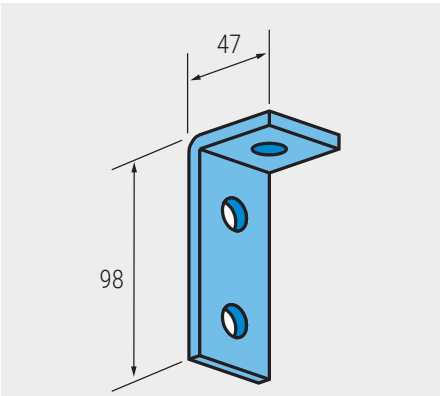

Application

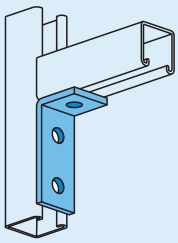

ES1458 | Eurostrut | 90° Angle Strut Bracket 3 Holes

SPECIFICATIONS

- Thickness 5mm.
- Available in:
  - Hot dip galvanized (HDG).
  - Stainless steel A4 / 316L (SS).
- To create metal frames with strut channels.
- For bolts M12.

	Article number		kg/ unit
●	ES1458HDG	25	0,24
●	ES1458SS	25	0,24

● In stock ● Limited stock ● On request

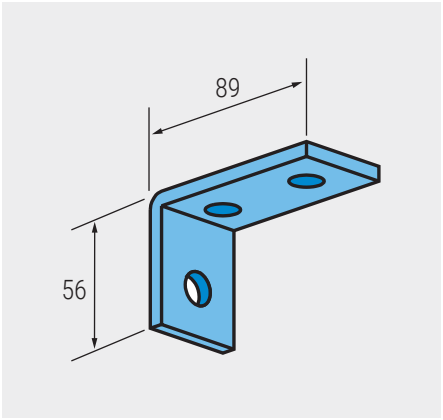

Application

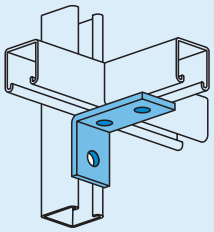

ES1325 | Eurostrut | 90° Angle Strut Bracket 4 Holes

SPECIFICATIONS

- Thickness 5mm.
- Available in:
  - Hot dip galvanized (HDG).
  - Stainless steel A4 / 316L (SS).
- To create metal frames with strut channels.
- For bolts M12.

	Article number		kg/ unit
●	ES1325HDG	25	0,29
●	ES1325SS	25	0,29

● In stock ● Limited stock ● On request

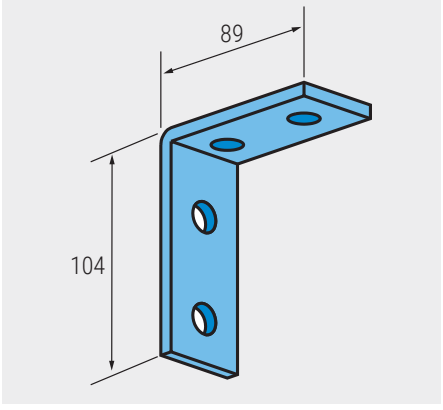

Application

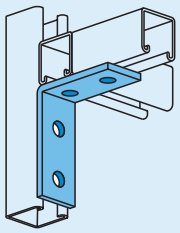

ES1278 | Eurostrut | 90° Angle Strut Bracket 4 Holes

SPECIFICATIONS

- Thickness 5mm.
- Available in:
  - Hot dip galvanized (HDG).
  - Stainless steel A4 / 316L (SS).
- To create metal frames with strut channels.
- For bolts M12.

	Article number		kg/ unit
●	ES1278HDG	25	0,29
●	ES1278SS	25	0,29

● In stock ● Limited stock ● On request

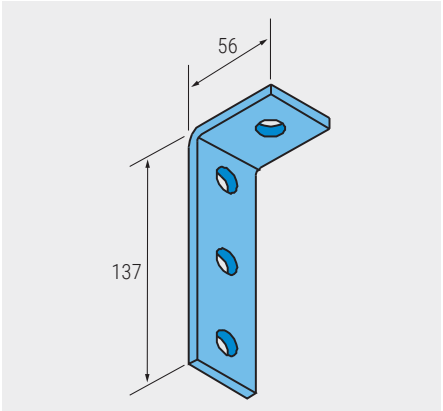

Application

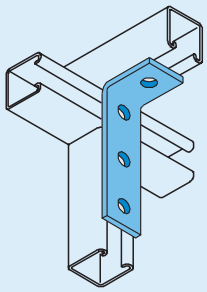

ES2484 | Eurostrut | 90° Angle Strut Bracket 4 Holes

SPECIFICATIONS

- Thickness 5mm.
- Available in:
  - Hot dip galvanized (HDG).
  - Stainless steel A4 / 316L (SS).
- To create metal frames with strut channels.
- For bolts M12.

	Article number		kg/ unit
●	ES2484HDG	25	0,29
●	ES2484SS	25	0,29

● In stock ● Limited stock ● On request

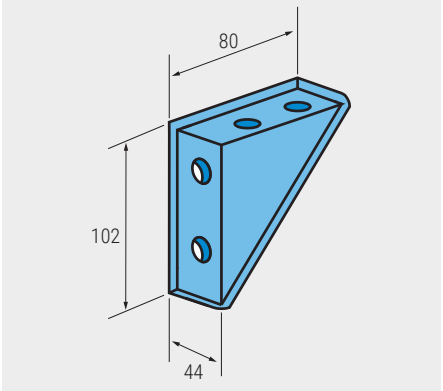

Application

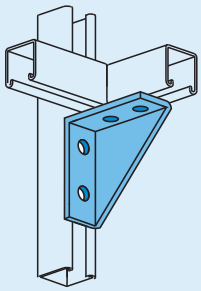

ES1359 | Eurostrut | 90° Wide Tee Angle Strut Bracket 4 Holes

SPECIFICATIONS

- Thickness 5mm.
- Available in:
  - Hot dip galvanized (HDG).
  - Stainless steel A4 / 316L (SS).
- To create metal frames with strut channels.
- For bolts M12.

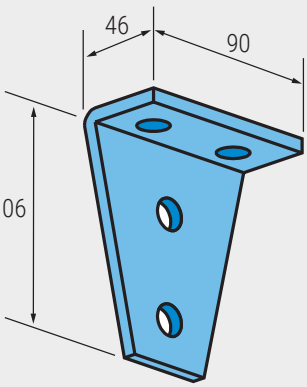

Application

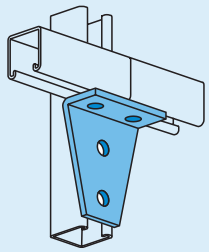

	Article number		kg/ unit
●	ES1359HDG	10	0,45
●	ES1359SS	10	0,45

● In stock ● Limited stock ● On request

ES1357 | Eurostrut | 90° Wide Tee Angle Strut Bracket 3 Holes

SPECIFICATIONS

- Thickness 5mm.
- Available in:
  - Hot dip galvanized (HDG).
  - Stainless steel A4 / 316L (SS).
- To create metal frames with strut channels.
- For bolts M12.

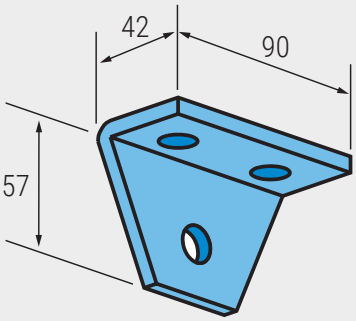

Application

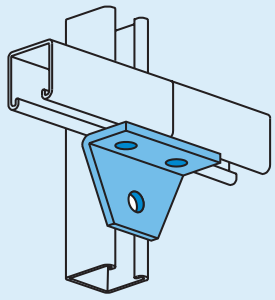

	Article number		kg/ unit
●	ES1357HDG	10	0,30
●	ES1357SS	10	0,30

● In stock ● Limited stock ● On request

ES1727 | Eurostrut | 90° Wide Tee Angle Strut Bracket 5 Holes

SPECIFICATIONS

- Thickness 5mm.
- Available in:
  - Hot dip galvanized (HDG).
  - Stainless steel A4 / 316L (SS).
- To create metal frames with strut channels.
- For bolts M12.

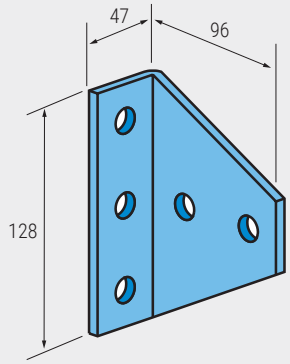

Application

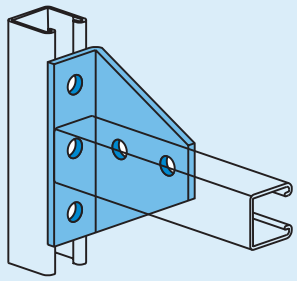

	Article number		kg/ unit
●	ES1727HDG	10	0,45
●	ES1727SS	10	0,45

● In stock ● Limited stock ● On request

ES1186 | Eurostrut | 45° Angle Strut Bracket 2 Holes

SPECIFICATIONS

- Thickness 5mm.
- Available in:
  - Hot dip galvanized (HDG).
  - Stainless steel A4 / 316L (SS).
- To create metal frames with strut channels.
- For bolts M12.

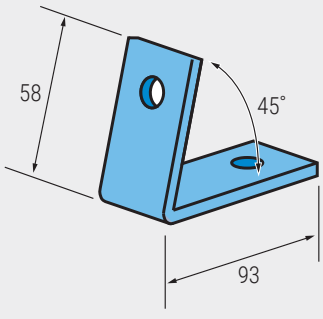

Application

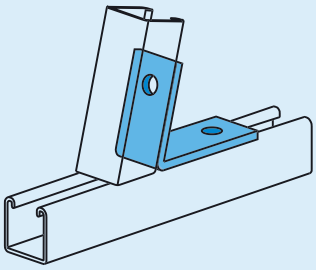

	Article number	A°		kg/ unit
●	ES1186HDG	45	25	0,32
●	ES1186SS	45	25	0,32

● In stock ● Limited stock ● On request

ES2108 | Eurostrut | 60° Angle Strut Bracket 2 Holes

SPECIFICATIONS

- Thickness 5mm.
- Available in:
  - Hot dip galvanized (HDG).
  - Stainless steel A4 / 316L (SS).
- To create metal frames with strut channels.
- For bolts M12.

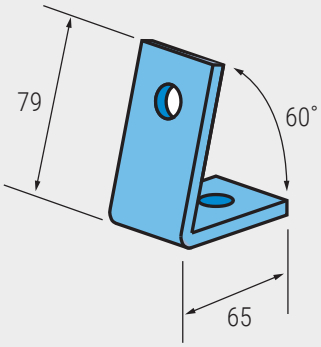

Application

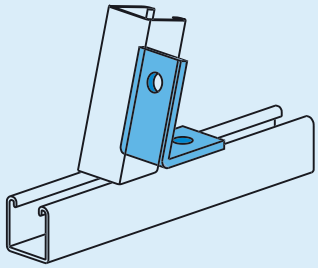

	Article number	A°		kg/ unit
●	ES2108HDG	75	25	0,24
●	ES2108SS	75	25	0,24

● In stock ● Limited stock ● On request

ES2106 | Eurostrut | 75° Angle Strut Bracket 2 Holes

SPECIFICATIONS

- Thickness 5mm.
- Available in:
  - Hot dip galvanized (HDG).
  - Stainless steel A4 / 316L (SS).
- To create metal frames with strut channels.
- For bolts M12.

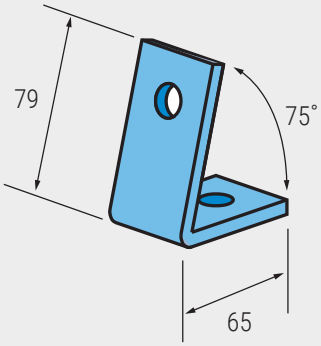

Application

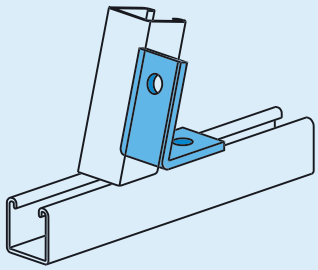

	Article number	A°		kg/ unit
●	ES2106HDG	75	25	0,24
●	ES2106SS	75	25	0,24

● In stock ● Limited stock ● On request

ES1546 | Eurostrut | 45° Angle Strut Bracket 2 Holes

SPECIFICATIONS

- Thickness 5mm.
- Available in:
  - Hot dip galvanized (HDG).
  - Stainless steel A4 / 316L (SS).
- To create metal frames with strut channels.
- For bolts M12.

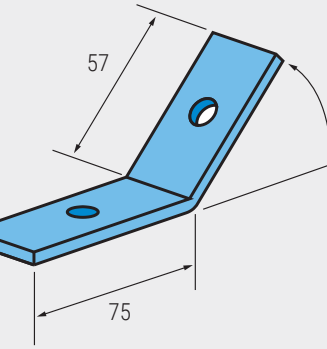

Application

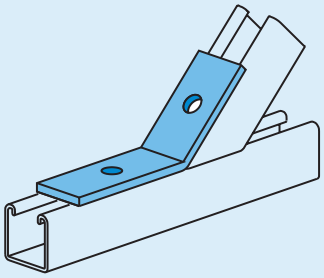

	Article number	A°		kg/ unit
●	ES1546HDG	45	25	0,26
●	ES1546SS	45	25	0,26

● In stock ● Limited stock ● On request

ES2097 | Eurostrut | 60° Angle Strut Bracket 2 Holes

SPECIFICATIONS

- Thickness 5mm.
- Available in:
  - Hot dip galvanized (HDG).
  - Stainless steel A4 / 316L (SS).
- To create metal frames with strut channels.
- For bolts M12.

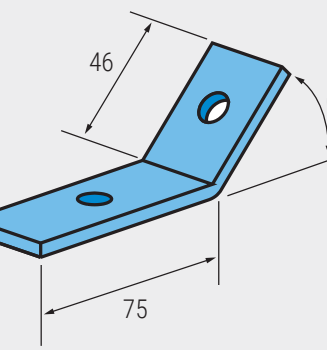

Application

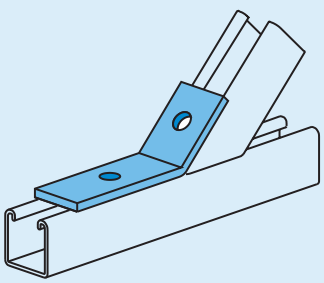

	Article number	A°		kg/ unit
●	ES2097HDG	60	25	0,18
●	ES20974SS	60	25	0,18

● In stock ● Limited stock ● On request

ES2101 | Eurostrut | 30° Angle Strut Bracket 2 Holes

SPECIFICATIONS

- Thickness 5mm.
- Available in:
  - Hot dip galvanized (HDG).
  - Stainless steel A4 / 316L (SS).
- To create metal frames with strut channels.
- For bolts M12.

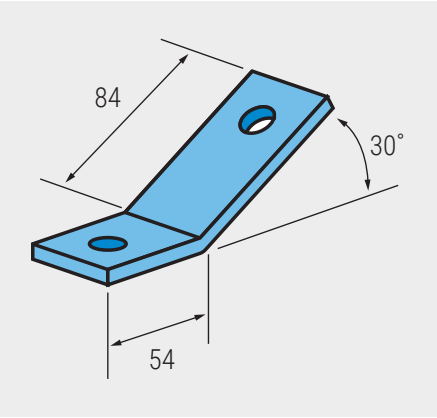

Application

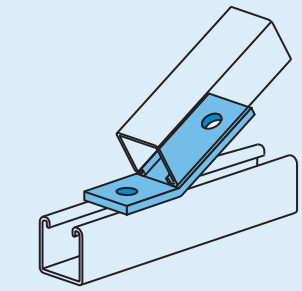

	Article number	A°		kg/ unit
●	ES2101HDG	30	25	0,26
●	ES2101SS	30	25	0,26

● In stock ● Limited stock ● On request

ES1074 | Eurostrut | 45° Angle Strut Bracket 4 Holes

SPECIFICATIONS

- Thickness 5mm.
- Available in:
  - Hot dip galvanized (HDG).
  - Stainless steel A4 / 316L (SS).
- To create metal frames with strut channels.
- For bolts M12.

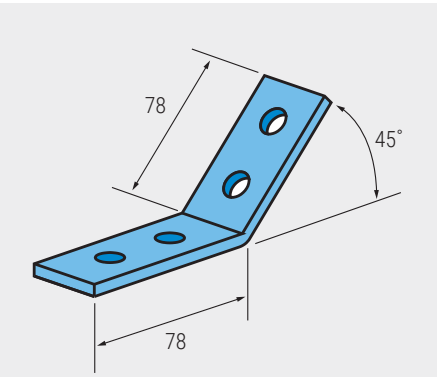

Application

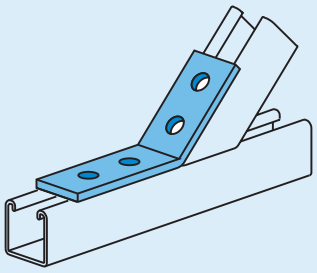

	Article number	A°		kg/ unit
●	ES1074HDG	45	25	0,29
●	ES1074SS	45	25	0,29

● In stock ● Limited stock ● On request

ES1354 | Eurostrut | Vertical Hinged Angle Bracket 4 Holes

SPECIFICATIONS

- Thickness 5mm.
- Available in:
  - Electro zinc plated (EZP).
- To create metal frames with strut channels.
- For bolts M12.

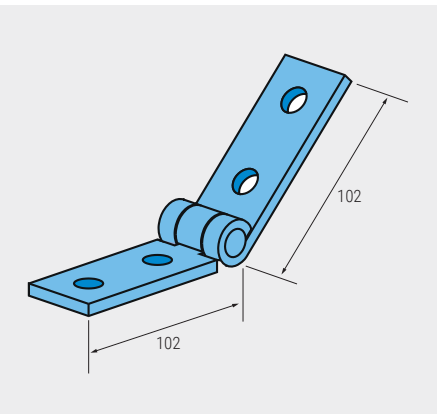

Application

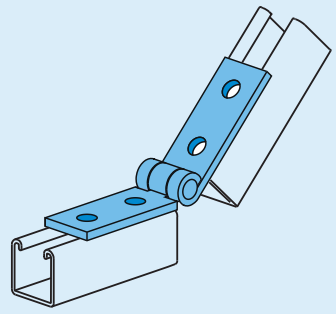

	Article number		kg/ unit
●	ES1354EZP	10	0,25

● In stock ● Limited stock ● On request

ES1047 | Eurostrut | Offset Tee Strut Bracket for 41x41 5 Holes

SPECIFICATIONS

- Thickness 5mm.
- Available in:
  - Hot dip galvanized (HDG).
  - Stainless steel A4 / 316L (SS).
- To create metal frames with strut channels.
- For bolts M12.

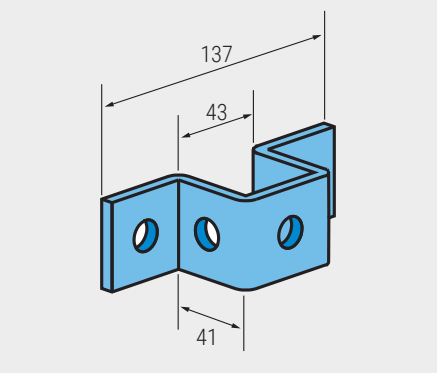

Application

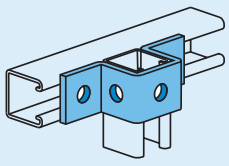

	Article number		kg/ unit
●	ES1047HDG	25	0,34
●	ES1047SS	25	0,34

● In stock ● Limited stock ● On request

ES4047 | Eurostrut | Offset Tee Strut Bracket for 21x41 5 Holes

SPECIFICATIONS

- Thickness 5mm.
- Available in:
  - Hot dip galvanized (HDG).
  - Stainless steel A4 / 316L (SS).
- To create metal frames with strut channels.
- For bolts M12.

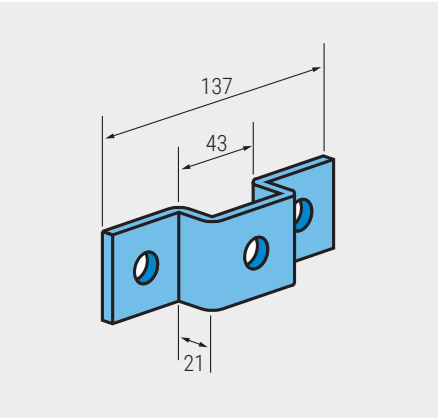

Application

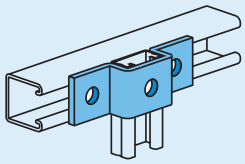

	Article number		kg/ unit
●	ES4047HDG	25	0,29
●	ES4047SS	25	0,29

● In stock ● Limited stock ● On request

ES1043 | Eurostrut | Double Offset Tee Strut Bracket for 41x41 5 Holes

SPECIFICATIONS

- Thickness 5mm.
- Available in:
  - Hot dip galvanized (HDG).
  - Stainless steel A4 / 316L (SS).
- To create metal frames with strut channels.
- For bolts M12.

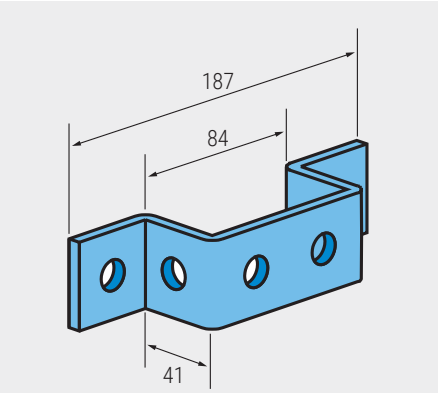

Application

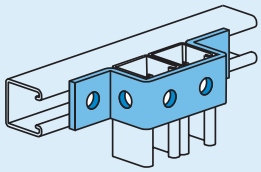

	Article number		kg/ unit
●	ES1043HDG	10	0,43
●	ES1043SS	10	0,43

● In stock ● Limited stock ● On request

ES1737 | Eurostrut | B2B Offset Tee Strut Bracket for 41x41 3 Holes

SPECIFICATIONS

- Thickness 5mm.
- Available in:
  - Hot dip galvanized (HDG).
  - Stainless steel A4 / 316L (SS).
- To create metal frames with strut channels.
- For bolts M12.

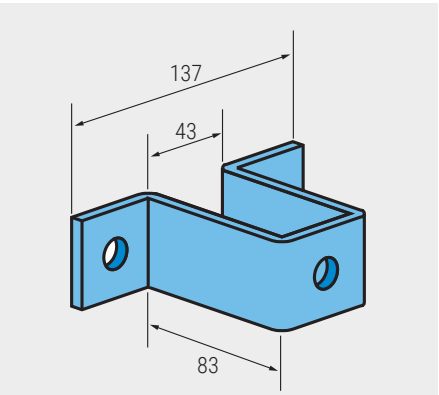

Application

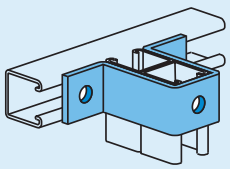

	Article number		kg/ unit
●	ES1737HDG	10	0,55
●	ES1737SS	10	0,55

● In stock ● Limited stock ● On request

ES1035 | Eurostrut | Offset Angle Strut Bracket 3 Holes Right Corner

SPECIFICATIONS

- Thickness 5mm.
- Available in:
  - Hot dip galvanized (HDG).
  - Stainless steel A4 / 316L (SS).
- To create metal frames with strut channels.
- For bolts M12.

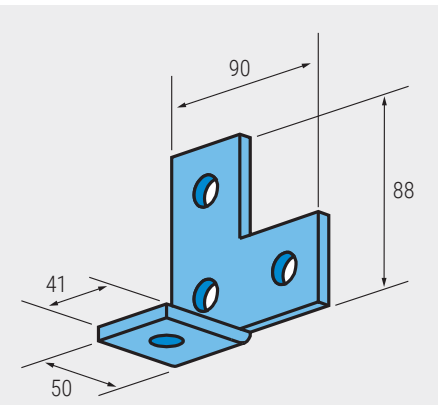

Application

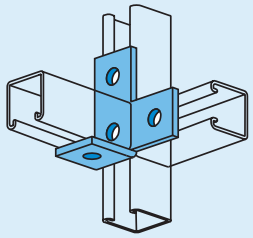

	Article number		kg/ unit
●	ES1035HDG	25	0,34
●	ES1035SS	25	0,34

● In stock ● Limited stock ● On request

ES1034 | Eurostrut | Offset Angle Strut Bracket 3 Holes Left Corner

SPECIFICATIONS

- Thickness 5mm.
- Available in:
  - Hot dip galvanized (HDG).
  - Stainless steel A4 / 316L (SS).
- To create metal frames with strut channels.
- For bolts M12.

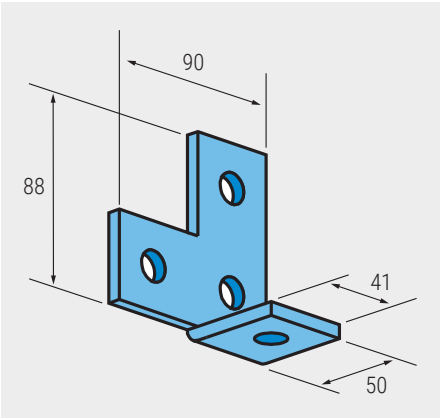

Application

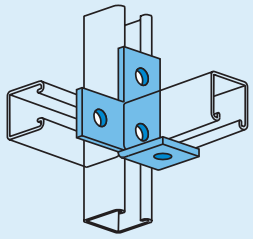

	Article number		kg/ unit
●	ES1034HDG	25	0,34
●	ES1034SS	25	0,34

● In stock ● Limited stock ● On request

ES1044 | Eurostrut | Channel Jointing Bracket 4 Holes

SPECIFICATIONS

- Thickness 5mm.
- Available in:
  - Hot dip galvanized (HDG).
  - Stainless steel A4 / 316L (SS).
- To create metal frames with strut channels.
- For bolts M12.

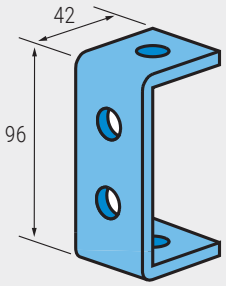

Application

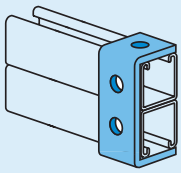

	Article number		kg/ unit
●	ES1044HDG	25	0,25
●	ES1044SS	25	0,25

● In stock ● Limited stock ● On request

ES4045 | Eurostrut | Single Cross Over Strut Bracket for 21x41 2 Holes

SPECIFICATIONS

- Thickness 5mm.
- Available in:
  - Hot dip galvanized (HDG).
  - Stainless steel A4 / 316L (SS).
- To create metal frames with strut channels.
- For bolts M12.

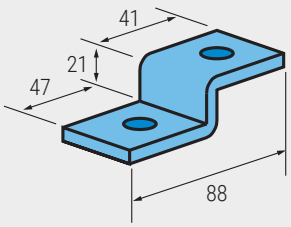

Application

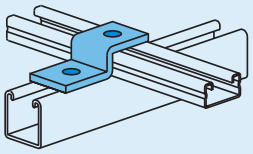

	Article number		kg/ unit
●	ES4045HDG	50	0,19
●	ES4045SS	50	0,19

● In stock ● Limited stock ● On request

ES1045 | Eurostrut | Single Cross Over Strut Bracket for 41x41 2 Holes

SPECIFICATIONS

- Thickness 5mm.
- Available in:
  - Hot dip galvanized (HDG).
  - Stainless steel A4 / 316L (SS).
- To create metal frames with strut channels.
- For bolts M12.

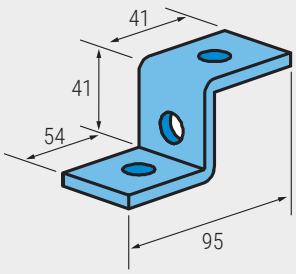

Application

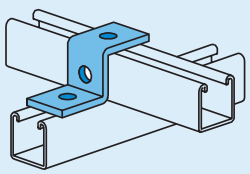

	Article number		kg/ unit
●	ES1045HDG	25	0,21
●	ES1045SS	25	0,21

● In stock ● Limited stock ● On request

| + 31 10 522 33 51 | info@eurostrut.com | eurostrut.com

ES1453 | Eurostrut | Double Cross Over Strut Bracket for 82x41 4 Holes

SPECIFICATIONS

- Thickness 5mm.
- Available in:
  - Hot dip galvanized (HDG).
  - Stainless steel A4 / 316L (SS).
- To create metal frames with strut channels.
- For bolts M12.

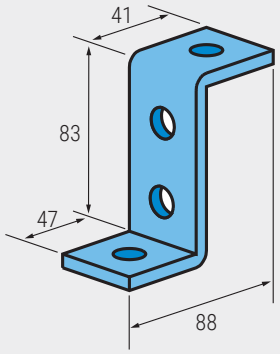

Application

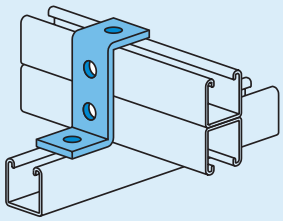

	Article number		kg/ unit
●	ES1453HDG	25	0,32
●	ES1453SS	25	0,32

● In stock ● Limited stock ● On request

ES1347 | Eurostrut | Single Cross Over Strut Bracket for 41x41 2 Holes

SPECIFICATIONS

- Thickness 5mm.
- Available in:
  - Hot dip galvanized (HDG).
  - Stainless steel A4 / 316L (SS).
- To create metal frames with strut channels.
- For bolts M12.

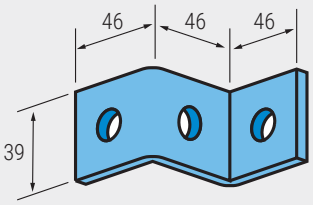

Application

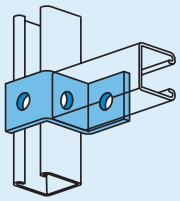

	Article number		kg/ unit
●	ES1347HDG	25	0,24
●	ES1347SS	25	0,24

● In stock ● Limited stock ● On request

ES1736 | Eurostrut | Z Shaped Fitting

SPECIFICATIONS

- Thickness 5mm.
- Available in:
  - Hot dip galvanized (HDG).
  - Stainless steel A4 / 316L (SS).
- To create metal frames with strut channels.
- For bolts M12.

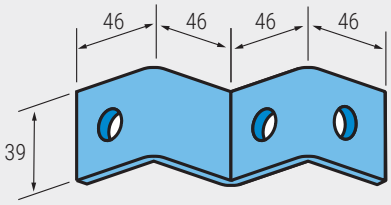

Application

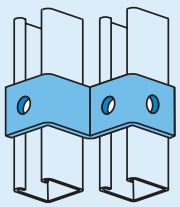

	Article number		kg/ unit
●	ES1736HDG	25	0,27
●	ES1736SS	25	0,27

● In stock ● Limited stock ● On request

ES1834 | Eurostrut | Trolley Hanger

SPECIFICATIONS

- Thickness 5mm.
- Available in:
  - Hot dip galvanized (HDG).
  - Stainless steel A4 / 316L (SS).
- To create metal frames with strut channels.
- For bolts M12.

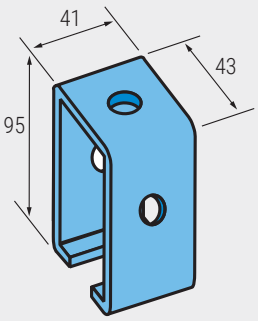

Application

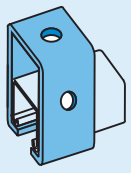

	Article number		kg/ unit
●	ES1834HDG	25	0,35
●	ES1834SS	25	0,35

● In stock ● Limited stock ● On request

ES2346 | Eurostrut | Transversal Wing Strut Bracket 8 Holes

SPECIFICATIONS

- Thickness 5mm.
- Available in:
  - Hot dip galvanized (HDG).
  - Stainless steel A4 / 316L (SS).
- To create metal frames with strut channels.
- For bolts M12.

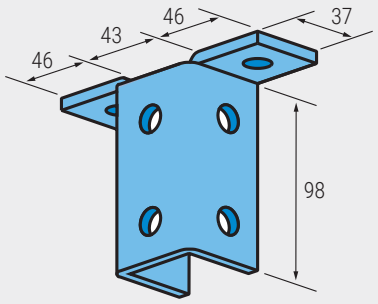

Application

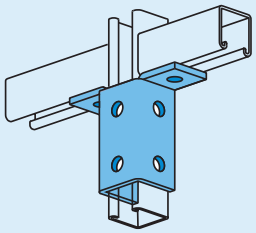

	Article number		kg/ unit
●	ES2346HDG	10	0,60
●	ES2346SS	10	0,60

● In stock ● Limited stock ● On request

ES2341R | Eurostrut | Wing Fitting Right Handed 2 Holes

SPECIFICATIONS

- Thickness 5mm.
- Available in:
  - Hot dip galvanized (HDG).
  - Stainless steel A4 / 316L (SS).
- To create metal frames with strut channels.
- For bolts M12.

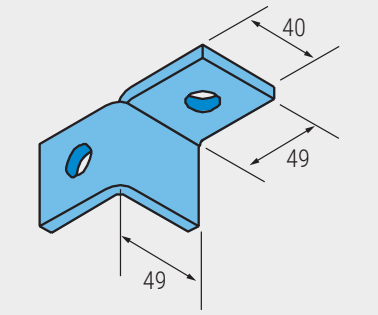

Application

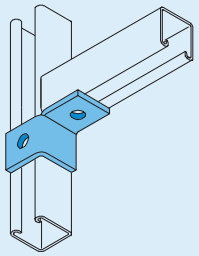

	Article number		kg/ unit
●	ES2341RHDG	25	0,21
●	ES2341RSS	25	0,21

● In stock ● Limited stock ● On request

ES2341L | Eurostrut | Wing Fitting Left Handed 2 Holes

SPECIFICATIONS

- Thickness 5mm.
- Available in:
  - Hot dip galvanized (HDG).
  - Stainless steel A4 / 316L (SS).
- To create metal frames with strut channels.
- For bolts M12.

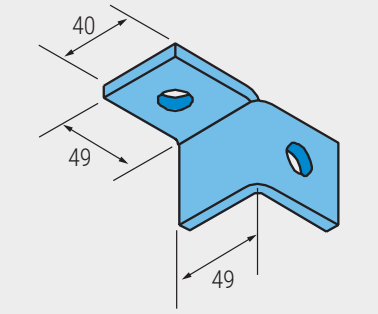

Application

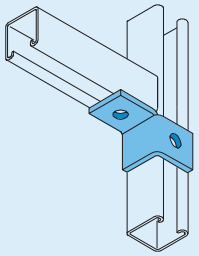

	Article number		kg/ unit
●	ES2341LHDG	25	0,21
●	ES2341LSS	25	0,21

● In stock ● Limited stock ● On request

ES2223 | Eurostrut | Wing Fitting Right-Left Handed 4 Holes

SPECIFICATIONS

- Thickness 5mm.
- Available in:
  - Hot dip galvanized (HDG).
  - Stainless steel A4 / 316L (SS).
- To create metal frames with strut channels.
- For bolts M12.

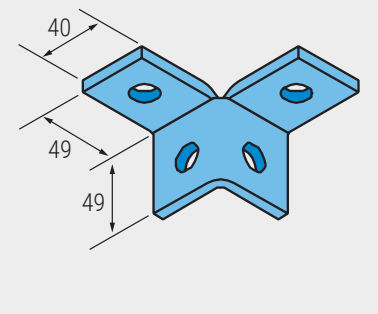

Application

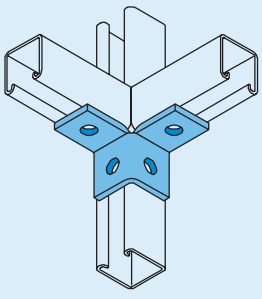

	Article number		kg/ unit
●	ES2223HDG	25	0,35
●	ES2223SS	25	0,35

● In stock ● Limited stock ● On request

ES2224 | Eurostrut | Wing Shape Fitting

SPECIFICATIONS

- Thickness 5mm.
- Available in:
  - Hot dip galvanized (HDG).
  - Stainless steel A4 / 316L (SS).
- To create metal frames with strut channels.
- For bolts M12.

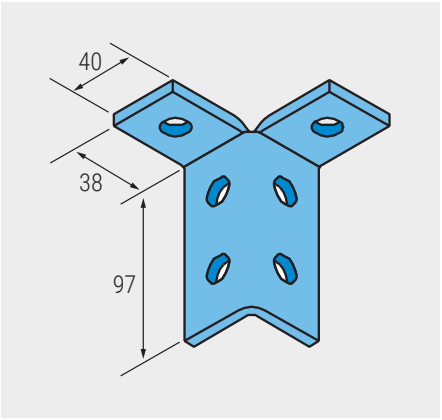

Application

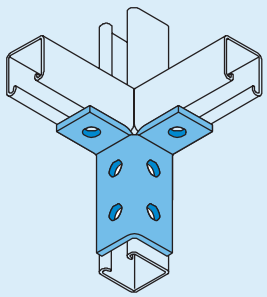

	Article number		kg/ unit
●	ES2224HDG	25	0,49
●	ES2224SS	25	0,49

● In stock ● Limited stock ● On request

ES2228 | Eurostrut | Wing Shape Fitting

SPECIFICATIONS

- Thickness 5mm.
- Available in:
  - Hot dip galvanized (HDG).
  - Stainless steel A4 / 316L (SS).
- To create metal frames with strut channels.
- For bolts M12.

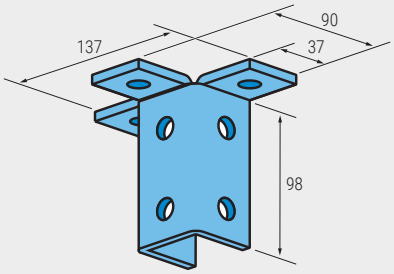

Application

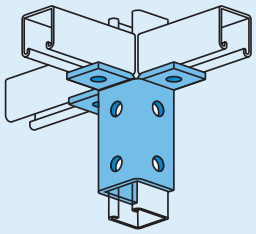

	Article number		kg/ unit
●	ES2228HDG	25	0,67
●	ES2228SS	25	0,67

● In stock ● Limited stock ● On request

ES2072-S1 | Eurostrut | Single Base Plate for 41x41 2 Holes

SPECIFICATIONS

- Thickness 5mm.
- Available in:
  - Hot dip galvanized (HDG).
  - Stainless steel A4 / 316L (SS).
- To create metal frames with strut channels.
- For bolts M12.

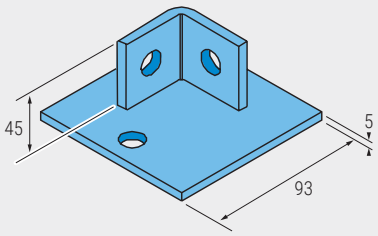

Application

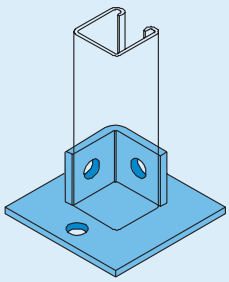

	Article number		kg/ unit
●	ES2072-S1HDG	25	0,57
●	ES2072-S1SS	25	0,57

● In stock ● Limited stock ● On request

ES2072-S2 | Eurostrut | Single Base Plate for 41x41 1 Hole

SPECIFICATIONS

- Thickness 5mm.
- Available in:
  - Hot dip galvanized (HDG).
  - Stainless steel A4 / 316L (SS).
- To create metal frames with strut channels.
- For bolts M12.

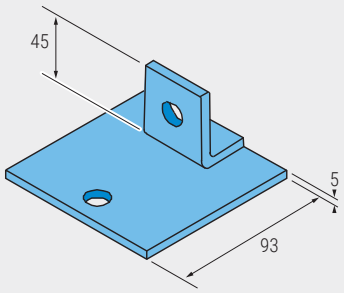

Application

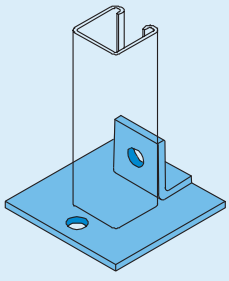

	Article number		kg/ unit
●	ES2072-S2HDG	25	0,40
●	ES2072-S2SS	25	0,40

● In stock ● Limited stock ● On request

ES2072ASQ | Eurostrut | Base Mounting Bracket for 41x41 6 Holes

SPECIFICATIONS

- Thickness 5mm.
- Available in:
  - Hot dip galvanized (HDG).
  - Stainless steel A4 / 316L (SS).
- To create metal frames with strut channels.
- For bolts M12.

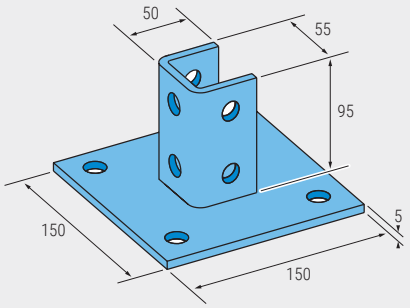

Application

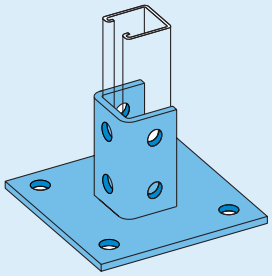

	Article number		kg/ unit
●	ES2072ASQHDG	1	1,74
●	ES2072ASQSS	1	1,74

● In stock ● Limited stock ● On request

ES2073ASQ | Eurostrut | Double Base Plate for 82x41 8 Holes

SPECIFICATIONS

- Thickness 5mm.
- Available in:
  - Hot dip galvanized (HDG).
  - Stainless steel A4 / 316L (SS).
- To create metal frames with strut channels.
- For bolts M12.

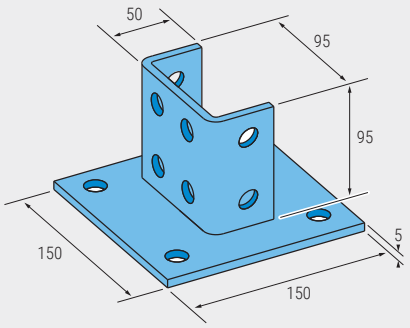

Application

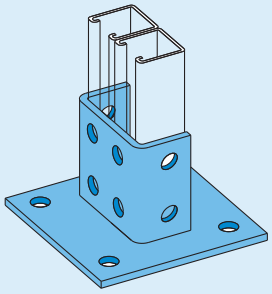

	Article number		kg/ unit
●	ES2073ASQHDG	1	1,85
●	ES2073ASQSS	1	1,85

● In stock ● Limited stock ● On request

ES2073 | Eurostrut | Double Base Plate for 82x41 4 Holes

SPECIFICATIONS

- Thickness 5mm.
- Available in:
  - Hot dip galvanized (HDG).
  - Stainless steel A4 / 316L (SS).
- To create metal frames with strut channels.
- For bolts M12.

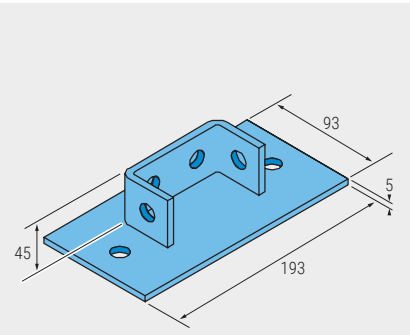

Application

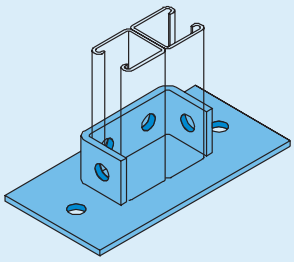

	Article number		kg/ unit
●	ES2073HDG	5	1,10
●	ES2073SS	5	1,10

● In stock ● Limited stock ● On request

ES2348-S1 | Eurostrut | Base Mounting Bracket for 41x41 4 Holes

SPECIFICATIONS

- Thickness 5mm.
- Available in:
  - Hot dip galvanized (HDG).
  - Stainless steel A4 / 316L (SS).
- To create metal frames with strut channels.
- For bolts M12.

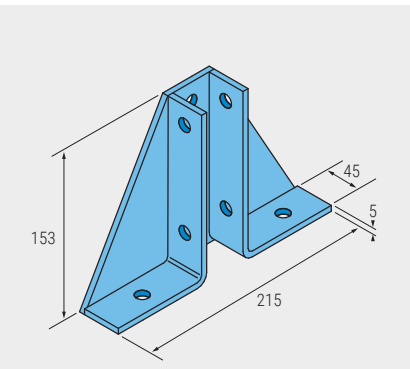

Application

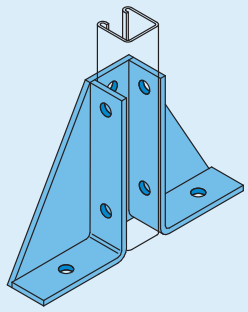

	Article number		kg/ unit
●	ES2348-S1HDG	1	1,40
●	ES2348-S1SS	1	1,40

● In stock ● Limited stock ● On request

ES2348-S2 | Eurostrut | Base Mounting Bracket for 82x41 4 Holes

SPECIFICATIONS

- Thickness 5mm.
- Available in:
  - Hot dip galvanized (HDG).
  - Stainless steel A4 / 316L (SS).
- To create metal frames with strut channels.
- For bolts M12.

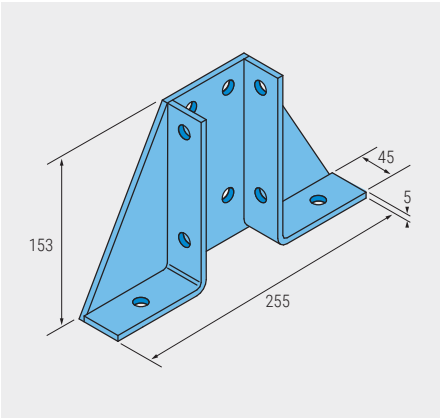

Application

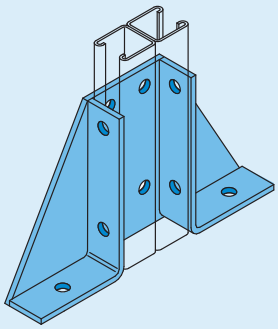

	Article number		kg/ unit
●	ES2348-S2HDG	1	1,50
●	ES2348-S2SS	1	1,50

● In stock ● Limited stock ● On request

ES1887 | Eurostrut | Base Plate

SPECIFICATIONS

- Thickness 5mm.
- Available in:
  - Hot dip galvanized (HDG).
  - Stainless steel A4 / 316L (SS).
- To create metal frames with strut channels.
- For bolts M12.

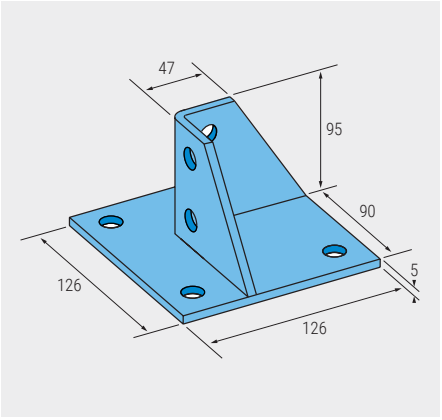

Application

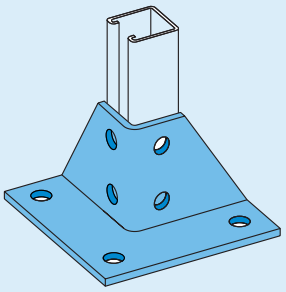

	Article number		kg/ unit
●	ES1887HDG	1	1,50
●	ES1887SS	1	1,50

● In stock ● Limited stock ● On request



Your total supplier of Cable Management Systems & Solutions

Cable Ladders | Cable Trays |
Marine Ladders | Conduit | Pipe Clamps |
Strut Mounting Systems **& more!**

Visit eurostrut.com for our complete range

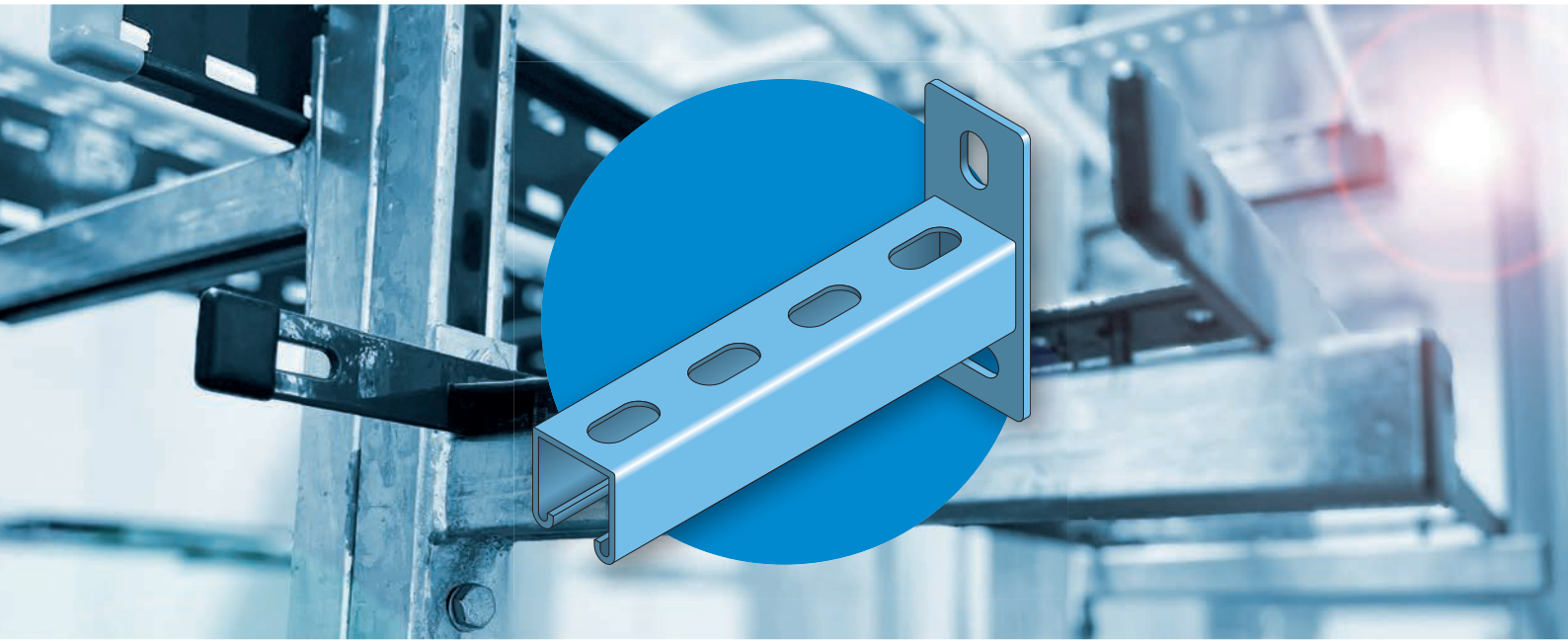

Mounting Systems
Eurostrut Support Systems



Stay up to date!

Follow **@eurostrut** on social media and sign in to our newsletter:
www.eurostrut.com/en/newsletter

General conditions

- Eurostrut Support Systems & Solutions B.V. is not liable for cable management systems that are incorrectly installed or where different parts or maintenance methods are applied.
- Although the product information shown in this catalog is accurate and reliable, Eurostrut Support Systems & Solutions B.V. can not be held responsible and liable for inaccuracies.
- The performance data are specific and may be subject to variations due to normal manufacturing tolerances.
- Eurostrut Support Systems & Solutions B.V. reserves the right to change performance information or specifications at any time without notice.

2ba

The convenience of 2ba

Eurostrut's products are listed with all associated information in 2BA's central article database. Product, price and stock information must be continuously available in order to operate efficiently. The 2BA data pool offers the solution.
2ba.nl

The main advantages of 2BA:

- Design, calculate and order more efficiently because all product and price information comes from the same source.
- Data is directly available via the leading ERP software packages or your own custom system.
- You have your own net purchase prices based on Eurostrut's agreed purchasing conditions.

Eurostrut is **ISO 9001 certified**, ensuring quality management across all processes to meet customer requirements and specifications.

By achieving **step 3** certification on the **CO_2 Performance Ladder**, Eurostrut demonstrates its commitment to environmental responsibility and fostering a healthy living environment.

ES2633T | Eurostrut | Slotted Strut Cantilever Arm 21x41x2,5mm

SPECIFICATIONS

- Easy to adjust.
- Available in:
  - Carbon steel, hot dip galvanized (HDG), in accordance with NEN-EN-ISO 1461.
  - Stainless steel A4 / 316L (SS).
  - Carbon steel, electro zinc plated (EZP).
- Lengths 150, 450 and 750mm on request.

Available surface finishes	Change HDG to	Stock
Hot dip galvanized	-	●
Stainless steel A4 / 316L	SS	●
Electro zinc plated	EZP	●



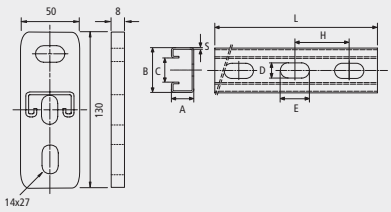

	Article number	L mm	AxBxS mm	C mm	DxE mm	H mm		kg/ unit
●	ES2633T/100HDG	100	21x41x2,5	22,3	11x27	50	1	0,53
●	ES2633T/150HDG	150	21x41x2,5	22,3	11x27	50	1	0,66
●	ES2633T/200HDG	200	21x41x2,5	22,3	11x27	50	1	0,74
●	ES2633T/300HDG	300	21x41x2,5	22,3	11x27	50	1	0,92
●	ES2633T/400HDG	400	21x41x2,5	22,3	11x27	50	1	0,99
●	ES2633T/450HDG	450	21x41x2,5	22,3	11x27	50	1	1,19
●	ES2633T/500HDG	500	21x41x2,5	22,3	11x27	50	1	1,32
●	ES2633T/600HDG	600	21x41x2,5	22,3	11x27	50	1	1,45
●	ES2633T/700HDG	700	21x41x2,5	22,3	11x27	50	1	1,58
●	ES2633T/750HDG	750	21x41x2,5	22,3	11x27	50	1	1,64
●	ES2633T/800HDG	800	21x41x2,5	22,3	11x27	50	1	1,71
●	ES2633T/900HDG	900	21x41x2,5	22,3	11x27	50	1	1,84
●	ES2633T/1000HDG	1000	21x41x2,5	22,3	11x27	50	1	1,97

● In stock ● Limited stock ● On request

σ_{zul}=160 N/mm
f_{zul}=l/200

LOAD DATA

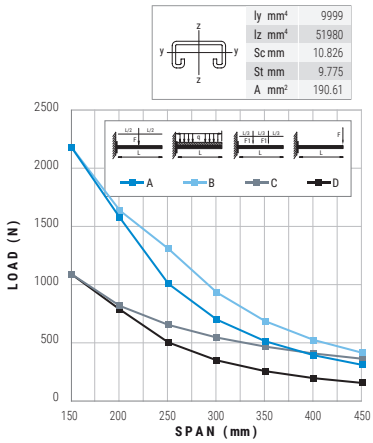

ES2663T | Eurostrut | Slotted Strut Cantilever Arm 41x41x2,5mm

SPECIFICATIONS

- Easy to adjust.
- Available in:
  - Carbon steel, hot dip galvanized (HDG), in accordance with NEN-EN-ISO 1461.
  - Stainless steel A4 / 316L (SS).
  - Carbon steel, electro zinc plated (EZP).
- Lengths 150, 450 and 750mm on request.

Available surface finishes	Change HDG to	Stock
Hot dip galvanized	-	●
Stainless steel A4 / 316L	SS	●
Electro zinc plated	EZP	●



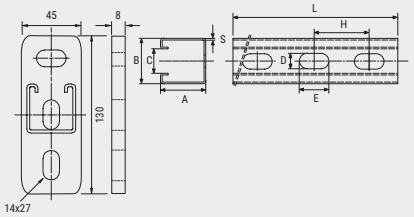

	Article number	L mm	AxBxS mm	C mm	DxE mm	H mm		kg/ unit
●	ES2663T/100HDG	100	41x41x2,5	22,3	14x27	50	1	0,71
●	ES2663T/150HDG	150	41x41x2,5	22,3	14x27	50	1	0,83
●	ES2663T/200HDG	200	41x41x2,5	22,3	14x27	50	1	0,95
●	ES2663T/300HDG	300	41x41x2,5	22,3	14x27	50	1	1,33
●	ES2663T/400HDG	400	41x41x2,5	22,3	14x27	50	1	1,45
●	ES2663T/450HDG	450	41x41x2,5	22,3	14x27	50	1	1,60
●	ES2663T/500HDG	500	41x41x2,5	22,3	14x27	50	1	1,72
●	ES2663T/600HDG	600	41x41x2,5	22,3	14x27	50	1	1,97
●	ES2663T/700HDG	700	41x41x2,5	22,3	14x27	50	1	2,22
●	ES2663T/750HDG	750	41x41x2,5	22,3	14x27	50	1	2,35
●	ES2663T/800HDG	800	41x41x2,5	22,3	14x27	50	1	2,47
●	ES2663T/900HDG	900	41x41x2,5	22,3	14x27	50	1	2,75
●	ES2663T/1000HDG	1000	41x41x2,5	22,3	14x27	50	1	2,99

● In stock ● Limited stock ● On request

σ_{zul}=160 N/mm
f_{zul}=l/200

LOAD DATA

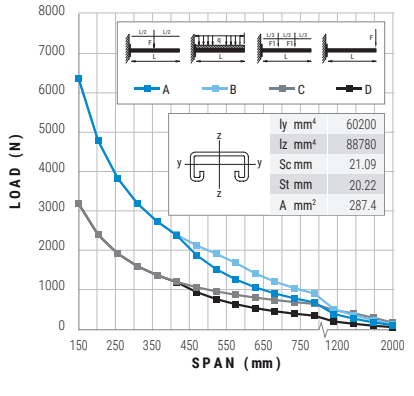

| + 31 10 522 33 51 | info@eurostrut.com | eurostrut.com

ES2631T | Eurostrut | Slotted Strut Cantilever Arm 2x(21x41x2,5mm)

SPECIFICATIONS

- Spot welded back to back.
- Available in:
  - Carbon steel, hot dip galvanized (HDG), in accordance with NEN-EN-ISO 1461.
  - Stainless steel A4 / 316L (SS).
  - Carbon steel, electro zinc plated (EZP).
- Lengths 150, 450 and 750mm on request.

Available surface finishes	Change HDG to	Stock
Hot dip galvanized	-	●
Stainless steel A4 / 316L	SS	●
Electro zinc plated	EZP	●



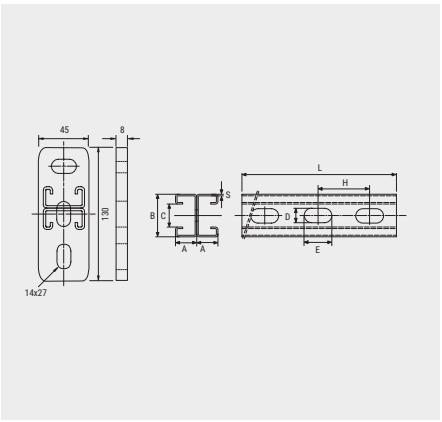

	Article number	L mm	AxBxS mm	C mm	DxE mm	H mm		kg/ unit
●	ES2631T/100HDG	100	21x41x2,5	22,3	11x27	50	1	0,39
●	ES2631T/150HDG	150	21x41x2,5	22,3	11x27	50	1	0,65
●	ES2631T/200HDG	200	21x41x2,5	22,3	11x27	50	1	0,92
●	ES2631T/300HDG	300	21x41x2,5	22,3	11x27	50	1	1,45
●	ES2631T/400HDG	400	21x41x2,5	22,3	11x27	50	1	1,90
●	ES2631T/450HDG	450	21x41x2,5	22,3	11x27	50	1	1,97
●	ES2631T/500HDG	500	21x41x2,5	22,3	11x27	50	1	2,40
●	ES2631T/600HDG	600	21x41x2,5	22,3	11x27	50	1	2,50
●	ES2631T/700HDG	700	21x41x2,5	22,3	11x27	50	1	2,95
●	ES2631T/750HDG	750	21x41x2,5	22,3	11x27	50	1	3,04
●	ES2631T/800HDG	800	21x41x2,5	22,3	11x27	50	1	3,31
●	ES2631T/900HDG	900	21x41x2,5	22,3	11x27	50	1	3,86
●	ES2631T/1000HDG	1000	21x41x2,5	22,3	11x27	50	1	4,49

● In stock ● Limited stock ● On request

σ_{zul}=160 N/mm
f_{zul}=l/200

LOAD DATA

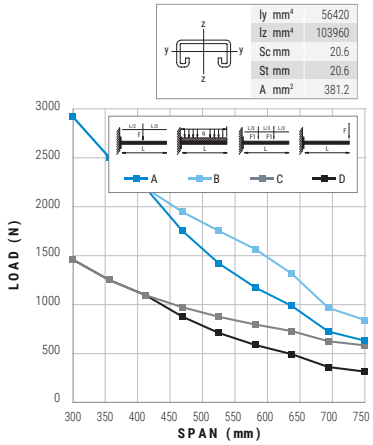

ES2665T | Eurostrut | Slotted Strut Cantilever Arm 2x(41x41x2,5mm)

SPECIFICATIONS

- Spot welded back to back.
- Available in:
  - Carbon steel, hot dip galvanized (HDG), in accordance with NEN-EN-ISO 1461.
  - Stainless steel A4 / 316L (SS).
  - Carbon steel, electro zinc plated (EZP).
- Lengths 150, 450 and 750mm on request.

Available surface finishes	Change HDG to	Stock
Hot dip galvanized	-	●
Stainless steel A4 / 316L	SS	●
Electro zinc plated	EZP	●



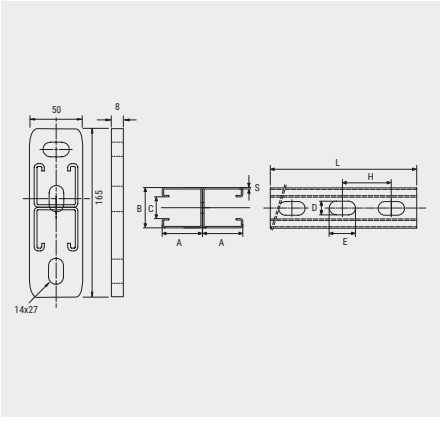

	Article number	L mm	AxBxS mm	C mm	DxE mm	H mm		kg/ unit
●	ES2665T/100HDG	100	41x41x2,5	22,3	14x27	50	1	1,13
●	ES2665T/150HDG	150	41x41x2,5	22,3	14x27	50	1	1,15
●	ES2665T/200HDG	200	41x41x2,5	22,3	14x27	50	1	1,56
●	ES2665T/300HDG	300	41x41x2,5	22,3	14x27	50	1	2,07
●	ES2665T/400HDG	400	41x41x2,5	22,3	14x27	50	1	2,58
●	ES2665T/450HDG	450	41x41x2,5	22,3	14x27	50	1	2,83
●	ES2665T/500HDG	500	41x41x2,5	22,3	14x27	50	1	3,09
●	ES2665T/600HDG	600	41x41x2,5	22,3	14x27	50	1	3,59
●	ES2665T/700HDG	700	41x41x2,5	22,3	14x27	50	1	4,11
●	ES2665T/750HDG	750	41x41x2,5	22,3	14x27	50	1	4,36
●	ES2665T/800HDG	800	41x41x2,5	22,3	14x27	50	1	4,61
●	ES2665T/900HDG	900	41x41x2,5	22,3	14x27	50	1	5,12
●	ES2665T/1000HDG	1000	41x41x2,5	22,3	14x27	50	1	5,88

● In stock ● Limited stock ● On request

σ_{zul}=160 N/mm
f_{zul}=l/200

LOAD DATA

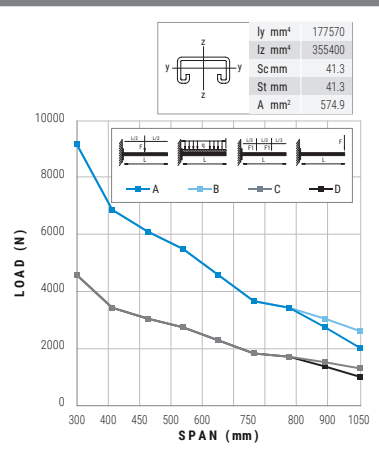

ES2668T | Eurostrut | Rotated Slotted Strut Cantilever Arm 41x41x2,5mm

SPECIFICATIONS

- Easy to adjust.
- Available in:
  - Carbon steel, hot dip galvanized (HDG), in accordance with NEN-EN-ISO 1461.
  - Stainless steel A4 / 316L (SS).
  - Carbon steel, electro zinc plated (EZP).
- Lengths 150, 450 and 750mm on request.

Available surface finishes	Change HDG to	Stock
Hot dip galvanized	-	●
Stainless steel A4 / 316L	SS	●
Electro zinc plated	EZP	●

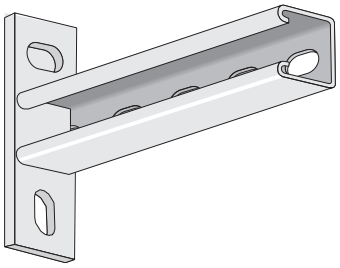

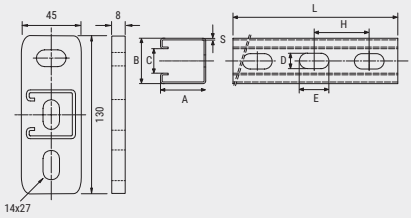

	Article number	L mm	AxBxS mm	C mm	DxE mm	H mm		kg/ unit
●	ES2668T/100HDG	100	41x41x2,5	22,3	14x27	50	1	0,47
●	ES2668T/150HDG	150	41x41x2,5	22,3	14x27	50	1	0,86
●	ES2668T/200HDG	200	41x41x2,5	22,3	14x27	50	1	0,86
●	ES2668T/300HDG	300	41x41x2,5	22,3	14x27	50	1	1,25
●	ES2668T/400HDG	400	41x41x2,5	22,3	14x27	50	1	1,32
●	ES2668T/450HDG	450	41x41x2,5	22,3	14x27	50	1	1,48
●	ES2668T/500HDG	500	41x41x2,5	22,3	14x27	50	1	1,62
●	ES2668T/600HDG	600	41x41x2,5	22,3	14x27	50	1	2,03
●	ES2668T/700HDG	700	41x41x2,5	22,3	14x27	50	1	2,13
●	ES2668T/750HDG	750	41x41x2,5	22,3	14x27	50	1	2,26
●	ES2668T/800HDG	800	41x41x2,5	22,3	14x27	50	1	2,39
●	ES2668T/900HDG	900	41x41x2,5	22,3	14x27	50	1	2,59
●	ES2668T/1000HDG	1000	41x41x2,5	22,3	14x27	50	1	2,79

● In stock ● Limited stock ● On request

σ_{zul}=160 N/mm
f_{zul}=l/200

LOAD DATA

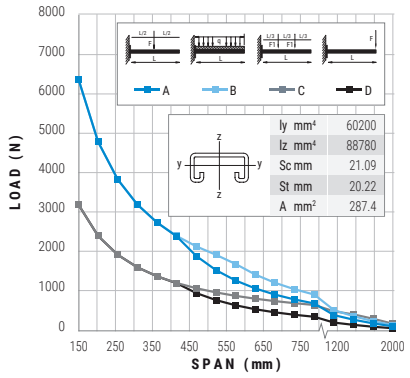

ESCON300/200 | Eurostrut | Heavy Duty Wall Bracket

SPECIFICATIONS

- Triangular shaped welded bracket manufactured from hot rolled steel.
- Perforated on two sides.
- Suitable for installation in two directions.
- Material: Steel
- Finish: Hot dip galvanized

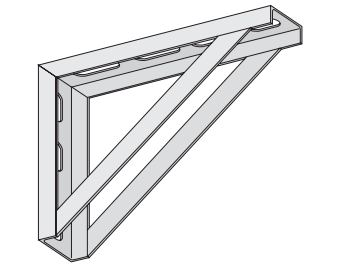

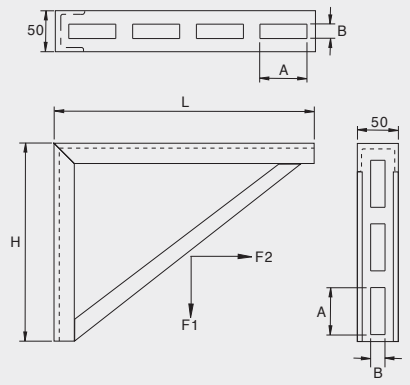

	Article number	H mm	L mm	A mm	B mm	Static load 1 F1 N	Static load 2 F2 N
●	ESCON300/200	240	315	63	19	4000	8000

● In stock ● Limited stock ● On request

ESCON550/350 | Eurostrut | Heavy Duty Wall Bracket

SPECIFICATIONS

- Triangular shaped welded bracket manufactured from hot rolled steel.
- Perforated on two sides.
- Suitable for installation in two directions.
- Material: Steel
- Finish: Hot dip galvanized

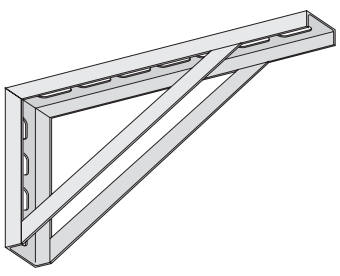

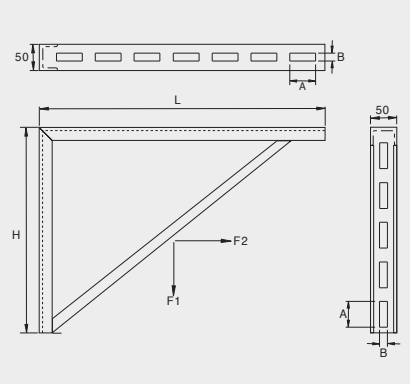

	Article number	H mm	L mm	A mm	B mm	Static load 1 F1 N	Static load 2 F2 N
●	ESCON550/350	350	550	63	19	4000	8000

● In stock ● Limited stock ● On request

| + 31 10 522 33 51 | info@eurostrut.com | eurostrut.com

EHDBB | Eurostrut | Heavy Duty Beam Bracket

SPECIFICATIONS

- Surface finish:
  - Hot dip galvanized (HDG)
  - Stainless steel 316L (SS316)
  - Stainless steel 304 (SS304)

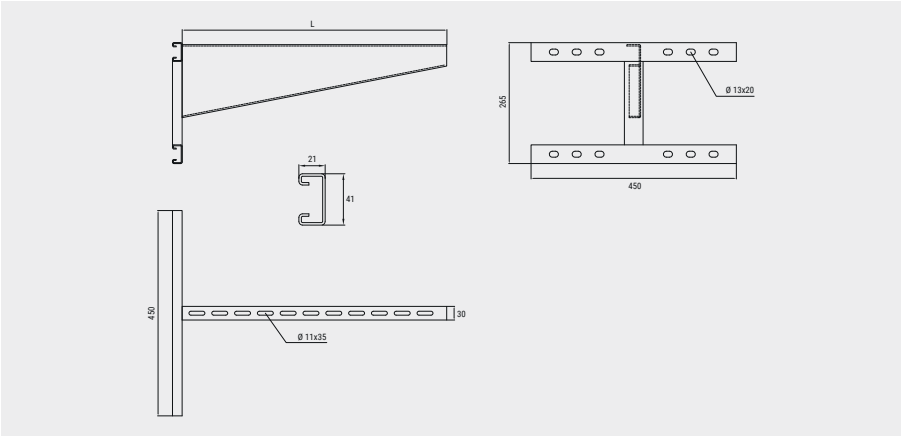

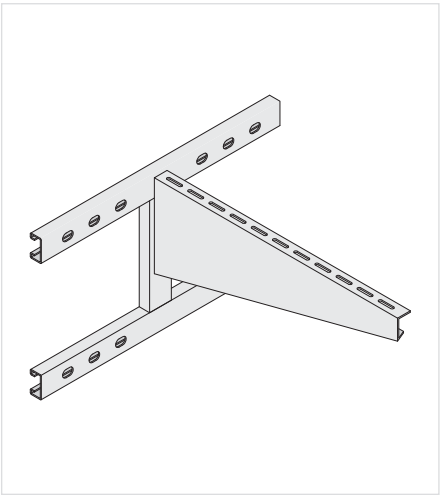

	Article number HDG		Article number SS316		Article number SS304	L mm	t mm
●	EHDBB200-HDG	●	EHDBB200-SS316	●	EHDBB200-SS304	280	3
●	EHDBB300-HDG	●	EHDBB300-SS316	●	EHDBB300-SS304	380	3
●	EHDBB400-HDG	●	EHDBB400-SS316	●	EHDBB400-SS304	480	3
●	EHDBB500-HDG	●	EHDBB500-SS316	●	EHDBB500-SS304	580	3
●	EHDBB600-HDG	●	EHDBB600-SS316	●	EHDBB600-SS304	680	3
●	EHDBB700-HDG	●	EHDBB700-SS316	●	EHDBB700-SS304	780	3
●	EHDBB800-HDG	●	EHDBB800-SS316	●	EHDBB800-SS304	880	3
●	EHDBB900-HDG	●	EHDBB900-SS316	●	EHDBB900-SS304	980	3
●	EHDBB1000-HDG	●	EHDBB1000-SS316	●	EHDBB1000-SS304	1080	3
●	EHDBB1100-HDG	●	EHDBB1100-SS316	●	EHDBB1100-SS304	1180	3

● In stock ● Limited stock ● On request

ELDWB | Eurostrut | Light Duty Wall Bracket

SPECIFICATIONS

- Surface finish:
  - Hot dip galvanized (HDG)
  - Stainless steel 316L (SS316)
  - Stainless steel 304 (SS304)

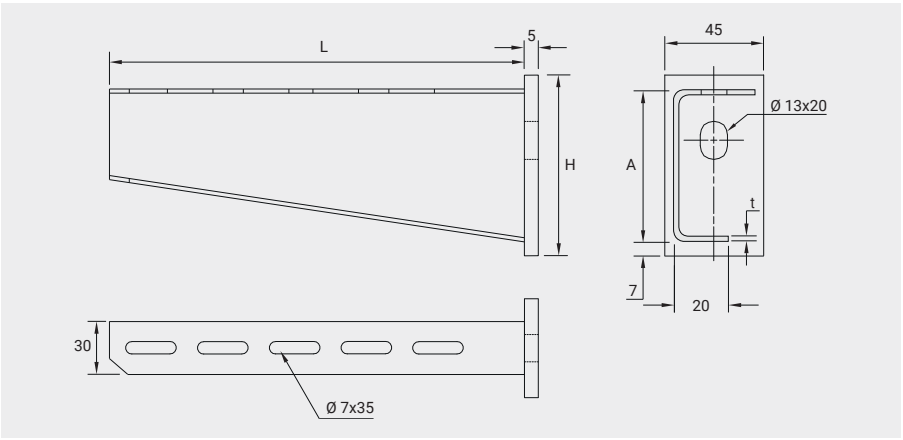

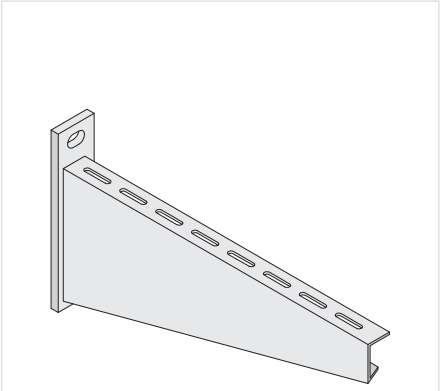

	Article number HDG		Article number SS316		Article number SS304	L mm	A mm	H mm	t mm
●	ELDWB100-HDG	●	ELDWB100-SS316	●	ELDWB100-SS304	120	83	97	1,5
●	ELDWB150-HDG	●	ELDWB150-SS316	●	ELDWB150-SS304	170	83	97	1,5
●	ELDWB200-HDG	●	ELDWB200-SS316	●	ELDWB200-SS304	220	83	97	1,5
●	ELDWB300-HDG	●	ELDWB300-SS316	●	ELDWB300-SS304	320	83	97	1,5
●	ELDWB400-HDG	●	ELDWB400-SS316	●	ELDWB400-SS304	420	103	117	2,0
●	ELDWB500-HDG	●	ELDWB500-SS316	●	ELDWB500-SS304	520	103	117	2,0
●	ELDWB600-HDG	●	ELDWB600-SS316	●	ELDWB600-SS304	620	103	117	2,0
●	ELDWB700-HDG	●	ELDWB700-SS316	●	ELDWB700-SS304	720	103	117	2,0

● In stock ● Limited stock ● On request

EHDWB | Eurostrut | Heavy Duty Wall Bracket

SPECIFICATIONS

- Surface finish:
  - Hot dip galvanized (HDG)
  - Stainless steel 316L (SS316)
  - Stainless steel 304 (SS304)

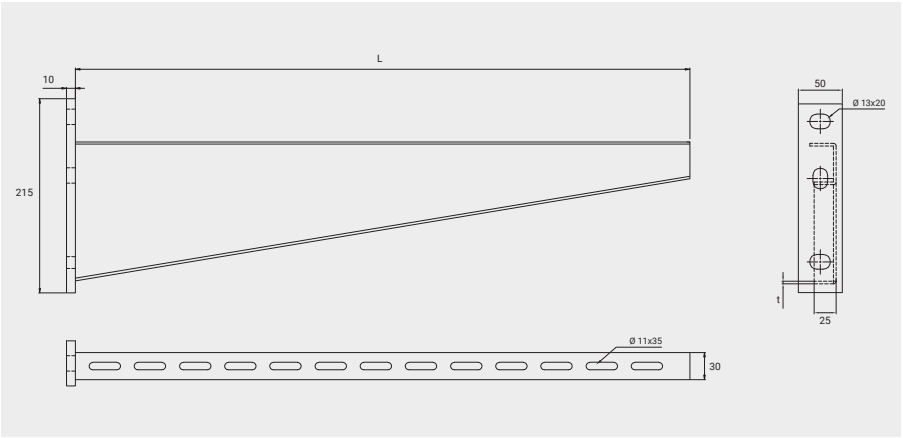

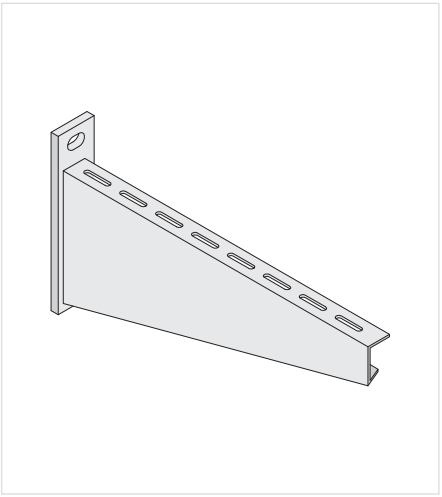

	Article number HDG		Article number SS316		Article number SS304	L mm	t mm
●	EHDWB200-HDG	●	EHDWB200-SS316	●	EHDWB200-SS304	280	3
●	EHDWB300-HDG	●	EHDWB300-SS316	●	EHDWB300-SS304	380	3
●	EHDWB400-HDG	●	EHDWB400-SS316	●	EHDWB400-SS304	480	3
●	EHDWB500-HDG	●	EHDWB500-SS316	●	EHDWB500-SS304	580	3
●	EHDWB600-HDG	●	EHDWB600-SS316	●	EHDWB600-SS304	680	3
●	EHDWB700-HDG	●	EHDWB700-SS316	●	EHDWB700-SS304	780	3
●	EHDWB800-HDG	●	EHDWB800-SS316	●	EHDWB800-SS304	880	3
●	EHDWB900-HDG	●	EHDWB900-SS316	●	EHDWB900-SS304	980	3
●	EHDWB1000-HDG	●	EHDWB1000-SS316	●	EHDWB1000-SS304	1080	3
●	EHDWB1100-HDG	●	EHDWB1100-SS316	●	EHDWB1100-SS304	1180	3

● In stock ● Limited stock ● On request

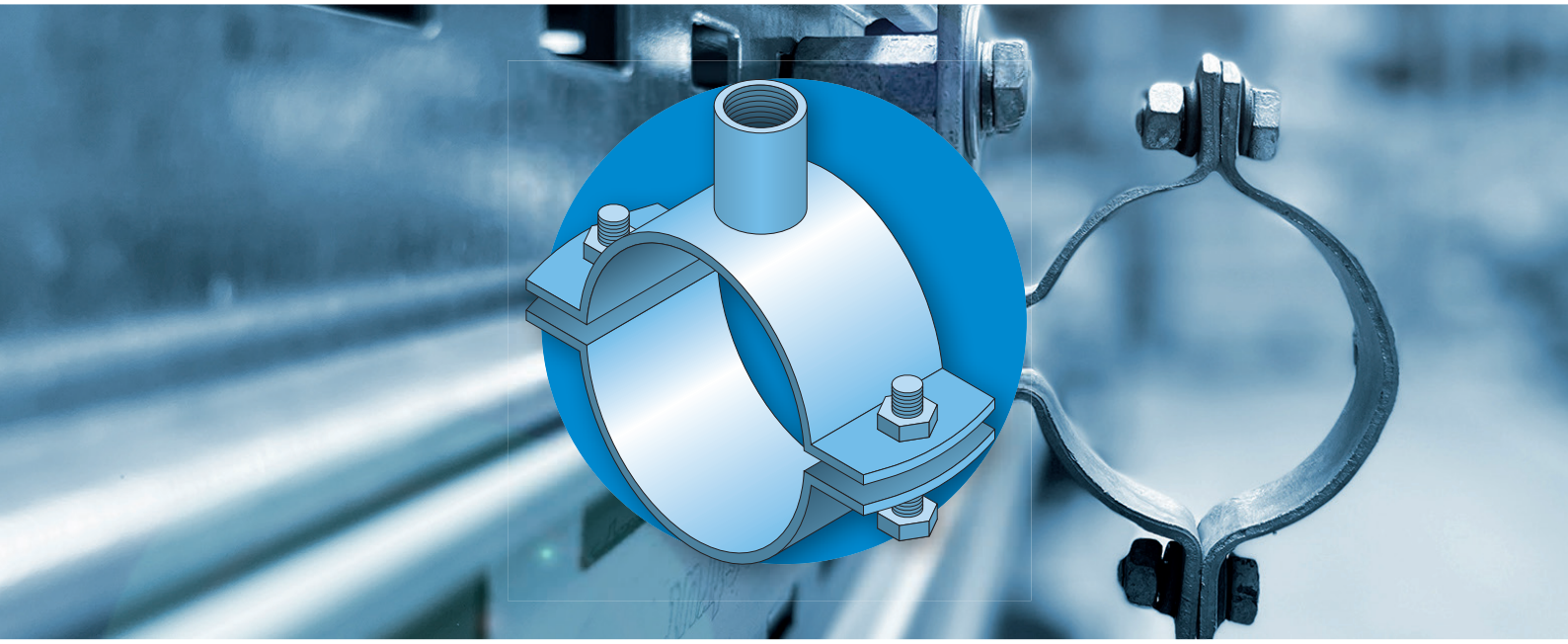

Mounting Systems
Eurostrut Clamps



Stay up to date!

Follow **@eurostrut** on social media and sign in to our newsletter:
www.eurostrut.com/en/newsletter

General conditions

- Eurostrut Support Systems & Solutions B.V. is not liable for cable management systems that are incorrectly installed or where different parts or maintenance methods are applied.
- Although the product information shown in this catalog is accurate and reliable, Eurostrut Support Systems & Solutions B.V. can not be held responsible and liable for inaccuracies.
- The performance data are specific and may be subject to variations due to normal manufacturing tolerances.
- Eurostrut Support Systems & Solutions B.V. reserves the right to change performance information or specifications at any time without notice.

2ba

The convenience of 2ba

Eurostrut's products are listed with all associated information in 2BA's central article database. Product, price and stock information must be continuously available in order to operate efficiently. The 2BA data pool offers the solution.
2ba.nl

The main advantages of 2BA:

- Design, calculate and order more efficiently because all product and price information comes from the same source.
- Data is directly available via the leading ERP software packages or your own custom system.
- You have your own net purchase prices based on Eurostrut's agreed purchasing conditions.

Eurostrut is **ISO 9001 certified**, ensuring quality management across all processes to meet customer requirements and specifications.

By achieving **step 3** certification on the **CO_2 Performance Ladder**, Eurostrut demonstrates its commitment to environmental responsibility and fostering a healthy living environment.

ES2785/2786/2787 | Eurostrut | Strut Beam Clamp with U-bolt

SPECIFICATIONS

- Available in:
  - Hot dip galvanized (HDG).
  - Stainless steel A4 / 316L (SS).
- To create metal frames with strut channels.



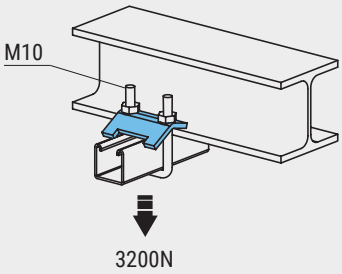

Application ES2785

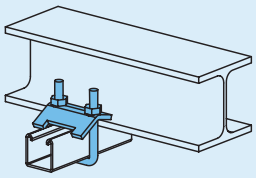

Application ES2786

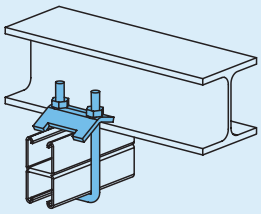

Application ES2787

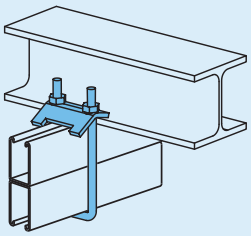

	Article number	mm		kg/ unit
●	ES2785HDG	21-41	10	0,36
●	ES2785SS	21-41	10	0,36
●	ES2786HDG	62-82	10	0,40
●	ES2786SS	62-82	10	0,40
●	ES2787HDG	124	10	0,45
●	ES2787SS	124	10	0,45

● In stock ● Limited stock ● On request

ES1386 | Eurostrut | Strut Beam Clamp

SPECIFICATIONS

- For 41mm strut channel.
- Available in:
  - Hot dip galvanized (HDG).
  - Stainless steel A4 / 316L (SS).
- To create metal frames with strut channels.
- For bolts M12.
- Excl. bolt and channel nut.



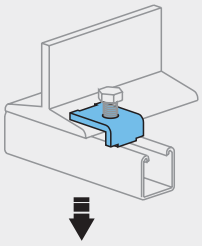

	Article number		kg/ unit
●	ES1386HDG	50	0,05
●	ES1386SS	50	0,05

● In stock ● Limited stock ● On request

ES1272 | Eurostrut | Strut Beam Clamp

SPECIFICATIONS

- For 41mm strut channel.
- With cone pointed bolt.
- Available in:
  - Hot dip galvanized (HDG).
  - Stainless steel A4 / 316L (SS).
- To create metal frames with strut channels.
- For bolts M12.



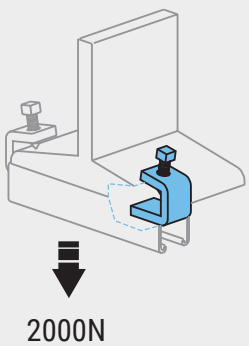

	Article number		kg/ unit
●	ES1272HDG	50	0,14
●	ES1272SS	50	0,14

● In stock ● Limited stock ● On request

ES1271 | Eurostrut | Strut Beam Clamp

SPECIFICATIONS

- For 41mm strut channel.
- With cone pointed bolt.
- Available in:
  - Hot dip galvanized (HDG).
  - Stainless steel A4 / 316L (SS).
- To create metal frames with strut channels.
- For bolts M12.

	Article number		kg/ unit
●	ES1271HDG	10	0,47
●	ES1271SS	10	0,47

● In stock ● Limited stock ● On request



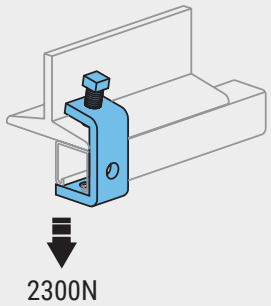

ES1796/1796A/1796B | Eurostrut | Strut Beam Clamp

SPECIFICATIONS

- With cone pointed bolt.
- Available in:
  - Hot dip galvanized (HDG).
  - Stainless steel A4 / 316L (SS).
- To create metal frames with strut channels.

	Article number	mm		kg/ unit
●	ES1796HDG	41x41	10	0,43
●	ES1796SS	41x41	10	0,43
●	ES1796AHDG	21x41	10	0,39
●	ES1796ASS	21x41	10	0,39
●	ES1796BHDG	82x41	10	0,46

● In stock ● Limited stock ● On request



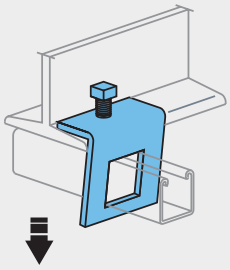

ES2489 | Eurostrut | Strut Internal Beam Clamp

SPECIFICATIONS

- For 41mm strut channel.
- With bolt M10.
- Available in:
  - Hot dip galvanized (HDG).
- To create metal frames with strut channels.

	Article number		kg/ unit
●	ES2489HDG	25	0,20

● In stock ● Limited stock ● On request



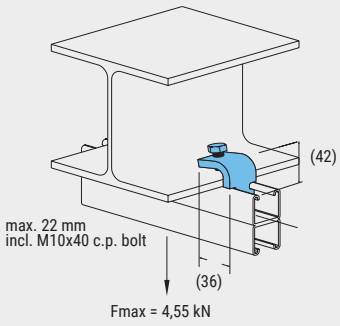

ES1983 | Eurostrut | Z Beam Clamp

SPECIFICATIONS

- Available in:
  - Hot dip galvanized (HDG).
  - Stainless steel A4 / 316L (SS).
- To create metal frames with strut channels.

	Article number		kg/ unit
●	ES1983HDG		
●	ES1983SS		

● In stock ● Limited stock ● On request



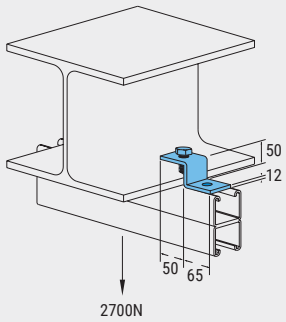

ES711 | Eurostrut | Bended Beam Clamp with 1 Slotted Hole

SPECIFICATIONS

- For 41mm strut channel.
- Available in:
  - Hot dip galvanized (HDG).
  - Stainless steel A4 / 316L (SS).
- To create metal frames with strut channels.
- For all strut channels.



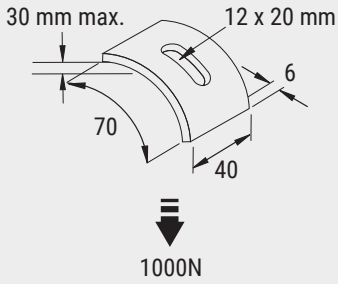

	Article number		kg/ unit
●	ES711HDG	25	0,12
●	ES711SS	25	0,12

● In stock ● Limited stock ● On request

330600/330610 | Eurostrut | Beam Clamp type 6000

SPECIFICATIONS

- For 41mm strut channels.
- With stud nut M10.
- Available in:
  - Hot dip galvanized (HDG).
  - Stainless steel A4 / 316L (SS).
- To create metal frames with strut channels.



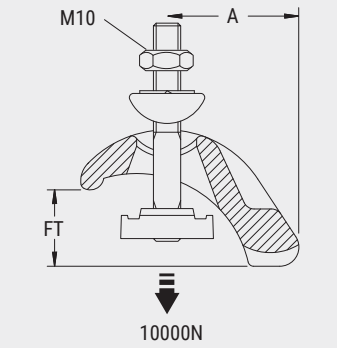

	Article number	Finish	FT mm	A mm	Nm
●	330600	HDG	3-35	50-60	30
●	330610	SS	3-35	50-60	30

● In stock ● Limited stock ● On request

ESP10/ESP12/ESP16 | Eurostrut | Universal Beam Clamp

SPECIFICATIONS

For fixing profiles and cross-members to supports, hanging pipes and channels on steel beams.

- Clamping range up to 35 mm (ESP12 & ESP 16)
- Universal use
- Material: White malleable cast iron GTW 45, zinc plated

The breaking forces are determined using a hex head bolt and nut (grade 8.8). They are divided by the appropriate safety factor to obtain the value for the rated load.

Normal safety factor: 10

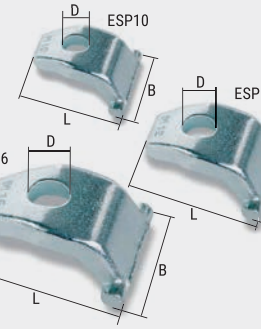

Application

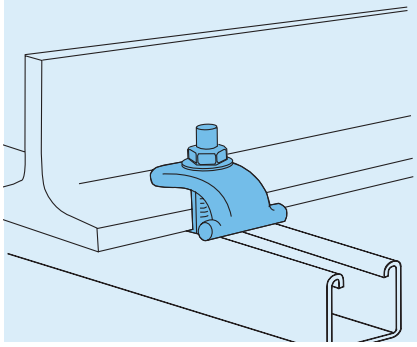

	Article number	Clamping Range mm	Breaking Load Kgf	Breaking Load KN	For Bolts	D mm	L mm	B mm	
●	ESP10	1-25	4500	45	M10	11	47	43	50
●	ESP12	1-35	8000	80	M12	13	66	51	25
●	ESP16	1-35	9000	90	M16	17	65	63	25

● In stock ● Limited stock ● On request

ES3087 | Eurostrut | Internal Beam Clamp

SPECIFICATIONS

- For 41mm strut channels.
- With bolts M10.
- Available in:
  - Hot dip galvanized (HDG).
  - Stainless steel A4 / 316L (SS).
- To create metal frames with strut channels.



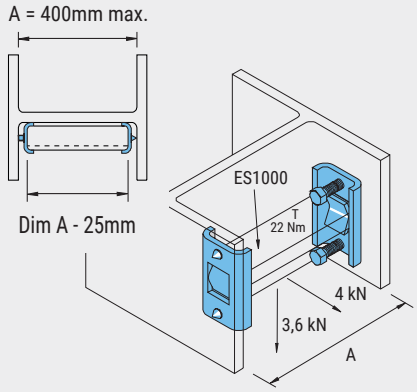

	Article number		kg/ unit
●	ES3087HDG	20	0,58
●	ES3087SS	20	0,58

● In stock ● Limited stock ● On request

BTK | Eurostrut | Universal Beam Clamp Wide Mouth

SPECIFICATIONS

- Setscrew must be tightened and torqued onto the sloped side of the I-beam.
- Material: Cast iron
- Surface finish:
  - Electro-galvanized

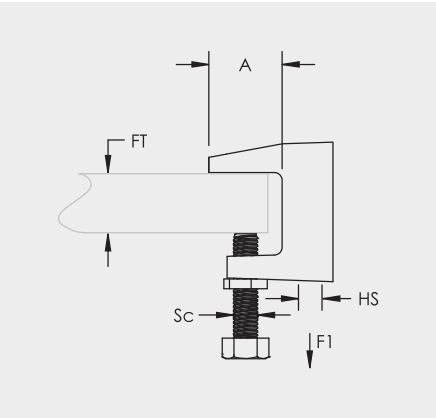

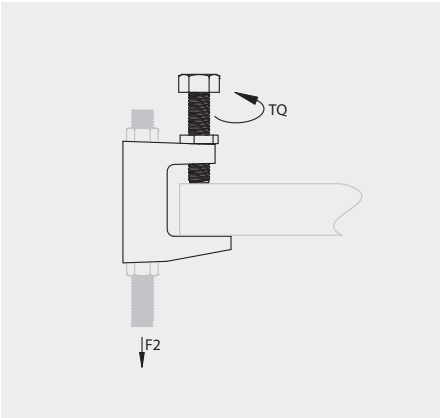







	Article number	Hole size HS	Hole type	Flange thickness FT mm Max	A mm	Screw diameter Sc Inch	Torque TQ Nm	Static load F1 N	Static load F2 N	Approvals
●	BTKM10	M10	Threaded	31,8	28,6	3/8	7	2.200	1.100	cULus, FM,
●	BTKM12	M12	Threaded	31,8	28,6	1/2	15	4.200	3.300	cULus, FM,

● In stock ● Limited stock ● On request

TKN | Eurostrut | Universal Beam Clamp

SPECIFICATIONS

- Setscrew must be tightened and torqued onto the sloped side of the I-beam.
- Material: Cast iron
- Surface finish:
  - Electro-galvanized
  - Geomet (GEO)
  - Stainless steel 316L (SS316)

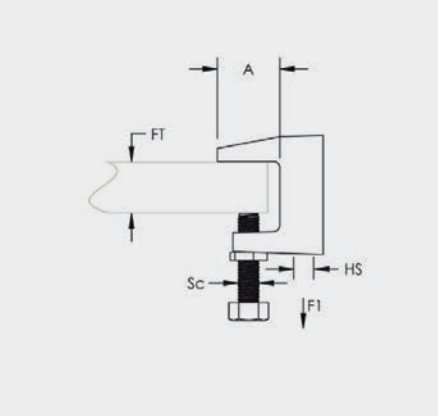

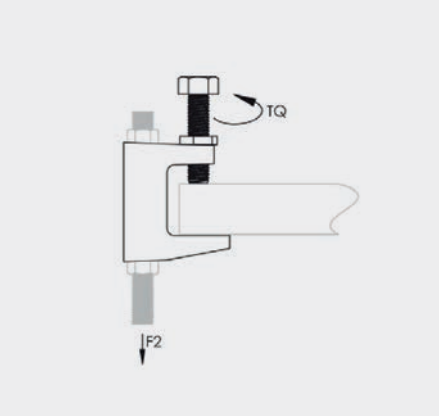







	Article number	Hole size HS	Hole type	Flange thickness FT mm Max	A mm	Screw diameter Sc M	Torque TQ Nm	Static load F1 N	Static load F2 N	Approvals
	Material: Steel | Finish: Electro-galvanized									
●	TKN8	9 mm	Plain	20,6	21	M8	14	1.200	1.200	VdS
●	TKN10	11 mm	Plain	20,6	23	M10	14	2.500	2.500	FM, VdS
●	TKN12	13 mm	Plain	20,6	35	M10	14	3.500	3.500	FM, VdS
●	TKN16	17 mm	Plain	20,6	30	M12	14	5.500	5.500	FM, VdS
	Material: Steel | Finish: GEO									
●	TKN8 GEO	9 mm	Plain	20,6	21	M8	14	1.200	1.200	–
●	TKN10 GEO	11 mm	Plain	20,6	23	M10	14	2.500	2.500	–
	Material: Stainless steel 316L									
●	TKN8 SS316	9 mm	Plain	16	21,5	M10	7-9	1.000	1.000	–
●	TKN10 SS316	11 mm	Plain	16	21,5	M10	17-20	1.000	1.000	–
●	TKN12 SS316	13 mm	Plain	16	21,5	M10	20-23	1.300	1.300	–

	Article number	Hole size HS	Hole type	Flange thickness FT mm Max	A mm	Screw diameter Sc M	Torque TQ Nm	Static load F1 N	Static load F2 N	Approvals
	Material: Steel | Finish: Electro-galvanized									
●	TKNM6	M6	Threaded	20,6	21	M8	14	1.200	1.200	–
●	TKNM8	M8	Threaded	20,6	21	M8	14	1.200	1.200	VdS
●	TKNM10	M10	Threaded	20,6	23	M10	14	2.500	2.500	FM, VdS
●	TKNM12	M12	Threaded	20,6	35	M10	14	3.500	3.500	FM, VdS

● In stock ● Limited stock ● On request

Eurostrut | Multi-Function C-Clamp

SPECIFICATIONS

- Setscrew must be tightened and torqued onto the sloped side of the I-beam.
- Multi-functional beam clamp.
- Use with Cable/Conduit/Pipe Clamp or Square Washer for Multi-Function C-Clamp.
- Surface finish:
  - Hot dip galvanized (HDG)
  - Stainless steel 304 (304)

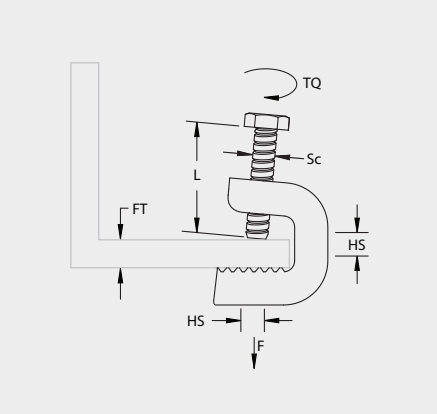



	Article number	Flange thickness FT mm	Hole size HS	Screw diameter Sc M	Screw lenght L mm	Torque TQ Nm	Static load F N
	Material: Steel | Finish: Hot dip galvanized						
●	336100	4 - 20	14	M6	25	3	1.100
●	336110	17 - 30	14	M8	30	3	1.100
●	336120	30 - 44	14	M8	30	3	1.100
	Material: Stainless steel 304						
●	336130	4 - 20	14	M6	25	3	1.100
●	336140	17 - 30	14	M8	30	3	1.100
●	336150	30 - 44	14	M8	30	3	1.100

● In stock ● Limited stock ● On request

Eurostrut | Flange Protector for Multi-Function C-Clamp

SPECIFICATIONS

- When the laquer protective plates are used, the clamping range is reduced by approximately 3 mm and the permissible load must be reduced by 20%.
- The screw tip should be placed so it will not damage the paint of the steel structure.
- Surface finish:
  - Hot dip galvanized (HDG)
  - Stainless steel 304 (304)

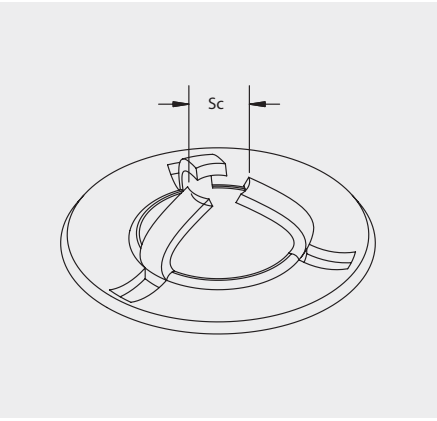



	Article number	Screw diameter Sc
	Material: Steel | Finish: Hot dip galvanized	
●	336200	M6
●	336210	M8
	Material: Stainless steel 304	
●	336220	M6
●	336230	M8

● In stock ● Limited stock ● On request

ES20 & ES40 | Eurostrut | Universal Beam Clamp

SPECIFICATIONS

- Material: Steel Q235
- Surface finish: Hot Dip Galvanised

* This force is strongly dependent on the hardness of the clamping surface. A global safety factor of 2.0 was used to determine safe working loads

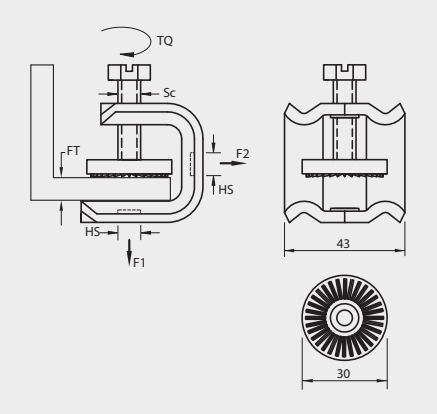



	Article number	Flange thickness FT mm	Hole size HS M	Screw diameter Sc M	Torque TQ Nm	Static load F1 N	Static load F2 N
●	ES20M8	5 - 20	M8	M8	3,5	1300	800*
●	ES20M10	5 - 20	M10	M8	3,5	1300	800*
●	ES40M8	20 - 40	M8	M8	3,5	1300	800*

● In stock ● Limited stock ● On request

EVBC-166HDG | Eurostrut | Vertical Beam Clamp

SPECIFICATIONS

- This beam clamp is for clamping on steel flange.
- For vertical mounting of small width (100 mm max.) cable tray, wire mesh cable tray or pipe.
- Material: Steel
- Finish: Hot dip galvanized



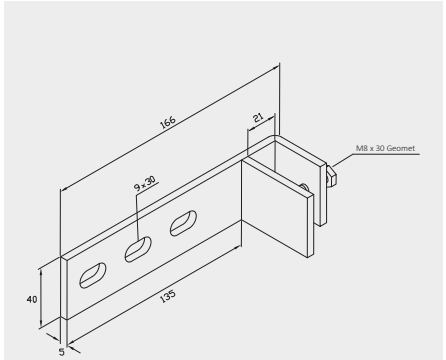

	Article number	Flange thickness mm	Hole size mm	Fixing screw	Total lenght mm	Mounting width mm		Weight kg/unit
●	EVBC-166HDG	5 - 20	9 x 30	M8 x 30	166	135	10	0,45

● In stock ● Limited stock ● On request

EHBC-187HDG | Eurostrut | Horizontal Beam Clamp

SPECIFICATIONS

- This beam clamp is for clamping on steel flange.
- For horizontal mounting of small width (100 mm max.) cable tray, wire mesh cable tray or pipe.
- Material: Steel
- Finish: Hot dip galvanized



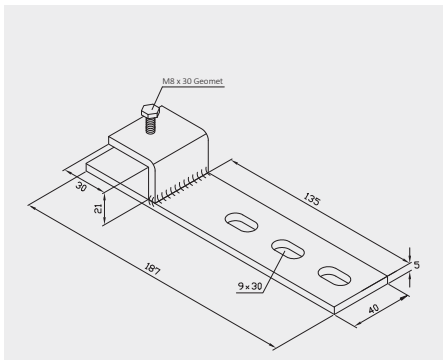

	Article number	Flange thickness mm	Hole size mm	Fixing screw	Total lenght mm	Mounting width mm		Weight kg/unit
●	EHBC-187HDG	5 – 20	9 x 30	M8 x 30	187	135	10	0,45

● In stock ● Limited stock ● On request

C-ES | Eurostrut | Cable to Vertical Flange Clamp

SPECIFICATIONS

- Supports multiple runs of cable.
- Attaches to beam flanges, angle iron, joists and other structural supports.
- Material: Steel
- Finish: Hot dip galvanized



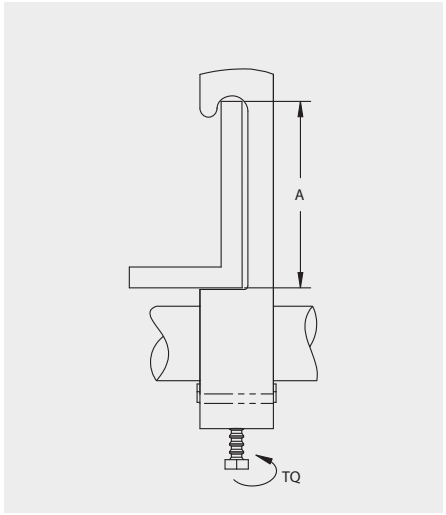

	Article number	Outer diameter OD mm	A mm	Torque TQ Nm
●	337000	6 - 12	40	2
●	337010	12 - 16	40	2
●	337020	16 - 20	40	2
●	337030	20 - 24	40	2
●	337040	24 - 28	40	2
●	337050	28 - 32	40	2
●	337060	32 - 36	40	2
●	337070	36 - 40	40	2
●	337080	40 - 44	40	4
●	337090	44 - 48	40	4
●	337100	48 - 52	40	4
●	337110	52 - 56	40	4
●	337120	56 - 60	40	4
●	337130	60 - 64	40	4
●	337140	64 - 70	40	4
●	337150	70 - 76	40	4
●	337160	76 - 82	40	4

● In stock ● Limited stock ● On request

C-EU | Eurostrut | Single Cable to Flange Clamp

SPECIFICATIONS

- Supports multiple runs of cable.
- Attaches to beam flanges, angle iron, joists and other structural supports.
- Material: Steel
- Finish: Hot dip galvanized



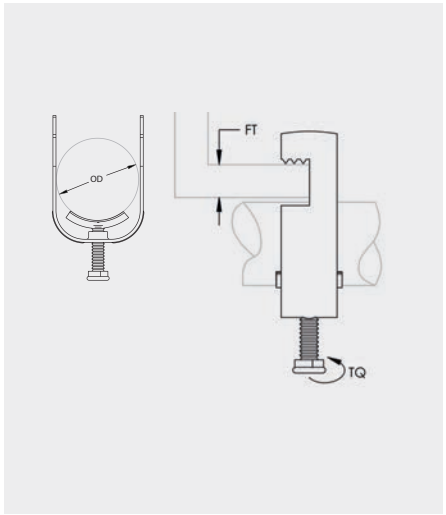

	Article number	Outer diameter OD mm	Flange thickness FT mm Max	Torque TQ Nm
●	337300	6 - 12	12	2
●	337310	12 - 16	12	2
●	337320	16 - 20	12	2
●	337330	20 - 24	12	2
●	337340	24 - 28	12	2
●	337350	28 - 32	12	2
●	337360	32 - 36	12	2
●	337370	36 - 40	12	2
●	337380	40 - 44	12	4
●	337390	44 - 48	12	4
●	337400	48 - 52	12	4
●	337410	52 - 56	12	4
●	337420	56 - 60	12	4
●	337430	60 - 64	12	4
●	337440	64 - 70	12	4
●	337450	70 - 76	12	4
●	337460	76 - 82	12	4

● In stock ● Limited stock ● On request

ESC1 | Eurostrut | Strut Cable Clamp

SPECIFICATIONS

- Available in:
  - Hot dip galvanized (HDG).
- For fixing cables.



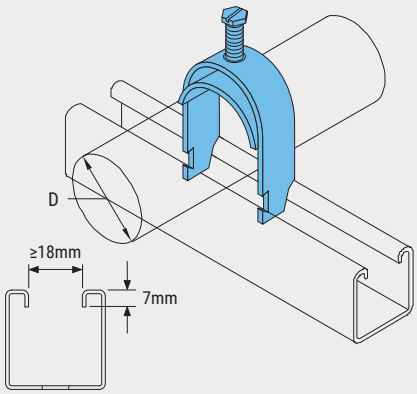

	Article number	D mm		kg/ unit
●	ESC1-06/12	6-12	100	0,026
●	ESC1-12/16	12-16	100	0,030
●	ESC1-16/20	16-20	100	0,036
●	ESC1-20/24	20-24	100	0,042
●	ESC1-24/28	24-28	100	0,048
●	ESC1-28/32	28-32	100	0,060
●	ESC1-32/36	32-36	100	0,068
●	ESC1-36/40	36-40	100	0,076
●	ESC1-40/44	40-44	100	0,105
●	ESC1-44/48	44-48	100	0,120
●	ESC1-48/52	48-52	50	0,140
●	ESC1-52/56	52-56	50	0,160
●	ESC1-56/60	56-60	50	0,180
●	ESC1-60/64	60-64	50	0,200
●	ESC1-64/70	64-70	50	0,215
●	ESC1-70/76	70-76	25	0,230
●	ESC1-76/82	76-82	25	0,240
●	ESC1-82/88	82-88	25	0,255
●	ESC1-88/94	88-94	25	0,275
●	ESC1-94/100	94-100	25	0,295

● In stock ● Limited stock ● On request

Application

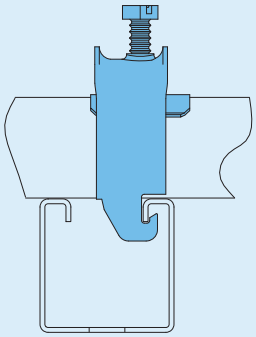

Eurostrut | Pipe/Cable Clamp

SPECIFICATIONS

- Attaches to Multi-Function C-Clamp
- Surface finish:
  - Hot dip galvanized (HDG)
  - Stainless steel 304 (304)

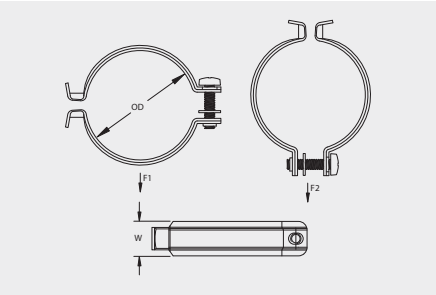



	Article number	Pipe size Inch	NB/DN	Outer diameter OD mm	Width W mm	Static load 1 F1 N	Static load 2 F2 N
	Material: Steel | Finish: Hot dip galvanized						
●	336300	3/8	10	16,0 - 20,0	16	125	550
●	336310	1/2	15	20,4 - 25,0	16	125	550
●	336320	3/4	20	26,9 - 31,8	16	125	550
●	336330	1	25	33,7 - 38,0	20	250	550
●	336340	1 ¼	32	40,0 - 44,5	20	250	550
●	336350	1 ½	40	47,0 - 51,0	20	250	550
●	336360	2	50	59,2 - 63,5	20	250	550
	Material: Stainless steel 304						
●	336400	3/8	10	16,0 - 20,0	16	125	550
●	336410	1/2	15	20,4 - 25,0	16	125	550
●	336420	3/4	20	26,9 - 31,8	16	125	550
●	336430	1	25	33,7 - 38,0	20	250	550
●	336440	1 ¼	32	40,0 - 44,5	20	250	550
●	336450	1 ½	40	47,0 - 51,0	20	250	550
●	336460	2	50	59,2 - 63,5	20	250	550

● In stock ● Limited stock ● On request

ESS2 | Eurostrut | Strut Pipe Clamp

SPECIFICATIONS

- Available in:
  - Hot dip galvanized (HDG).
  - Stainless steel A4 / 316L (SS).
- Suits strut channels, strut cantilever arms and similar channels.
- To fix pipes and cables.



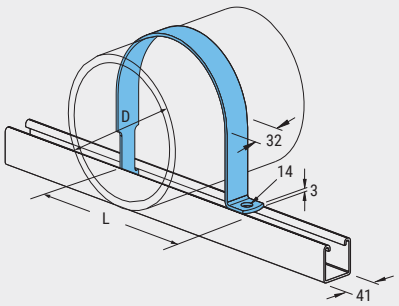

Article number				D mm	D inch	L mm		kg/ unit
	HDG		SS					
●	ESS2/AH	●	ESS2/ASS	21	½	66	100	0,059
●	ESS2/BH	●	ESS2/BSS	27	¾	73	100	0,070
●	ESS2/CH	●	ESS2/CSS	34	1	81	100	0,084
●	ESS2/DH	●	ESS2/DSS	43	1¼	90	100	0,100
●	ESS2/EH	●	ESS2/ESS	48	1½	96	100	0,112
●	ESS2/FH	●	ESS2/FSS	60	2	96	100	0,135
●	ESS2/GH	●	ESS2/GSS	76	2½	113	100	0,165
●	ESS2/HH	●	ESS2/HSS	90	3	125	100	0,189
●	ESS2/JH	●	ESS2/JSS	102		137	100	0,214
●	ESS2/KH	●	ESS2/KSS	115	4	150	100	0,240
●	ESS2/LH	●	ESS2/LSS	140	5	175	50	0,287
●	ESS2/MH	●	ESS2/MSS	168	6	204	50	0,342
●	ESS2/NH		ESS2/NSS	220	8	255	50	0,442

● In stock ● Limited stock ● On request

ES2600 | Eurostrut | Rubber Pipe Cushioning for Strut Pipe Clamps

SPECIFICATIONS

- Pipe cushioning for use in combination with ESM11 and ESS2 series strut pipe clamps.
- Suitable in combination with 41mm width strut channels.
- Suitable for pipe clamps up to 32mm
- Material: EPDM-SBR rubber (Black) SHORE A = 45° ± 5°.
- Shock absorption.
- Protection from corrosion and abrasion
- Allowance for expansion and contraction in pipe diameter.
- Sound and vibration isolation.
- Stability in use from -50° C to +110° C
- Flexible elastomer material.
- Will not support combustion.

Note: when uni-cushion is used with pipe clamps increase the pipe diameter by 3mm.



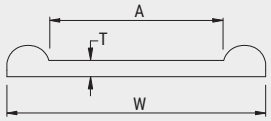

Application

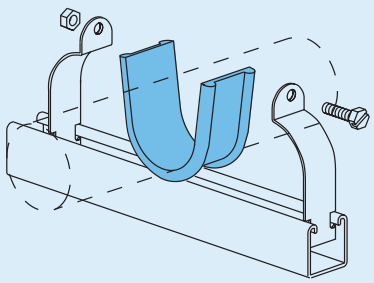

Application

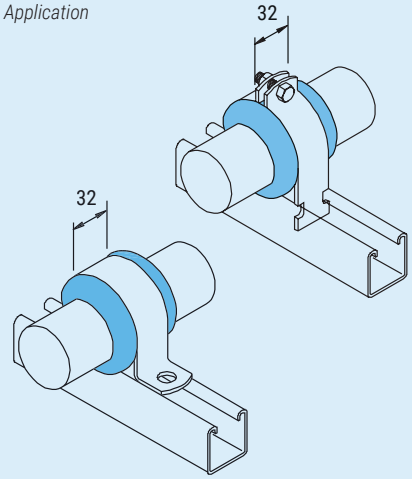

	Article number	L m	W mm	T mm	A mm
●	ES2600	8	42.7	1.5	32

● In stock ● Limited stock ● On request

ESM11 | Eurostrut | Strut Pipe Clamp

SPECIFICATIONS

- Available in:
  - Hot dip galvanized (HDG).
  - Stainless steel A4 / 316L (SS).
  - Pre galvanized (PG).
- Suits strut channels, strut cantilever arms and similar channels.
- Hex bolt and nut.
- To fix pipes and cables.



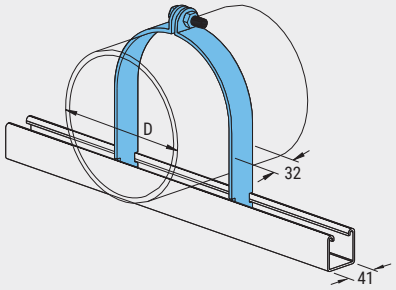

Article number			D mm			D inch	kg/ unit
PG	HDG	SS					
ESM1108PG	ESM1108HDG	ESM1108SS	8.7	-	10.3		0,035
ESM1109PG	ESM1109HDG	ESM1109SS	10.3	-	12.7		0,037
ESM1110PG	ESM1110HDG	ESM1110SS	11.9	-	13.5		0,038
ESM1111PG	ESM1111HDG	ESM1111SS	13.5	-	14.3	¼	0,039
ESM1112PG	ESM1112HDG	ESM1112SS	14.3	-	16.7		0,040
ESM1113PG	ESM1113HDG	ESM1113SS	15.9	-	18.3		0,041
ESM1114PG	ESM1114HDG	ESM1114SS	18.3	-	20.6		0,045
ESM1115PG	ESM1115HDG	ESM1115SS	19.0	-	21.4	½	0,047
ESM1116PG	ESM1116HDG	ESM1116SS	21.4	-	25.4		0,049
ESM1117PG	ESM1117HDG	ESM1117SS	25.4	-	27.8	¾	0,053
ESM1118PG	ESM1118HDG	ESM1118SS	27.0	-	30.2		0,064
ESM1119PG	ESM1119HDG	ESM1119SS	30.2	-	33.8		0,072
ESM1120PG	ESM1120HDG	ESM1120SS	31.8	-	35.9	1	0,072
ESM1121PG	ESM1121HDG	ESM1121SS	34.9	-	39.7		0,079
ESM1122PG	ESM1122HDG	ESM1122SS	39.7	-	42.9	1¼	0,084
ESM1123PG	ESM1123HDG	ESM1123SS	42.9	-	46.8		0,090
ESM1124PG	ESM1124HDG	ESM1124SS	46.8	-	50.8	1½	0,128
ESM1125PG	ESM1125HDG	ESM1125SS	48.4	-	52.4		0,131
ESM1126PG	ESM1126HDG	ESM1126SS	52.4	-	58.7		0,137
ESM1127PG	ESM1127HDG	ESM1127SS	58.7	-	63.5	2	0,150
ESM1128PG	ESM1128HDG	ESM1128SS	63.5	-	68.3		0,160
ESM1129PG	ESM1129HDG	ESM1129SS	68.3	-	73.0		0,164
ESM1130PG	ESM1130HDG	ESM1130SS	73.0	-	79.4	2½	0,171
ESM1131PG	ESM1131HDG	ESM1131SS	76.2	-	82.6		0,175
ESM1132PG	ESM1132HDG	ESM1132SS	82.6	-	88.1		0,189
ESM1133PG	ESM1133HDG	ESM1133SS	88.1	-	95.2	3	0,203
ESM1134PG	ESM1134HDG	ESM1134SS	95.2	-	100.0		0,219
ESM1135PG	ESM1135HDG	ESM1135SS	100.0	-	106.4		0,273
ESM1136PG	ESM1136HDG	ESM1136SS	106.4	-	111.1		0,286
ESM1137PG	ESM1137HDG	ESM1137SS	111.1	-	120.7	4	0,296
ESM1138PG	ESM1138HDG	ESM1138SS	120.7	-	129.4		0,318
ESM1139PG	ESM1139HDG	ESM1139SS	129.4	-	138.1		0,343
ESM1140PG	ESM1140HDG	ESM1140SS	138.1	-	149.2	5	0,348
ESM1141PG	ESM1141HDG	ESM1141SS	149.2	-	161.9		0,376
ESM1142PG	ESM1142HDG	ESM1142SS	161.9	-	174.6	6	0,410
ESM1143PG	ESM1143HDG	ESM1143SS	174.6	-	182.6		0,423
ESM1144PG	ESM1144HDG	ESM1144SS	182.6	-	190.5		0,466
ESM1145PG	ESM1145HDG	ESM1145SS	190.5	-	203.2		0,491
ESM1146PG	ESM1146HDG	ESM1146SS	203.2	-	212.7		0,501
ESM1147PG	ESM1147HDG	ESM1147SS	212.7	-	225.4	8	0,505
ESM1148PG	ESM1148HDG	ESM1148SS	225.4	-	238.1		0,524
ESM1149PG	ESM1149HDG	ESM1149SS	238.1	-	250.8		0,555
ESM1150PG	ESM1150HDG	ESM1150SS	250.8	-	263.5		0,576
ESM1151PG	ESM1151HDG	ESM1151SS	263.5	-	276.2	10	0,592
ESM1152PG	ESM1152HDG	ESM1152SS	276.2	-	288.9		0,624
ESM1153PG	ESM1153HDG	ESM1153SS	288.9	-	301.6		0,654
ESM1154PG	ESM1154HDG	ESM1154SS	301.6	-	314.3		0,679
ESM1155PG	ESM1155HDG	ESM1155SS	314.3	-	327.0	12	0,699

● In stock ● Limited stock ● On request

nVent CADDY | 115M Standard Duty Loop Hanger

SPECIFICATIONS

- Flared edges help prevent any sharp surfaces from coming into contact with the pipe (1/2" to 4" sizes).
- Retained insert nut helps ensure the loop hanger and insert nut stay together.
- Recommended for the suspension of stationary non-insulated pipe lines.
- Manufactured to use the minimum rod size permitted by NFPA® for fire sprinkler piping
- Conforms with Federal Specification WW-H-171 (Type 10), Manufacturers Standardization Society (MSS) SP-58 (Type 10).
- Finish: Pregalvanized
- Material: Steel









	Article number	Outer Ø OD mm	Pipe size Inch	NB/ DN mm	Rod size RS M	A mm	B mm	C mm	Static load F N	Approvals
●	597860	21,3	½"	15	M10	71,0	28,6	25,4	1.335	cULus, VdS
●	597870	26,9	¾"	20	M10	75,9	30,2	23,9	1.335	cULus, FM, VdS
●	597880	33,7	1"	25	M10	82,5	34,9	24,1	1.335	cULus, FM, VdS
●	597890	42,4	1 ¼"	32	M10	90,6	38,1	24,1	1.335	cULus, FM, VdS
●	597900	48,3	1 ½"	40	M10	96,7	41,3	24,1	1.335	cULus, FM, VdS
●	597910	60,3	2"	50	M10	108,6	47,6	23,9	1.335	cULus, FM, VdS
●	597920	76,0	2 ½"	65	M10	140,9	70,8	40,3	2.340	cULus, FM, VdS
●	597930	89,0	3"	80	M10	166,3	88,2	49,7	2.340	cULus, FM, VdS
●	597940	114,0	4"	100	M10	192,5	100,9	48,9	2.890	cULus, FM, VdS
●	597950	140,0	5"	125	M12	232,7	120,0	57,1	4.450	cULus, FM, VdS
●	597960	165,0	6"	150	M12	286,6	160,4	84,1	4.450	cULus, FM, VdS
●	597970	219,0	8"	200	M12	327,1	175,1	73,4	4.450	cULus, FM

● In stock ● Limited stock ● On request

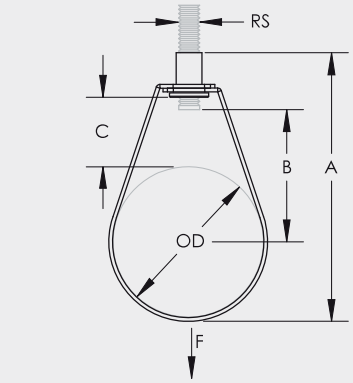

nVent CADDY | HD NI Heavy Duty Pipe Clamp, Fire/Sprinkler EV

SPECIFICATIONS

- Fillet welded connector nut has flats to accommodate spanners.
- Flared steel band also suitable for plastic pipe.
- Easy open flange for pipe sizes up to and including 4".
- Nut Included: Yes
- Material: Steel
- Finish: Electro-galvanized





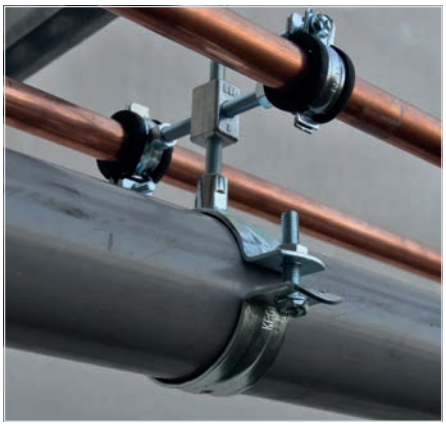

	Article number	Outer Ø OD mm	Pipe size Inch	NB/DN mm	Rod size RS M	Width W mm	Thick-ness T mm	Static load F N	Approvals
●	577001	15 - 19	3/8"	10	M8, M10	30	2,5	2.000	–
●	577002	20 - 24	1/2"	15	M8, M10	30	2,5	2.000	–
●	577003	25 - 30	3/4"	20	M8, M10	30	2,5	2.000	FM, VdS
●	577004	31 - 35	1"	25	M8, M10	30	2,5	2.000	FM, VdS
●	577005	36 - 41	–	–	M8, M10	30	2,5	2.000	VdS
●	577006	40 - 45	1 1/4"	32	M8, M10	30	2,5	2.000	FM, VdS
●	577007	48 - 53	1 1/2"	40	M8, M10	30	2,5	2.000	FM, VdS
●	577008	54 - 59	–	–	M8, M10	30	2,5	2.000	VdS
●	577009	60 - 65	2"	50	M8, M10	30	2,5	2.000	FM, VdS
●	577010	61 - 72	–	–	M8, M10	30	2,5	3.500	VdS
●	577011	76 - 81	2 1/2"	65	M10, M12	30	3,0	3.500	FM, VdS
●	577013	88 - 94	3"	80	M10, M12	30	3,0	3.500	FM, VdS
●	577014	95 - 102	–	–	M10, M12	30	3,0	3.500	VdS
●	577015	102 - 108	–	–	M10, M12	30	3,0	3.500	VdS
●	577016	110 - 116	4"	100	M10, M12	30	3,0	3.500	FM, VdS
●	577018	124 - 129	–	–	M10, M12	30	3,0	5.000	VdS
●	577019	133 - 140	–	–	M10, M12	40	4,0	5.000	VdS
●	577020	140 - 146	5"	125	M12, M16	40	4,0	5.000	FM, VdS
●	577021	149 - 155	–	–	M12, M16	40	4,0	5.000	VdS
●	577022	159 - 165	–	–	M12, M16	40	4,0	5.000	VdS
●	577023	167 - 173	6"	150	M12, M16	40	4,0	5.000	FM, VdS
●	577024	176 - 182	–	–	M12, M16	40	4,0	8.500	–
●	577025	188 - 194	–	–	M12, M16	40	4,0	8.500	–
●	577026	199 - 205	–	–	M12, M16	40	4,0	8.500	–
●	577027	207 - 216	–	–	M12, M16	40	4,0	8.500	–
●	577028	219 - 226	8"	200	M12, M16	40	4,0	8.500	VdS
●	577029	227 - 236	–	–	M16, M20	40	4,0	10.000	–
●	577030	244 - 250	–	–	M16, M20	40	4,0	10.000	–
●	577031	251 - 261	–	–	M16, M20	40	4,0	10.000	–
●	577032	267 - 273	10"	250	M16, M20	40	4,0	10.000	VdS

● In stock ● Limited stock ● On request

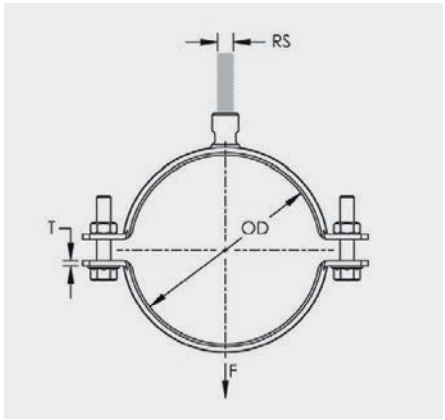

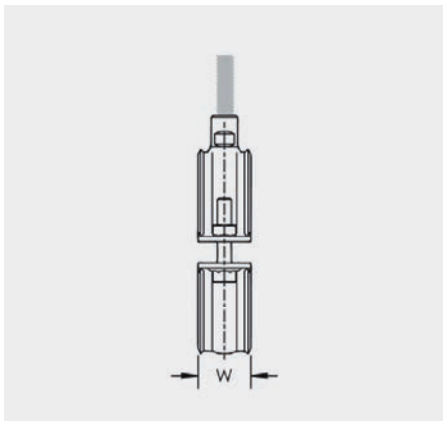

Installation

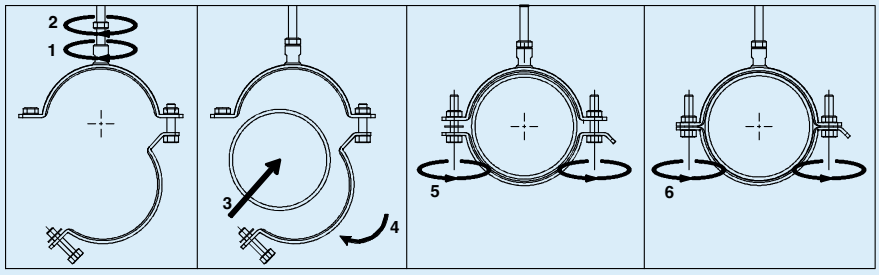

nVent CADDY | HD NI Heavy Duty Pipe Clamp, Fire/Sprinkler HDG

SPECIFICATIONS

- Fillet welded connector nut has flats to accommodate spanners.
- Flared steel band also suitable for plastic pipe.
- Easy open flange for pipe sizes up to and including 4".
- Nut Included: Yes
- Material: Steel
- Finish: Hot dip galvanized





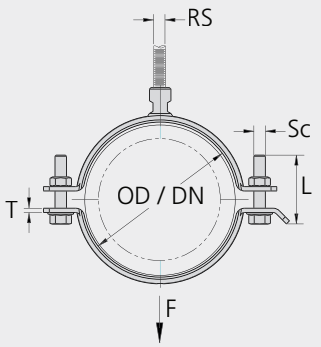

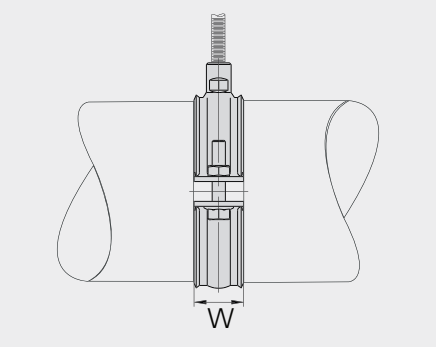



	Article number	Outer Ø OD mm	Pipe size Inch	NB/DN mm	Rod size RS M	Width W mm	Thickness T mm	Sc x T M x mm	Static load F N	Approvals	Nm FM/Vds
●	575001	15 - 19	³/₈"	10	M8 / M10	30	2,5	M6 x 30	2.000	-	
●	575002	20 - 24	¹/₂"	15	M8 / M10	30	2,5	M6 x 30	2.000	-	
●	575003	25 - 30	³/₄"	20	M8 / M10	30	2,5	M6 x 30	2.000	FM, VdS	
●	575004	31 - 35	1"	25	M8 / M10	30	2,5	M6 x 30	2.000	FM, VdS	
●	575006	40 - 45	1 ¹/₄"	32	M8 / M10	30	2,5	M6 x 30	2.000	FM, VdS	>10 Nm
●	575007	48 - 53	1 ¹/₂"	40	M8 / M10	30	2,5	M6 x 30	2.000	FM, VdS	
●	575008	54 - 59	–	–	M8 / M10	30	2,5	M8 x 40	2.000	FM, VdS	
●	575009	60 - 65	2"	50	M8 / M10	30	2,5	M8 x 40	2.000	FM, VdS	
●	575011	76 - 81	2 ¹/₂"	65	M10 / M12	30	3,0	M8 x 40	3.500	FM, VdS	>17 Nm
●	575013	88 - 94	3"	80	M10 / M12	30	3,0	M8 x 40	3.500	FM, VdS	
●	575016	110 - 116	4"	100	M10 / M12	30	3,0	M8 x 40	3.500	FM, VdS	
●	575018	124 - 129	–	–	M10 / M12	30	3,0	M8 x 40	5.000	FM, VdS	
●	575020	140 - 146	5"	125	M12 / M16	40	4,0	M10 x 40	5.000	FM, VdS	
●	575022	159 - 165	–	–	M12 / M16	40	4,0	M10 x 40	5.000	FM, VdS	>25 Nm
●	575023	167 - 173	6"	150	M12 / M16	40	4,0	M10 x 40	5.000	FM, VdS	
●	575028	219 - 226	8"	200	M12 / M16	40	4,0	M10 x 40	8.500	VdS	
●	575032	267 - 273	10"	250	M16 / M20	40	4,0	M12 x 40	10.000	VdS	

● In stock ● Limited stock ● On request

Installation

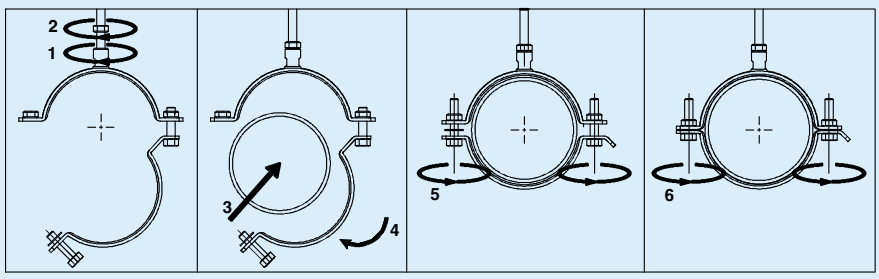

nVent CADDY | HD Heavy Duty Pipe Clamp

SPECIFICATIONS

- Fillet welded connector nut has flats to accommodate spanners.
- Easy open flange for pipe sizes less than 4".
- Category II noise reduction according to DIN EN ISO 3822-1.
- Compliant for sound insulation design according to DIN 4109.
- Reaction-to-fire classification is "E" in compliance with DIN EN 13501-1.
- Color: Black
- Finish: Electro galvanized
- Material: Steel and EPDM-SBR Rubber
- Temperature: −50 to 110 °C



	Article number	Outer Ø OD mm	Pipe Size Inch	NB/DN mm	Rod Size RS M	Width W mm	Thick-ness T mm	Screw Ø Sc M	Screw Length L mm	Static Load F N
●	577033	14 - 18	3/8"	10	M8, M10	30	2,5	M6	30	2.000
●	577034	19 - 23	1/2"	15	M8, M10	30	2,5	M6	30	2.000
●	577035	24 - 28	3/4"	20	M8, M10	30	2,5	M6	30	2.000
●	577036	29 - 33	1"	25	M8, M10	30	2,5	M6	30	2.000
●	577037	33 - 37	–	–	M8, M10	30	2,5	M6	30	2.000
●	577038	40 - 45	1 1/4"	32	M8, M10	30	2,5	M6	30	2.000
●	577039	47 - 52	1 1/2"	40	M8, M10	30	2,5	M6	30	2.000
●	577040	53 - 58	–	–	M8, M10	30	2,5	M6	30	2.000
●	577041	60 - 65	2"	50	M8, M10	30	2,5	M8	40	2.000
●	577043	73 - 78	2 1/2"	65	M10, M12	30	3,0	M8	40	3.500
●	577045	88 - 93	3"	80	M10, M12	30	3,0	M8	40	3.500
●	577048	108 - 116	4"	100	M10, M12	30	3,0	M8	40	3.500
●	577050	124 - 129	–	–	M10, M12	40	4,0	M8	40	3.500
●	577051	131 - 137	–	–	M12, M16	40	4,0	M10	40	5.000
●	577052	138 - 145	5"	125	M12, M16	40	4,0	M10	40	5.000
●	577053	148 - 154	–	–	M12, M16	40	4,0	M10	40	5.000
●	577054	156 - 162	–	–	M12, M16	40	4,0	M10	40	5.000
●	577055	165 - 171	6"	150	M12, M16	40	4,0	M10	40	5.000
●	577057	188 - 194	–	–	M12, M16	40	4,0	M10	40	5.000
●	577058	196 - 203	–	–	M12, M16	40	4,0	M10	40	5.000
●	577059	205 - 214	–	–	M12, M16	40	4,0	M10	40	5.000
●	577061	219 - 225	8"	200	M16, M20	40	4,0	M12	40	7.000
●	577064	244 - 250	–	–	M16, M20	40	4,0	M12	40	10.000
●	577066	265 - 273	10"	250	M16, M20	40	4,0	M12	40	10.000
●	577067	305 - 316	–	–	M16, M20	40	4,0	M12	40	10.000

● In stock ● Limited stock ● On request



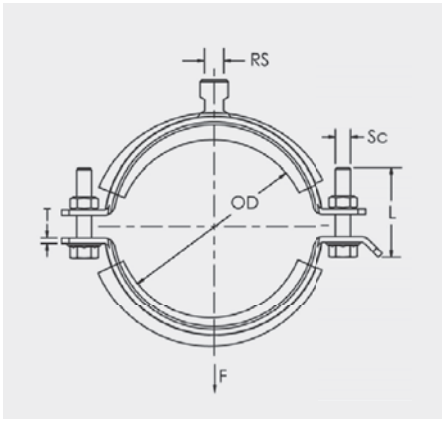

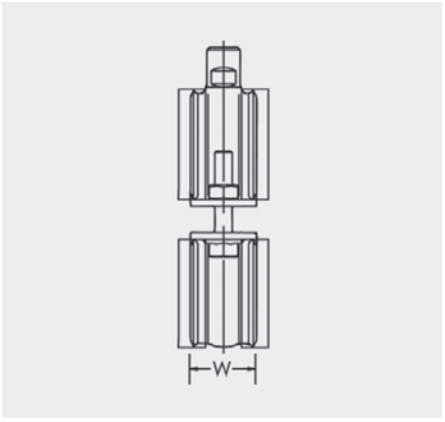

| + 31 10 522 33 51 | info@eurostrut.com | eurostrut.com

SPECIFICATIONS

- Includes easy closing mechanism.
- Combo head bolt works with slotted, hex, or Phillips drivers.
- Category II noise reduction according to DIN EN ISO 3822-1.
- Compliant for sound insulation design according to DIN 4109.
- Reaction-to-fire classification is "E" in compliance with DIN EN 13501-1.
- Material: Steel
- Finish: Electro-galvanized



	Article number	Outer Ø OD mm	Pipe Size Inch	NB/DN mm	Rod Size RS M	Width W mm	Thick-ness T mm	Screw Ø Sc M	Screw Length L mm	Static Load F N
●	400055	12 – 14	1/4"	8	M8	20	1.5	M6	25	1000
●	400056	15 – 19	3/8"	10	M8	20	1.5	M6	25	1000
●	400057	21 – 23	1/2"	15	M8	20	1.5	M6	25	1000
●	400058	26 – 28	3/4"	20	M8	20	1.5	M6	25	1000
●	400059	32 – 35	1"	25	M8	20	1.5	M6	30	1000
●	400060	40 – 43	1 1/4"	32	M8	20	1.5	M6	30	1000
●	400061	44 – 49	-	-	M8	20	1.5	M6	30	1300
●	400062	48 – 52	1 1/2"	40	M8	20	1.5	M6	30	1300
●	589310	54 – 58	-	-	M8	20	2	M6	30	1300
●	589320	57 – 61	2"	50	M8	20	2	M6	30	1300



	Article number	Outer Ø OD mm	Pipe Size Inch	NB/DN mm	Rod Size RS M	Width W mm	Thick-ness T mm	Screw Ø Sc M	Screw Length L mm	Static Load F N
●	400063	12 – 14	1/4"	8	M8, M10	20	1.5	M6	25	1000
●	400064	15 – 19	3/8"	10	M8, M10	20	1.5	M6	25	1000
●	400065	21 – 23	1/2"	15	M8, M10	20	1.5	M6	25	1000
●	400066	26 – 28	3/4"	20	M8, M10	20	1.5	M6	25	1000
●	400067	32 – 35	1"	25	M8, M10	20	1.5	M6	30	1000
●	400068	40 – 43	1 1/4"	32	M8, M10	20	1.5	M6	30	1000
●	400069	44 – 49			M8, M10	20	1.5	M6	30	1300
●	400070	48 – 52	1 1/2"	40	M8, M10	20	1.5	M6	30	1300
●	589350	54 – 58			M8, M10	20	2	M6	30	1300
●	400071	57 – 61	2"	50	M8, M10	20	2	M6	30	1300
●	400072	63 – 67			M8, M10	20	2	M6	30	1300
●	400073	70 – 73			M8, M10	20	2	M6	35	1300
●	400074	74 – 80	2 1/2"	65	M8, M10	20	2	M6	35	1300
●	400075	83 – 91	3"	80	M8, M10	20	2	M6	35	1300
●	400076	101 – 106			M8, M10	23	2.5	M6	35	2200
●	400077	108 – 114	4"	100	M8, M10	23	2.5	M6	40	2200

● In stock ● Limited stock ● On request

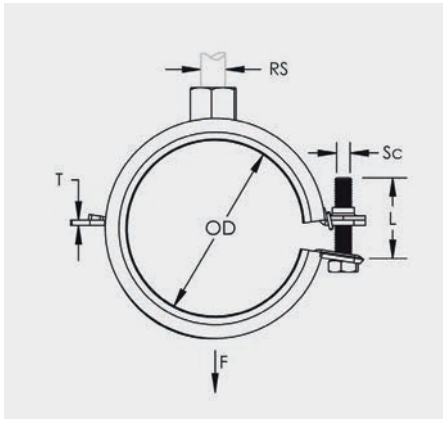

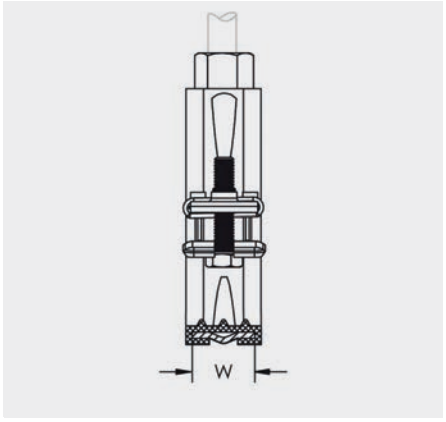

nVent CADDY | PX NI Heavy Duty Pipe Clamp with External Thread

SPECIFICATIONS

- Includes male/female combination nut.
- Heavy duty.



	Article number	Outer Ø OD mm	Pipe Size Inch		Gewinde G Inch	Rod Size RS M	Width W mm	Thick-ness T mm	Screw Ø Sc M	Screw Length L mm	Static Load F N
	Material: Steel | Finish: Electro-galvanized										
●	577060	21 – 25	1/2"	15	1/2"	M10	27	2.2	M6	20	2500
●	577070	26 – 31	3/4"	20	1/2"	M10	27	2.2	M6	20	2500
●	577080	32 – 36	1"	25	1/2"	M10	27	2.2	M6	20	2500
●	577100	41 – 46	1 1/4"	32	1/2"	M10	27	2.2	M6	20	2500
●	577110	47 – 52	1 1/2"	40	1/2"	M10	27	2.2	M6	25	2500
●	577130	59 – 63	2"	50	1/2"	M10	27	2.2	M6	25	2500
●	577150	70 – 73	-	-	1/2"	M10	27	2.2	M6	25	2500
●	577160	74 – 79	2 1/2"	65	1/2"	M10	31	2.5	M6	25	2500
●	577180	87 – 92	3"	80	1/2"	M10	31	2.5	M6	25	2500
●	577220	112 – 117	4"	100	1/2"	M10	31	2.5	M6	25	2500
●	577300	164 – 169	6"	150	3/4"	M12	38	2.9	M8	30	3500
●	577400	246 – 252	-	-	3/4"	M12	38	2.9	M8	30	3500
	Material: Stainless steel 316										
●	577460	21 – 25	1/2"	15	1/2"	M10	27	2	M6	20	2500
●	577470	26 – 31	3/4"	20	1/2"	M10	27	2	M6	20	2500
●	577480	32 – 36	1"	25	1/2"	M10	27	2	M6	20	2500
●	577500	41 – 46	1 1/4"	32	1/2"	M10	27	2	M6	20	2500
●	577510	47 – 52	1 1/2"	40	1/2"	M10	27	2	M6	20	2500
●	577530	59 – 63	2"	50	1/2"	M10	27	2	M6	20	2500
●	577560	74 – 79	2 1/2"	65	1/2"	M10	31	2	M8	25	2500
●	577580	87 – 92	3"	80	1/2"	M10	31	2	M8	25	2500
●	577600	100 – 105	3 1/2"	-	1/2"	M10	31	2	M8	25	2500
●	577620	112 – 117	4"	100	1/2"	M10	31	2	M8	25	2500
●	577660	137 – 143	5"	125	3/4"	M12	38	2.5	M8	30	3500
●	577690	157 – 163	-	-	3/4"	M12	38	2.5	M8	30	3500
●	577700	164 – 169	6"	150	3/4"	M12	38	2.5	M8	30	3500
●	577710	170 – 175	-	-	3/4"	M12	38	2.5	M8	30	3500
●	577720	176 – 182	-	-	3/4"	M12	38	2.5	M8	30	3500
●	577750	199 – 205	-	-	3/4"	M12	38	2.5	M8	30	3500
●	577770	213 – 219	8"	200	3/4"	M12	38	2.5	M8	30	3500
●	577800	246 – 252	-	-	3/4"	M12	38	2.5	M8	30	3500

● In stock ● Limited stock ● On request

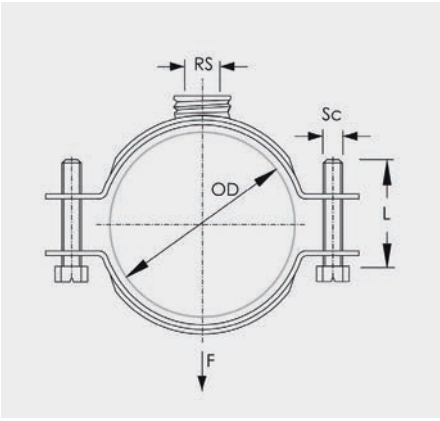

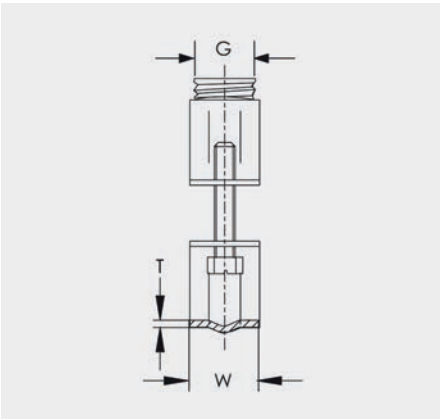

| + 31 10 522 33 51 | info@eurostrut.com | eurostrut.com

nVent CADDY | PX Heavy Duty Pipe Clamp with External Thread

SPECIFICATIONS

- Includes male/female combination nut.
- Category II noise reduction according to DIN EN ISO 3822-1.
- Compliant for sound insulation design according to DIN 4109.
- Reaction-to-fire classification is "E" in compliance with DIN EN 13501-1.



	Article number	Outer Ø OD mm	Pipe Size Inch		Gewinde G Inch	Rod Size RS M	Width W mm	Thick-ness T mm	Screw Ø Sc M	Screw Length L mm	Static Load F N
	Material: Steel | Finish: Electro-galvanized										
●	577870	14 – 18	3/8"	10	1/2"	M10	27	2.3	M6	20	2500
●	577880	19 – 22	1/2"	15	1/2"	M10	27	2.3	M6	20	2500
●	577890	23 – 28	3/4"	20	1/2"	M10	27	2.3	M6	20	2500
●	577900	29 – 34	1"	25	1/2"	M10	27	2.3	M6	20	2500
●	577920	41 – 45	1 1/4"	32	1/2"	M10	27	2.3	M6	20	2500
●	577930	46 – 50	1 1/2"	40	1/2"	M10	27	2.3	M6	20	2500
●	577950	56 – 61	2"	50	1/2"	M10	31	2.5	M8	25	2500
●	577980	75 – 81	2 1/2"	65	1/2"	M10	31	2.5	M8	25	2500
●	578000	88 – 93	3"	80	1/2"	M10	31	2.5	M8	25	2500
●	578040	112 – 118	4"	100	1/2"	M10	31	2.5	M8	25	2500
●	578080	139 – 145	5"	125	3/4"	M12	38	2.9	M8	30	3500
●	578120	165 – 170	6"	150	3/4"	M12	38	2.9	M8	30	3500
●	578180	215 – 220	8"	200	3/4"	M12	38	2.9	M8	30	3500
	Material: Stainless steel 316										
●	578250	10 – 13	-	-	1/2"	M10	27	2 mm	M6	20	2500
●	578260	14 – 18	3/8"	10	1/2"	M10	27	2 mm	M6	20	2500
●	578270	19 – 22	1/2"	15	1/2"	M10	27	2 mm	M6	20	2500
●	578280	23 – 28	3/4"	20	1/2"	M10	27	2 mm	M6	20	2500
●	578290	29 – 34	1"	25	1/2"	M10	27	2 mm	M6	20	2500
●	578310	41 – 45	1 1/4"	32	1/2"	M10	27	2 mm	M6	20	2500
●	578320	46 – 50	1 1/2"	40	1/2"	M10	27	2 mm	M6	20	2500
●	578340	56 – 61	2"	50	1/2"	M10	31	2 mm	M8	25	2500
●	578370	75 – 81	2 1/2"	65	1/2"	M10	31	2 mm	M8	25	2500
●	578390	88 – 93	3"	80	1/2"	M10	31	2 mm	M8	25	2500
●	578400	94 – 99	-	-	1/2"	M10	31	2 mm	M8	25	2500
●	578410	100 – 105	3 1/2"		1/2"	M10	31	2 mm	M8	25	2500
●	578420	106 – 111	-	-	1/2"	M10	31	2 mm	M8	25	2500
●	578430	112 – 118	4"	100	1/2"	M10	31	2 mm	M8	25	2500
●	578440	119 – 125	-	-	3/4"	M12	38	2.5	M8	30	3500
●	578470	139 – 145	5"	125	3/4"	M12	38	2.5	M8	30	3500
●	578480	146 – 151	-	-	3/4"	M12	38	2.5	M8	30	3500
●	578500	158 – 164	-	-	3/4"	M12	38	2.5	M8	30	3500
●	578510	165 – 170	6"	150	3/4"	M12	38	2.5	M8	30	3500
●	578540	188 – 194	-	-	3/4"	M12	38	2.5	M8	30	3500
●	578570	215 – 220	8"	200	3/4"	M12	38	2.5	M8	30	3500

● In stock ● Limited stock ● On request



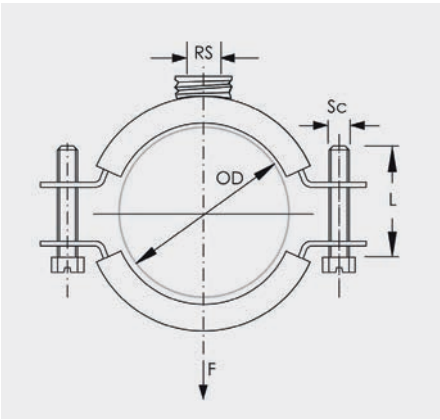

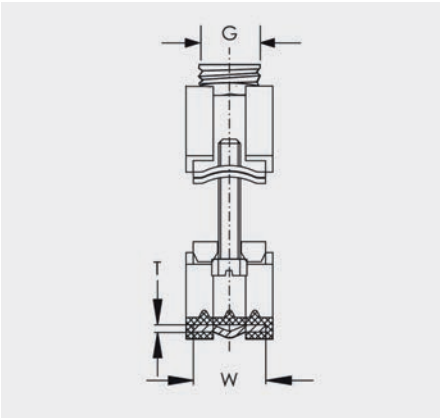

SPECIFICATIONS

- Plastic washer prevents screws from falling out during installation.
- Combo head bolt works with slotted, hex, or Phillips drivers.
- Longer ears position the screw farther from the hanger, improving tool clearance when the screw is tightened.
- Combination nut can be attached to M8 or M10 threaded rod, simplifying material handling.
- Screw length has been optimized to accommodate an increased pipe range, reducing inventory.
- Finish: Electro galvanized
- Material: Steel



	Article number	Outer Ø OD mm	Pipe Size Inch	NB/DN mm	Rod Size RS M	Width W mm	Thick-ness T mm	Screw Ø Sc M	Screw Length L mm	Static Load F N
●	586101	15 – 19	3/8"	10	M8, M10	20	1	M6	17	1000 N
●	586102	19 – 23	1/2"	15	M8, M10	20	1	M6	17	1000 N
●	586103	23 – 29	3/4"	20	M8, M10	20	1	M6	17	1000 N
●	586104	29 – 35	1"	25	M8, M10	20	1	M6	17	1000 N
●	586105	35 – 41	-	-	M8, M10	20	1	M6	22	1000 N
●	586106	41 – 48	1 1/4"	32	M8, M10	20	1	M6	22	1000 N
●	586107	48 – 54	1 1/2"	40	M8, M10	20	1.25	M6	22	1500 N
●	586108	54 – 62	2"	50	M8, M10	20	1.25	M6	22	1500 N
●	586109	62 – 72	-	-	M8, M10	20	1.25	M6	22	1500 N
●	586110	73 – 83	2 1/2"	65	M8, M10	23	1.5	M6	27	2000 N
●	586111	83 – 93	3"	80	M8, M10	23	1.5	M6	27	2000 N
●	586112	93 – 103	3 1/2"	90	M8, M10	23	1.75	M6	27	2500 N
●	586113	103 – 113	-	-	M8, M10	23	1.75	M6	27	2500 N
●	586114	113 – 123	4"	100	M8, M10	23	1.75	M6	27	2500 N
●	586115	123 – 133	-	-	M8, M10	23	2	M6	27	3000 N
●	586116	133 – 143	5"	125	M8, M10	23	2	M6	27	3000 N
●	586117	143 – 153	-	-	M8, M10	25	2	M6	27	3200 N
●	586118	155 – 165	-	-	M8, M10	25	2	M6	27	3200 N
●	586119	165 – 175	6"	150	M8, M10	25	2	M6	27	3200 N
●	586120	195 – 205	-	-	M8, M10	27	2.25	M6	32	3600 N
●	586121	210 – 220	8"	200	M8, M10	27	2.25	M6	32	3600 N
●	586122	220 – 230	-	-	M8, M10	27	2.25	M6	32	3600 N
●	586123	244 – 255	-	-	M8, M10	30	2.5	M6	32	4000 N
●	586124	270 – 280	10"	250	M8, M10	30	2.5	M6	32	4000 N
●	586125	314 – 324	12"	300	M8, M10	30	2.5	M6	32	4000 N

● In stock ● Limited stock ● On request

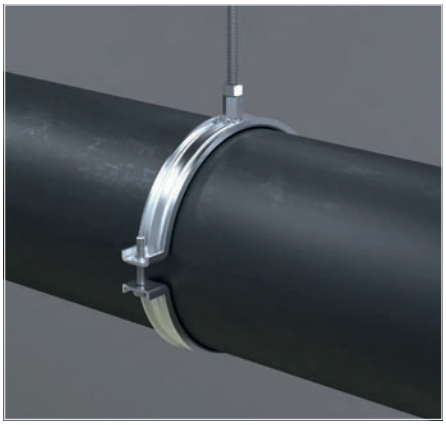

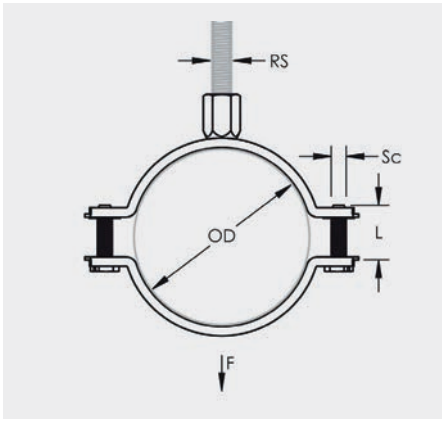

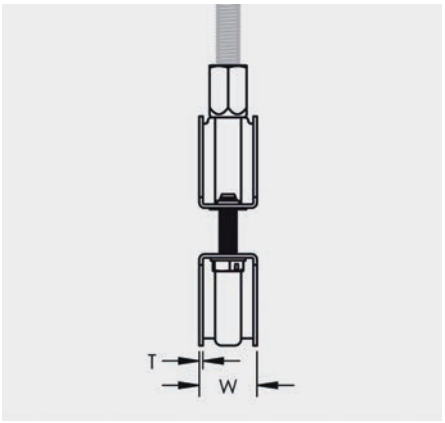

nVent CADDY | Macrofix Non-Insulated M8/M10 SS

SPECIFICATIONS

- Plastic washer prevents screws from falling out during installation.
- Combo head bolt works with slotted, hex, or Phillips drivers.
- Longer ears position the screw farther from the hanger, improving tool clearance when the screw is tightened.
- Combination nut can be attached to M8 or M10 threaded rod, simplifying material handling.
- Screw length has been optimized to accommodate an increased pipe range, reducing inventory.
- Finish: Electropolished
- Material: Stainless Steel 316L (EN 1.4404)



	Article number	Outer Ø OD mm	Pipe Size Inch	NB/DN mm	Rod Size RS M	Width W mm	Thick-ness T mm	Screw Ø Sc M	Screw Length L mm	Static Load F N
●	586401	15 – 19	3/8"	10	M8, M10	20	1	M6	17	900
●	586402	19 – 23	1/2"	15	M8, M10	20	1	M6	17	900
●	586403	23 – 29	3/4"	20	M8, M10	20	1	M6	17	900
●	586404	29 – 35	1"	25	M8, M10	20	1	M6	17	900
●	586405	35 – 41	-	-	M8, M10	20	1	M6	22	900
●	586406	41 – 48	1 1/4"	32	M8, M10	20	1	M6	22	900
●	586407	48 – 54	1 1/2"	40	M8, M10	20	1.25	M6	22	1000
●	586408	54 – 62	2"	50	M8, M10	20	1.25	M6	22	1000
●	586409	62 – 72	-	-	M8, M10	20	1.25	M6	22	1000
●	586410	73 – 83	2 1/2"	65	M8, M10	23	1.5	M6	27	2000
●	586411	83 – 93	3"	80	M8, M10	23	1.5	M6	27	2000
●	586412	93 – 103	3 1/2"	90	M8, M10	23	1.75	M6	27	2500
●	586413	103 – 113	-	-	M8, M10	23	1.75	M6	27	2500
●	586414	113 – 123	4"	100	M8, M10	23	1.75	M6	27	2500
●	586415	123 – 133	-	-	M8, M10	23	2	M6	27	3000
●	586416	133 – 143	5"	125	M8, M10	23	2	M6	27	3000
●	586417	143 – 153	-	-	M8, M10	25	2	M6	27	3200
●	586418	155 – 165	-	-	M8, M10	25	2	M6	27	3200
●	586419	165 – 175	6"	150	M8, M10	25	2	M6	27	3200
●	586420	195 – 205	-	-	M8, M10	27	2.25	M6	32	3600
●	586421	210 – 220	8"	200	M8, M10	27	2.25	M6	32	3600
●	586422	220 – 230	-	-	M8, M10	27	2.25	M6	32	3600

● In stock ● Limited stock ● On request

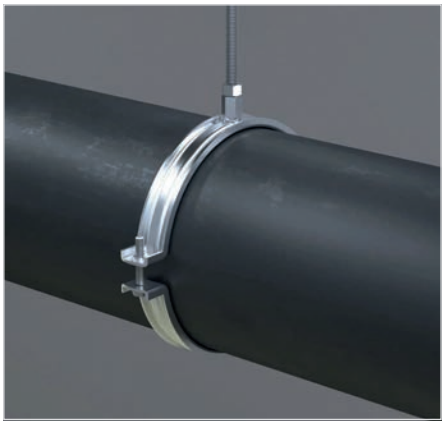

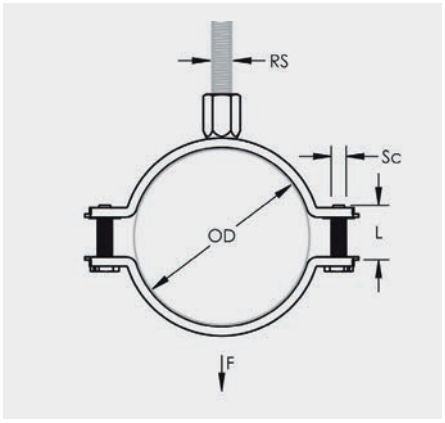

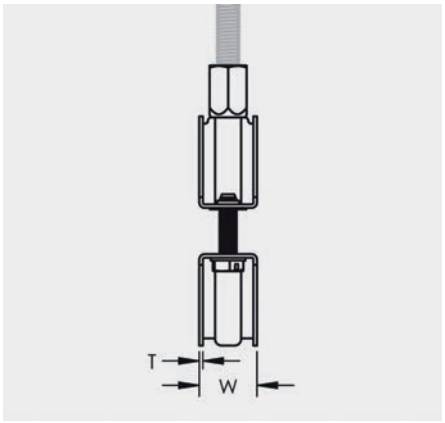

SPECIFICATIONS

- Return-lip on the hanger prevents the rubber from detaching, eliminating rework during installation.
- Plastic washer prevents screws from falling out during installation.
- Combo head bolt works with slotted, hex, or Phillips drivers.
- Longer ears position the screw farther from the hanger, improving tool clearance when the screw is tightened.
- Screw length has been optimized to accommodate an increased pipe range, reducing inventory.
- Category II noise reduction according to DIN EN ISO 3822-1.
- Compliant for sound insulation design according to DIN 4109.
- Reaction-to-fire classification is "E" in compliance with DIN EN 13501-1.
- Finish: Electro galvanized
- Material: EPDM-SBR Rubber and Steel
- Temperature: −50 to 110 °C



	Article number	Outer Ø OD mm	Pipe Size Inch	NB/DN mm	Rod Size RS M	Width W mm	Thick-ness T mm	Screw Ø Sc M	Screw Length L mm	Static Load F N
●	586201	11 – 15	1/4"	8	M8	20	1	M6	17	1000
●	586202	15 – 19	3/8"	10	M8	20	1	M6	17	1000
●	586203	19 – 25	1/2"	15	M8	20	1	M6	22	1000
●	586204	25 – 31	3/4"	20	M8	20	1	M6	22	1000
●	586205	31 – 37	1"	25	M8	20	1	M6	22	1000
●	586206	37 – 44	1 1/4"	32	M8	20	1	M6	27	1000
●	586207	44 – 50	1 1/2"	40	M8	20	1.25	M6	27	1500
●	586208	50 – 58	-	-	M8	20	1.25	M6	27	1500
●	586209	58 – 68	2"	50	M8	20	1.25	M6	32	1500

● In stock ● Limited stock ● On request



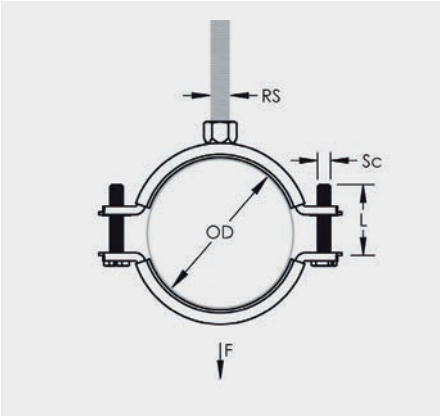

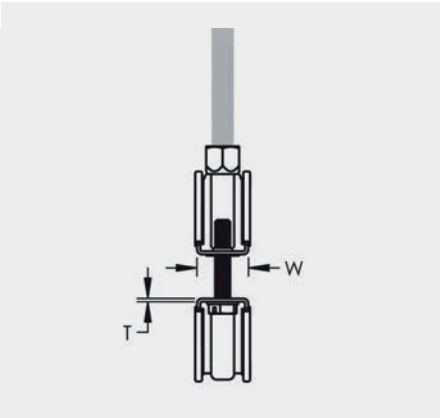

nVent CADDY | Macrofix Insulated Ventilation Duct Clamp

SPECIFICATIONS

- Complete hanger assembly comes out of the box ready to install (sizes up to 600 mm).
- Increased opening angle easily accommodates all standard-sized spiral ducts (sizes up to 600 mm).
- Quick locking system prevents the hanger from accidently opening when duct is moved or adjusted (sizes up to 600 mm).
- Quick locking system easily closes with one hand (sizes up to 600 mm).
- Thread impression retains quick locking captive screw and prevents it from falling out during installation.
- Return-lip on the hanger prevents the rubber from detaching, eliminating rework during installation.
- Combo head bolt works with slotted, hex, or Phillips drivers.
- Longer ears position the screw farther from the hanger, improving tool clearance when the screw is tightened.
- Combination nut can be attached to M8 or M10 threaded rod, simplifying material handling.
- Category II noise reduction according to DIN EN ISO 3822-1.
- Compliant for sound insulation design according to DIN 4109.
- Reaction-to-fire classification is "E" in compliance with DIN EN 13501-1.
- Finish: Electro galvanized
- Material: EPDM-SBR Rubber and Steel
- Temperature: −50 to 110 °C





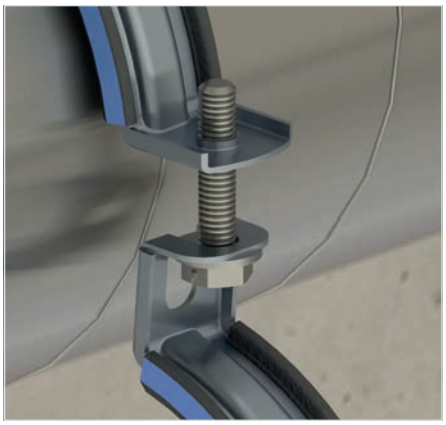

	Article number	Outer Ø OD mm	Rod Size RS M	Width W mm	Thick-ness T mm	Screw Ø Sc M	Screw Length L mm	Angle a Deg	Static Load F N
●	586601	80 mm	M8, M10	20	1	M6	27 mm	80 °	775
●	586603	100 mm	M8, M10	20	1	M6	27 mm	80 °	775
●	586604	112 mm	M8, M10	20	1	M6	27 mm	80 °	775
●	586605	125 mm	M8, M10	20	1	M6	27 mm	80 °	775
●	586606	140 mm	M8, M10	20	1	M6	40 mm	80 °	775
●	586607	150 mm	M8, M10	20	1	M6	40 mm	80 °	775
●	586608	160 mm	M8, M10	20	1	M6	40 mm	80 °	775
●	586609	180 mm	M8, M10	20	1	M6	40 mm	80 °	775
●	586610	200 mm	M8, M10	20	1	M6	40 mm	80 °	775
●	586611	224 mm	M8, M10	21	1.25	M6	40 mm	80 °	1000
●	586612	250 mm	M8, M10	21	1.25	M6	40 mm	80 °	1000
●	586613	280 mm	M8, M10	21	1.25	M6	40 mm	80 °	1000
●	586614	300 mm	M8, M10	21	1.25	M6	40 mm	80 °	1000
●	586615	315 mm	M8, M10	21	1.25	M6	40 mm	80 °	1000
●	586616	355 mm	M8, M10	21	1.25	M6	40 mm	80 °	1000
●	586617	400 mm	M8, M10	21	1.25	M6	40 mm	80 °	1000
●	586618	450 mm	M8, M10	21	1.5	M6	40 mm	80 °	1400
●	586619	500 mm	M8, M10	21	1.5	M6	40 mm	80 °	1400
●	586620	560 mm	M8, M10	21	1.5	M6	40 mm	80 °	1400
●	586621	600 mm	M8, M10	21	1.5	M6	40 mm	80 °	1400
●	586622	630 mm	M8, M10	23	1.75	M6	40 mm		1900
●	586623	710 mm	M8, M10	23	1.75	M6	40 mm		1900
●	586624	800 mm	M8, M10	23	1.75	M6	40 mm		1900
●	586625	900 mm	M8, M10	23	1.75	M6	40 mm		1900
●	586626	1000 mm	M8, M10	23	2	M6	40 mm		2200
●	586627	1120 mm	M8, M10	23	2	M6	40 mm		2200
●	586628	1250 mm	M8, M10	23	2	M6	40 mm		2200

● In stock ● Limited stock ● On request

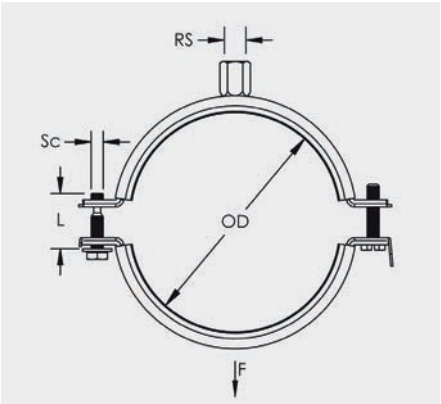

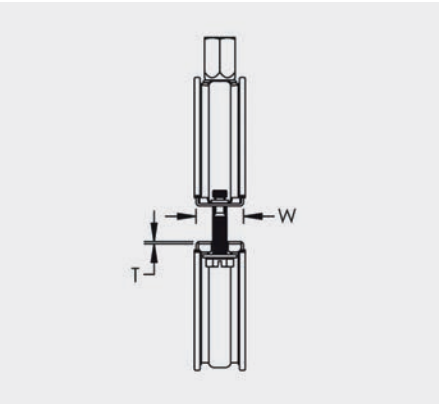



SPECIFICATIONS

- Return-lip on the hanger prevents the rubber from detaching, eliminating rework during installation.
- Plastic washer prevents screws from falling out during installation.
- Combo head bolt works with slotted, hex, or Phillips drivers.
- Longer ears position the screw farther from the hanger, improving tool clearance when the screw is tightened.
- Combination nut can be attached to M8 or M10 threaded rod, simplifying material handling.
- Screw length has been optimized to accommodate an increased pipe range, reducing inventory.
- Category II noise reduction according to DIN EN ISO 3822-1.
- Compliant for sound insulation design according to DIN 4109.
- Reaction-to-fire classification is "E" in compliance with DIN EN 13501-1.
- Color: Black
- Finish: Electro galvanized
- Material: Steel and EPDM-SBR Rubber
- Temperature: −50 to 110 °C



	Article number	Outer Ø OD mm	Pipe Size Inch	NB/DN mm	Rod Size RS M	Width W mm	Thick-ness T mm	Screw Ø Sc M	Screw Length L mm	Static Load F N
●	586001	11 – 15	1/4"	8	M8, M10	20	1 mm	M6	17	1000
●	586002	15 – 19	3/8"	10	M8, M10	20	1 mm	M6	17	1000
●	586003	19 – 25	1/2"	15	M8, M10	20	1 mm	M6	22	1000
●	586004	25 – 31	3/4"	20	M8, M10	20	1 mm	M6	22	1000
●	586005	31 – 37	1"	25	M8, M10	20	1 mm	M6	22	1000
●	586006	37 – 44	1 1/4"	32	M8, M10	20	1 mm	M6	27	1000
●	586007	44 – 50	1 1/2"	40	M8, M10	20	1.25	M6	27	1500
●	586008	50 – 58	-	-	M8, M10	20	1.25	M6	27	1500
●	586009	58 – 68	2"	50	M8, M10	20	1.25	M6	32	1500
●	586010	68 – 78	2 1/2"	65	M8, M10	23	1.5	M6	32	2000
●	586011	78 – 88			M8, M10	23	1.5	M6	32	2000
●	586012	88 – 98	3"	80	M8, M10	23	1.75	M6	37	2500
●	586013	98 – 108	3 1/2"	90	M8, M10	23	1.75	M6	37	2500
●	586014	108 – 118	4"	100	M8, M10	23	1.75	M6	37	2500
●	586015	118 – 128	-	-	M8, M10	23	2 mm	M6	37	3000
●	586016	128 – 138	-	-	M8, M10	23	2 mm	M6	37	3000
●	586017	138 – 148	5"	125	M8, M10	25	2 mm	M6	37	3200
●	586018	150 – 160	-	-	M8, M10	25	2 mm	M6	37	3200
●	586019	160 – 170	6"	150	M8, M10	25	2 mm	M6	37	3200
●	586020	190 – 200	-	-	M8, M10	27	2.25	M6	37	3600
●	586021	205 – 215	-	-	M8, M10	27	2.25	M6	37	3600
●	586022	215 – 225	8"	200	M8, M10	27	2.25	M6	37	3600
●	586023	239 – 250	-	-	M8, M10	30	2.5	M6	37	4000
●	586024	265 – 275	10"	250	M8, M10	30	2.5	M6	37	4000
●	586025	309 – 319	-	-	M8, M10	30	2.5	M6	37	4000

● In stock ● Limited stock ● On request



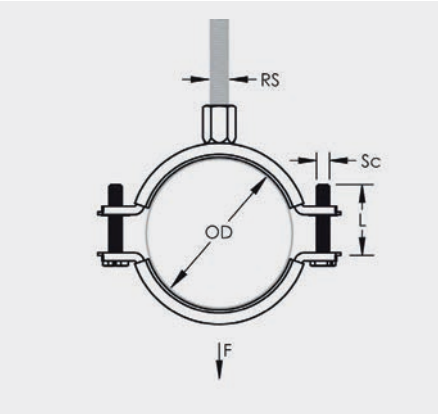

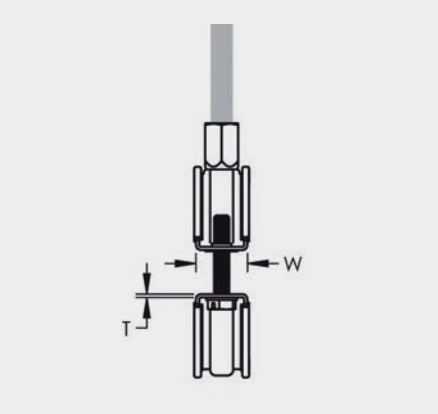

SPECIFICATIONS

- Return-lip on the hanger prevents the rubber from detaching, eliminating rework during installation.
- Plastic washer prevents screws from falling out during installation.
- Combo head bolt works with slotted, hex, or Phillips drivers.
- Longer ears position the screw farther from the hanger, improving tool clearance when the screw is tightened.
- Combination nut can be attached to M8 or M10 threaded rod, simplifying material handling.
- Screw length has been optimized to accommodate an increased pipe range, reducing inventory.
- Category II noise reduction according to DIN EN ISO 3822-1.
- Compliant for sound insulation design according to DIN 4109.
- Reaction-to-fire classification is "E" in compliance with DIN EN 13501-1.
- Color: Black
- Finish: Electro polished
- Material: EPDM-SBR Rubber and Stainless Steel 316L (EN 1.4404)
- Temperature–50 to 110 °C



	Article number	Outer Ø OD mm	Pipe Size Inch	NB/DN mm	Rod Size RS M	Width W mm	Thick-ness T mm	Screw Ø Sc M	Screw Length L mm	Static Load F N
●	586301	11 – 15	1/4"	8	M8, M10	20	1	M6	17	700
●	586302	15 – 19	3/8"	10	M8, M10	20	1	M6	17	700
●	586303	19 – 25	1/2"	15	M8, M10	20	1	M6	22	700
●	586304	25 – 31	3/4"	20	M8, M10	20	1	M6	22	700
●	586305	31 – 37	1"	25	M8, M10	20	1	M6	22	700
●	586306	37 – 44	1 1/4"	32	M8, M10	20	1	M6	27	700
●	586307	44 – 50	1 1/2"	40	M8, M10	20	1.25	M6	27	700
●	586308	50 – 58	-	-	M8, M10	20	1.25	M6	27	700
●	586309	58 – 68	2"	50	M8, M10	20	1.25	M6	32	700
●	586310	68 – 78	2 1/2"	65	M8, M10	23	1.5	M6	32	700
●	586311	78 – 88	-	-	M8, M10	23	1.5	M6	32	700
●	586312	88 – 98	3"	80	M8, M10	23	1.75	M6	37	1700
●	586313	98 – 108	3 1/2"	90	M8, M10	23	1.75	M6	37	1700
●	586314	108 – 118	4"	100	M8, M10	23	1.75	M6	37	1700
●	586315	118 – 128	-	-	M8, M10	23	2	M6	37	1700
●	586316	128 – 138	-	-	M8, M10	23	2	M6	37	1700
●	586317	138 – 148	5"	125	M8, M10	25	2	M6	37	2600
●	586318	150 – 160	-	-	M8, M10	25	2	M6	37	2600
●	586319	160 – 170	6"	-	M8, M10	25	2	M6	37	2600
●	586320	190 – 200	-	-	M8, M10	27	2.25	M6	37	3600
●	586321	205 – 215	-	-	M8, M10	27	2.25	M6	37	3600
●	586322	215 – 225	8"	200	M8, M10	27	2.25	M6	37	3600

● In stock ● Limited stock ● On request



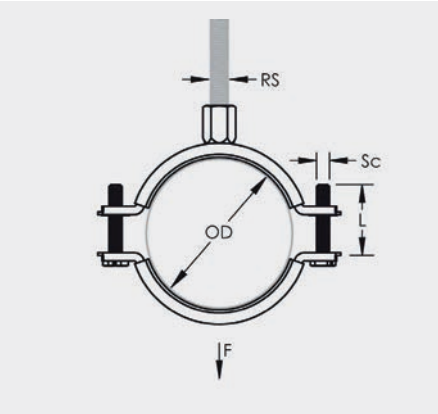

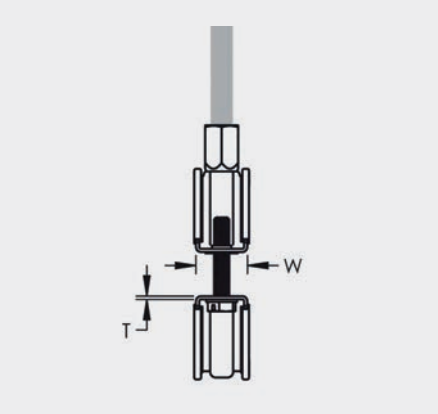

SPECIFICATIONS

- Increased opening angle easily accommodates all standard-sized pipes.
- Quick locking system prevents the hanger from accidently opening when pipe is moved or adjusted.
- Quick locking system easily closes with one hand.
- Thread impression retains quick locking captive screw and prevents it from falling out during installation.
- Combo head bolt works with slotted, hex, or Phillips drivers.
- Longer ears position the screw farther from the hanger, improving tool clearance when the screw is tightened.
- Combination nut can be attached to M8 or M10 threaded rod, simplifying material handling.
- Screw length has been optimized to accommodate an increased pipe range, reducing inventory.
- Finish: Electro galvanized
- Material: Steel





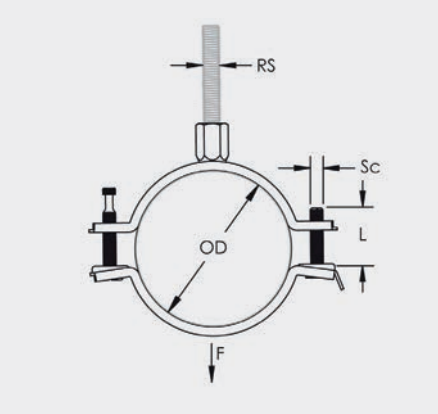

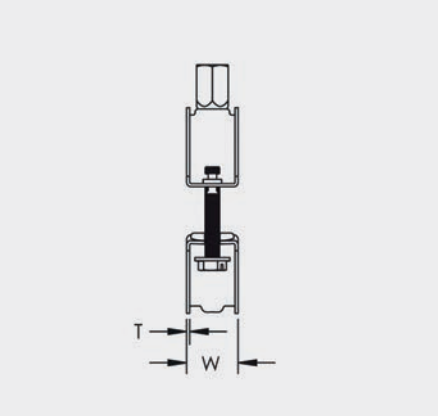

	Article number	Outer Ø OD mm	Rod Size RS M	Pipe Size mm	NB/DN mm	Width W mm	Thick-ness T mm	Screw Ø Sc M	Screw Length L mm	Static Load F N
●	586801	15 – 19	M8, M10	3/8"	10	20	1	M6	27	1000
●	586802	19 – 23	M8, M10	1/2"	15	20	1	M6	27	1000
●	586803	23 – 29	M8, M10	3/4"	20	20	1	M6	32	1000
●	586804	29 – 35	M8, M10	1"	25	20	1	M6	32	1000
●	586805	35 – 41	M8, M10	-	-	20	1	M6	32	1000
●	586806	41 – 48	M8, M10	1 1/4"	32	20	1	M6	32	1000
●	586807	49 – 55	M8, M10	1 1/2"	40	21	1.25	M6	32	1500
●	586808	54 – 62	M8, M10	2"	50	21	1.25	M6	32	1500
●	586809	62 – 72	M8, M10	-	-	21	1.25	M6	37	1500
●	586810	73 – 83	M8, M10	2 1/2"	65	23	1.5	M6	37	2000
●	586811	83 – 93	M8, M10	3"	80	23	1.5	M6	37	2000
●	586812	93 – 103	M8, M10	3 1/2"	90	23	1.75	M6	37	2500
●	586813	103 – 113	M8, M10	-	-	23	1.75	M6	37	2500
●	586814	113 – 123	M8, M10	4"	100	23	1.75	M6	37	2500
●	586815	123 – 133	M8, M10	-	-	23	2	M6	40	3000
●	586816	133 – 143	M8, M10	5"	125	23	2	M6	40	3000
●	586817	143 – 153	M8, M10	-	-	25	2	M6	40	3200
●	586818	155 – 165	M8, M10	-	-	25	2	M6	40	3200
●	586819	165 – 175	M8, M10	6"	150	25	2	M6	40	3200
●	586820	195 – 205	M8, M10	-	-	27	2.25	M6	40	3600
●	586821	210 – 220	M8, M10	8"	200	27	2.25	M6	40	3600

● In stock ● Limited stock ● On request

SPECIFICATIONS

- Increased opening angle easily accommodates all standard-sized pipes.
- Quick locking system prevents the hanger from accidently opening when pipe is moved or adjusted.
- Quick locking system easily closes with one hand.
- Return-lip on the hanger prevents the rubber from detaching, eliminating rework during installation.
- Thread impression retains quick locking captive screw and prevents it from falling out during installation.
- Combo head bolt works with slotted, hex, or Phillips drivers.
- Longer ears position the screw farther from the hanger, improving tool clearance when the screw is tightened.
- Combination nut can be attached to M8 or M10 threaded rod, simplifying material handling.
- Screw length has been optimized to accommodate an increased pipe range, reducing inventory.
- Category II noise reduction according to DIN EN ISO 3822-1.
- Compliant for sound insulation design according to DIN 4109.
- Reaction-to-fire classification is "E" in compliance with DIN EN 13501-1.
- Color: Black
- Finish: Electro galvanized
- Material: Steel and EPDM-SBR Rubber
- Temperature: −50 to 110 °C



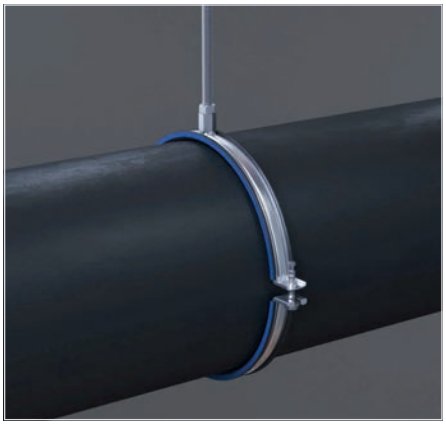

	Article number	Outer Ø OD mm	Rod Size RS M	Pipe Size mm	NB/DN mm	Width W mm	Thick-ness T mm	Screw Ø Sc M	Screw Length L mm	Static Load F N
●	586701	11 – 15	M8, M10	1/4"	8	20	1	M6	27	1000
●	586702	15 – 19	M8, M10	3/8"	10	20	1	M6	27	1000
●	586703	19 – 25	M8, M10	1/2"	15	20	1	M6	32	1000
●	586704	25 – 31	M8, M10	3/4"	20	20	1	M6	32	1000
●	586705	31 – 37	M8, M10	1"	25	20	1	M6	32	1000
●	586706	37 – 44	M8, M10	1 1/4"	32	20	1	M6	37	1000
●	586707	45 – 51	M8, M10	1 1/2"	40	21	1.25	M6	37	1500
●	586708	50 – 58	M8, M10	-	-	21	1.25	M6	37	1500
●	586709	58 – 68	M8, M10	2"	50	21	1.25	M6	40	1500
●	586710	68 – 78	M8, M10	2 1/2"	65	23	1.5	M6	40	2000
●	586711	78 – 88	M8, M10	-	-	23	1.5	M6	40	2000
●	586712	88 – 98	M8, M10	3"	80	23	1.75	M6	45	2500
●	586713	98 – 108	M8, M10	3 1/2"	90	23	1.75	M6	45	2500
●	586714	108 – 118	M8, M10	4"	100	23	1.75	M6	50	2500
●	586715	118 – 128	M8, M10	-	-	23	2	M6	50	3000
●	586716	128 – 138	M8, M10	-	-	23	2	M6	50	3000
●	586717	138 – 148	M8, M10	5"	125	25	2	M6	50	3200
●	586718	150 – 160	M8, M10	-	-	25	2	M6	50	3200
●	586719	160 – 170	M8, M10	6"	150	25	2	M6	50	3200
●	586720	190 – 200	M8, M10	-	-	27	2.25	M6	50	3600
●	586721	205 – 215	M8, M10	-	-	27	2.25	M6	50	3600

● In stock ● Limited stock ● On request

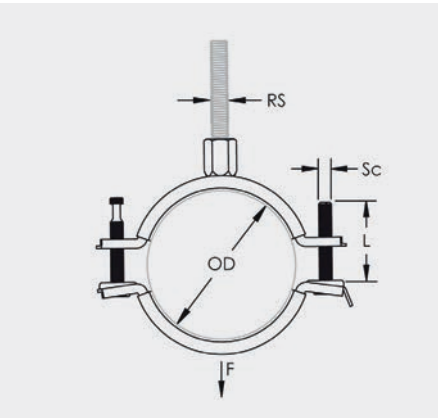

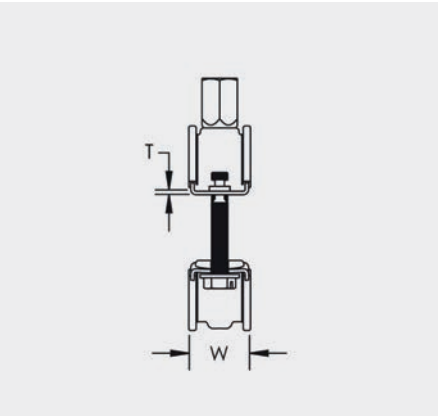

nVent CADDY | Macrofix Plus NI EZ with Easy Closure

SPECIFICATIONS

- Contains easy closing mechanism.
- Plastic washers help prevent crushing the CPVC or plastic pipe and assure a floating fit.
- Flared edges and specially designed welding area help protect CPVC piping.
- Ideal for installations where space is limited and require services to be ran close to the attachment surface.
- Suitable for 3/4" - 2" (20 - 50 DN) steel sprinkler pipe.
- Eliminates the need to seismically brace when drops are kept within 6" (150 mm) of the attachment surface.
- Combo head bolt works with slotted, hex, or Phillips drivers.
- Conforms with Manufacturers Standardization Society (MSS) SP-58 (Type 12).
- Finish: Electro galvanized
- Material: Steel



	Article number	Pipe Size mm	NB/DN mm	Outer Ø OD mm	Rod Size RS M	Width W mm	Thick-ness T mm	Static Load F N	Certifications
●	595052	1/2"	15	20 – 21.3	M10	30	1.5	1125	AON Fire Protection
●	595053	3/4"	20	25 – 26.9	M10	30	1.5	1125	AON Fire Protection, FM
●	595054	1"	25	32 – 33.7	M10	30	1.5	1125	AON Fire Protection, FM
●	595056	1 1/4"	32	40 – 42.4	M10	30	1.5	1125	AON Fire Protection, FM
●	595057	1 1/2"	40	48.3 – 50	M10	30	2	1725	AON Fire Protection, FM
●	595059	2"	50	60.3 – 63	M10	30	2	1725	AON Fire Protection, FM
●	595061	2 1/2"	65	75 – 76.1	M10	30	2	1725	
●	595062	3"	80	88.9 – 90	M10	30	2	1725	

● In stock ● Limited stock ● On request





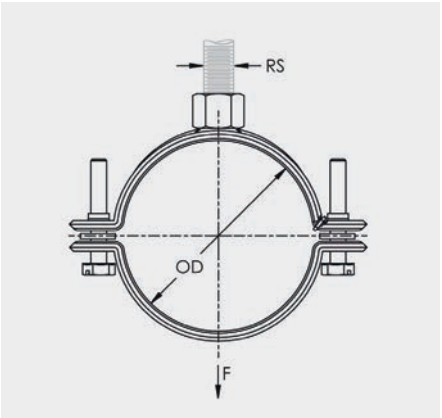

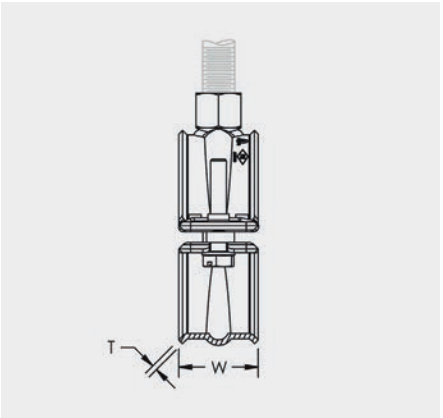

| + 31 10 522 33 51 | info@eurostrut.com | eurostrut.com

nVent CADDY | Macrofix Plus Kombi with Combination Nut

SPECIFICATIONS

- Includes easy closing mechanism.
- Age-resistant lining.
- Category II noise reduction according to DIN EN ISO 3822-1.
- Compliant for sound insulation design according to DIN 4109.
- Reaction-to-fire classification is "E" in compliance with DIN EN 13501-1.
- Material: Steel
- Finish: Electro-galvanized





	Article number	Outer Ø OD mm	Pipe Size Inch	NB/DN mm	Width W mm	Thick-ness T mm	Screw Ø Sc M	Screw Length L mm	Static Load F N
●	401903	26 – 28	3/4"	20	20	1.5	M6	20	1000
●	401904	32 – 35	1"	25	20	1.5	M6	20	1000
●	401905	40 – 43	1 1/4"	32	20	1.5	M6	20	1000
●	401906	44 – 49	-	-	20	2	M6	20	1300
●	401907	48 – 52	1 1/2"	40	20	2	M6	25	1300
●	401908	57 – 61	2"	50	20	2	M6	25	1300
●	401911	74 – 80	2 1/2"	65	20	2	M6	25	1300
●	401912	83 – 91	3"	80	20	2	M6	25	1300
●	401914	108 – 114	4"	100	23	2.5	M8	25	2200
●	401918	136 – 139	5"	125	23	2.5	M8	25	2200
●	401920	159 – 163	-	-	23	2.5	M8	30	2200
●	401921	165 – 169	6"	150	23	2.5	M8	30	2200
●	401922	193 – 200	-	-	25	3	M8	30	2500

● In stock ● Limited stock ● On request

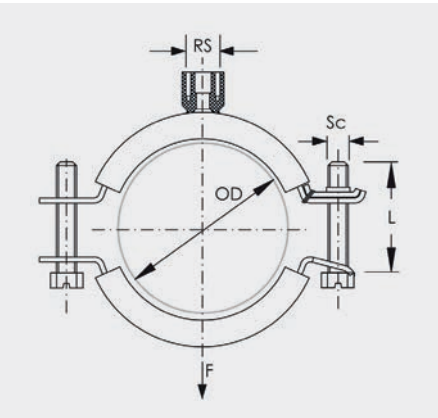

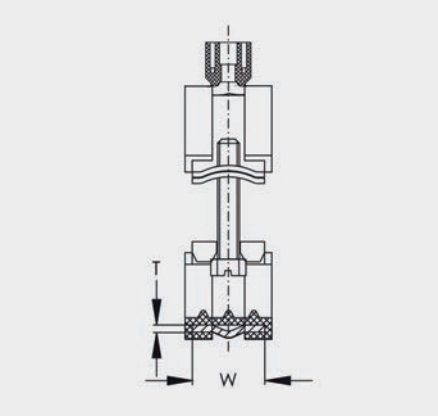

ES101 | Eurostrut | Half Piece Pipe Clamp

SPECIFICATIONS

- Surface finish:
  - Plain oil (POF)
  - Hot dip galvanized (HDG)
  - Stainless steel 304 (SS304)
  - Stainless steel 316 (SS316)
- Other dimensions and finishes available on request.

ORDERING NOTES

- ES101 is a half piece pipe clamp, a complete pipe clamp consists of 2 half pieces.
- Pipe clamps will be supplied without bolts and nuts.
- Surface finish needs to be specified upon ordering.



Available surface finishes	Change HDG to	Stock
Hot dip galvanized	-	●
Stainless steel A4 / 316L	SS316	●
Stainless steel A2 / 304	SS304	●
Plain oil	POF	●

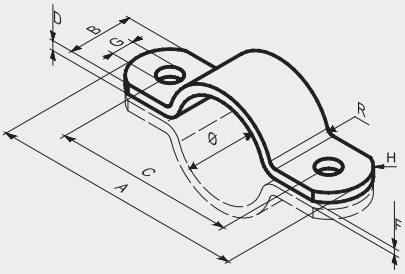

	Article number	Ø mm	Ø inch	Ø DN	A mm	BxD mm	C mm	F mm	G mm	H mm	R mm	kg/ unit	Bolt size
●	ES101/10HDG	10			61	25 x 3	36	3	9	18	4	-	M8x25
●	ES101/12HDG	12			63	25 x 3	38	3	9	18	4	0.03	M8x25
●	ES101/16HDG	16			68	25 x 3	43	3	9	18	4	0.04	M8x25
●	ES101/18HDG	18	3/8"	10	72	25 x 3	47	3	9	18	4	0.04	M8x25
●	ES101/20HDG	20			75	25 x 3	50	3	9	18	4	0.04	M8x25
●	ES101/22HDG	22	1/2"	15	80	25 x 3	55	3	9	18	4	0.04	M8x25
●	ES101/25HDG	25			88	30 x 4	58	4	11	18	5	0.08	M10x30
●	ES101/27HDG	27	3/4"	20	92	30 x 4	62	4	11	18	5	0.08	M10x30
●	ES101/30HDG	30			93	30 x 4	63	4	11	18	5	0.08	M10x30
●	ES101/32HDG	32			95	30 x 4	65	4	11	18	5	0.09	M10x30
●	ES101/34HDG	34	1"	25	98	30 x 4	68	4	11	18	5	0.09	M10x30
●	ES101/38HDG	38			104	30 x 4	74	4	11	18	5	0.09	M10x30
●	ES101/42HDG	42	1 1/4"	32	126	40 x 6	86	5	14	22	6	0.23	M12x40
●	ES101/45HDG	45			132	40 x 6	92	5	14	22	6	0.24	M12x40
●	ES101/48HDG	48	1 1/2"	40	135	40 x 6	95	5	14	22	6	0.25	M12x40
●	ES101/54HDG	54			140	40 x 6	100	5	14	22	6	0.27	M12x40
●	ES101/57HDG	57			145	40 x 6	105	5	14	22	6	0.28	M12x40
●	ES101/60HDG	60	2"	50	150	40 x 6	110	5	14	22	6	0.29	M12x40
●	ES101/63HDG	63			153	40 x 6	113	5	14	22	6	0.29	M12x40
●	ES101/66HDG	66			155	40 x 6	115	5	14	22	6	0.31	M12x40
●	ES101/70HDG	70			162	40 x 6	122	5	14	22	6	0.32	M12x40
●	ES101/76HDG	76	2 1/2"	65	165	40 x 6	125	5	14	22	6	0.34	M12x40
●	ES101/80HDG	80			172	40 x 6	132	5	14	22	6	0.36	M12x40
●	ES101/83HDG	83			175	40 x 6	135	5	14	22	6	0.36	M12x40
●	ES101/89HDG	89	3"	80	180	40 x 6	140	5	14	22	6	0.37	M12x40
●	ES101/95HDG	95			185	40 x 6	145	5	14	22	6	0.39	M12x40
●	ES101/102HDG	102	3 1/2"	90	200	40 x 8	160	5	14	38	10	0.56	M12x40
●	ES101/108HDG	108			210	40 x 8	170	5	14	38	10	0.58	M12x40
●	ES101/114HDG	114	4"	100	215	40 x 8	175	5	14	38	10	0.63	M12x40
●	ES101/120HDG	120			220	40 x 8	180	5	14	38	10	0.65	M12x40
●	ES101/127HDG	127			225	40 x 8	185	5	14	38	10	0.67	M12x40

	Article number	Ø mm	Ø inch	Ø DN	A mm	BxD mm	C mm	F mm	G mm	H mm	R mm	kg/ unit	Bolt size
●	ES101/133HDG	133			255	50 x 10	205	6	18	60	15	1.13	M16x50
●	ES101/140HDG	140	5"	125	260	50 x 10	210	6	18	60	15	1.16	M16x50
●	ES101/146HDG	146			266	50 x 10	216	6	18	60	15	1.19	M16x50
●	ES101/152HDG	152			272	50 x 10	222	6	18	60	15	1.22	M16x50
●	ES101/159HDG	159			285	50 x 10	235	6	18	60	15	1.29	M16x50
●	ES101/165HDG	165			290	50 x 10	240	6	18	60	15	1.36	M16x50
●	ES101/168HDG	168	6"	150	293	50 x 12	243	6	18	60	15	1.59	M16x50
●	ES101/174HDG	174			300	50 x 12	250	6	18	60	15	1.6	M16x50
●	ES101/178HDG	178			304	50 x 12	254	6	18	60	15	1.68	M16x50
●	ES101/191HDG	191			320	50 x 12	270	6	18	60	15	1.82	M16x50
●	ES101/194HDG	194	7"	175	326	50 x 12	276	6	18	60	15	1.85	M16x50
●	ES101/200HDG	200			332	50 x 12	282	6	18	60	15	-	M16x50
●	ES101/203HDG	203			335	50 x 12	285	6	18	60	15	1.87	M16x50
●	ES101/216HDG	216			344	50 x 12	294	6	18	60	15	1.92	M16x50
●	ES101/219HDG	219	8"	200	356	50 x 12	306	6	18	60	15	1.98	M16x50
●	ES101/226HDG	226			362	50 x 12	312	6	18	60	15	2	M16x50
●	ES101/230HDG	230			366	50 x 12	316	6	0	60	15	-	M16x50
●	ES101/241HDG	241			370	50 x 12	320	6	22	60	15	2.05	M20x60
●	ES101/245HDG	245			376	50 x 12	326	6	22	60	15	2.12	M20x60
●	ES101/253HDG	253			385	50 x 12	335	6	22	60	15	2.18	M20x60
●	ES101/267HDG	267			400	50 x 12	350	6	22	60	15	2.37	M20x60
●	ES101/273HDG	273	10"	250	410	50 x 12	360	6	22	60	15	2.38	M20x60
●	ES101/300HDG	300			430	50 x 12	380	6	22	60	15	2.57	M20x60
●	ES101/318HDG	318			470	60 x 12	410	8	22	60	15	3.17	M20x60
●	ES101/324HDG	324	12"	300	480	60 x 12	420	8	22	60	15	3.29	M20x60
●	ES101/356HDG	356	14"	350	515	60 x 12	455	8	22	60	15	3.56	M20x60
●	ES101/368HDG	368			545	75 x 12	470	12	22	60	15	4.76	M20x60
●	ES101/406HDG	406	16"	400	585	75 x 12	510	12	22	60	15	5.24	M20x60
●	ES101/420HDG	420			600	75 x 12	525	12	22	60	15	5.26	M20x60
●	ES101/457HDG	457	18"	450	637	75 x 12	562	12	22	60	15	5.83	M20x60
●	ES101/508HDG	508	20"	500	688	75 x 12	613	12	22	60	15	6.33	M20x60
●	ES101/520HDG	520			700	75 x 12	625	12	22	60	15	6.48	M20x60
●	ES101/559HDG	559	22"	550	737	75 x 12	662	12	22	60	15	7.08	M20x60
●	ES101/610HDG	610	24"	600	795	75 x 12	720	12	22	60	15	7.84	M20x60
●	ES101/660HDG	660	26"	650	845	75 x 12	770	12	22	60	15	8.38	M20x60
●	ES101/710HDG	710	28"	700	895	75 x 12	820	12	22	60	15	8.91	M20x60
●	ES101/762HDG	762	30"	750	947	75 x 12	872	12	22	60	15	9.47	M20x60
●	ES101/813HDG	813	32"	800	998	75 x 12	923	12	22	60	15	9.84	M20x60
●	ES101/914HDG	914	36"	900	1099	75 x 12	1024	15	27	60	22	16.7	M24x70
●	ES101/1016HDG	1016	40"	1000	1201	75 x 12	1126	15	27	60	22	18.3	M24x70

● In stock ● Limited stock ● On request

ES102 | Eurostrut | One Piece Pipe Clamp

SPECIFICATIONS

- Surface finish:
  - Plain oil (POF)
  - Hot dip galvanized (HDG)
  - Stainless steel 304 (SS304)
  - Stainless steel 316 (SS316)
- Other dimensions and finishes available on request.

ORDERING NOTES

- Pipe clamps will be supplied without bolts and nuts.
- Surface finish needs to be specified upon ordering.



Available surface finishes	Change HDG to	Stock
Hot dip galvanized	-	
Stainless steel A4 / 316L	SS316	
Stainless steel A2 / 304	SS304	
Plain oil	POF	

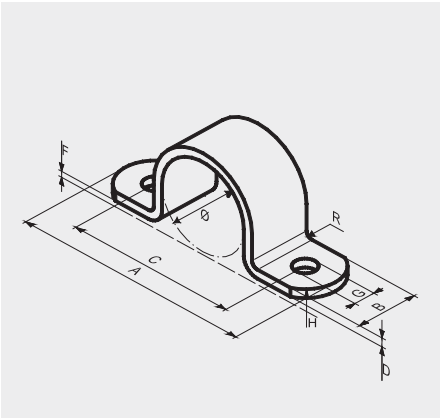

	Article number	Ø mm	Ø inch	Ø DN	A mm	BxD mm	C mm	F mm	G mm	H mm	R mm	kg/ unit	Bolt size
●	ES102/12HDG	12			63	25 x 3	38	3	9	18	4	0.04	M8x25
●	ES102/16HDG	16			68	25 x 3	43	3	9	18	4	0.04	M8x25
●	ES102/18HDG	18	3/8	10	72	25 x 3	47	3	9	18	4	0.05	M8x25
●	ES102/20HDG	20			75	25 x 3	50	3	9	18	4	0.06	M8x25
●	ES102/22HDG	22	1/2	15	80	25 x 3	55	3	9	18	4	0.06	M8x25
●	ES102/25HDG	25			88	30 x 4	58	4	11	18	5	0.09	M10x30
●	ES102/27HDG	27	3/4	20	92	30 x 4	62	4	11	18	5	0.1	M10x30
●	ES102/30HDG	30			93	30 x 4	63	4	11	18	5	0.11	M10x30
●	ES102/32HDG	32			95	30 x 4	65	4	11	18	5	0.11	M10x30
●	ES102/34HDG	34	1	25	98	30 x 4	68	4	11	18	5	0.11	M10x30
●	ES102/38HDG	38			104	30 x 4	74	4	11	18	5	0.13	M10x30
●	ES102/42HDG	42	1 1/4	32	126	40 x 6	86	5	14	22	6	0.29	M12x40
●	ES102/45HDG	45			132	40 x 6	92	5	14	22	6	0.31	M12x40
●	ES102/48HDG	48	1 1/2	40	135	40 x 6	95	5	14	22	6	0.34	M12x40
●	ES102/54HDG	54			140	40 x 6	100	5	14	22	6	0.34	M12x40
●	ES102/57HDG	57			145	40 x 6	105	5	14	22	6	0.35	M12x40
●	ES102/60HDG	60	2	50	150	40 x 6	110	5	14	22	6	0.39	M12x40
●	ES102/63HDG	63			153	40 x 6	113	5	14	22	6	0.42	M12x40
●	ES102/66HDG	66			155	40 x 6	115	5	14	22	6	0.41	M12x40
●	ES102/70HDG	70			162	40 x 6	122	5	14	22	6	0.55	M12x40
●	ES102/76HDG	76	2 1/2	65	165	40 x 6	125	5	14	22	6	0.46	M12x40
●	ES102/80HDG	80			172	40 x 6	132	5	14	22	6	0.47	M12x40
●	ES102/83HDG	83			175	40 x 6	135	5	14	22	6	0.51	M12x40
●	ES102/89HDG	89	3	80	180	40 x 6	140	5	14	22	6	0.51	M12x40
●	ES102/95HDG	95			185	40 x 6	145	5	14	22	6	0.52	M12x40
●	ES102/102HDG	102	3 1/2	90	200	40 x 8	160	5	14	38	10	0.77	M12x40
●	ES102/108HDG	108			201	40 x 8	170	5	14	38	10	0.89	M12x40
●	ES102/114HDG	114	4	100	215	40 x 8	175	5	14	38	10	0.93	M12x40
●	ES102/120HDG	120			220	40 x 8	180	5	14	38	10	0.91	M12x40
●	ES102/127HDG	127			225	40 x 8	185	5	14	38	10	1.1	M12x40

	Article number	Ø mm	Ø inch	Ø DN	A mm	BxD mm	C mm	F mm	G mm	H mm	R mm	kg/ unit	Bolt size
●	ES102/133HDG	133			255	50 x 10	205	6	18	60	12	1.8	M16x50
●	ES102/140HDG	140	5	125	260	50 x 10	210	6	18	60	12	1.78	M16x50
●	ES102/146HDG	146			266	50 x 10	216	6	18	60	12	1.82	M16x50
●	ES102/152HDG	152			272	50 x 10	222	6	18	60	12	1.9	M16x50
●	ES102/159HDG	159			285	50 x 10	235	6	18	60	12	1.88	M16x50
●	ES102/165HDG	165			290	50 x 10	240	6	18	60	12	2	M16x50
●	ES102/168HDG	168	6	150	293	50 x 12	243	6	18	60	12	2.4	M16x50
●	ES102/174HDG	174			300	50 x 12	250	6	18	60	12	2.8	M16x50
●	ES102/178HDG	178			304	50 x 12	254	6	18	60	12	2.95	M16x50
●	ES102/191HDG	191			320	50 x 12	270	6	18	60	12	3.15	M16x50
●	ES102/194HDG	194	7	175	326	50 x 12	276	6	18	60	12	3.25	M16x50
●	ES102/200HDG	200			332	50 x 12	282	6	18	60	12	-	M16x50
●	ES102/203HDG	203			335	50 x 12	285	6	18	60	12	2.9	M16x50
●	ES102/216HDG	216			344	50 x 12	294	6	18	60	12	-	M16x50
●	ES102/219HDG	219	8	200	356	50 x 12	306	6	18	60	12	3	M16x50
●	ES102/226HDG	226			362	50 x 12	312	6	18	60	12	3.4	M16x50
●	ES102/230HDG	230			366	50 x 12	316	6	18	60	12	-	M16x50
●	ES102/241HDG	241			370	50 x 12	320	6	22	60	12	3.9	M20x60
●	ES102/245HDG	245			376	50 x 12	326	6	22	60	12	4	M20x60
●	ES102/253HDG	253			385	50 x 12	335	6	22	60	12	-	M20x60
●	ES102/267HDG	267			400	50 x 12	350	6	22	60	12	4.3	M20x60
●	ES102/273HDG	273	10	250	410	50 x 12	360	6	22	60	12	4.4	M20x60
●	ES102/300HDG	300			430	50 x 12	380	6	22	60	12	4.6	M20x60
●	ES102/318HDG	318			470	60 x 12	410	8	22	60	12	5.8	M20x60
●	ES102/324HDG	324	12	300	480	60 x 12	420	8	22	60	12	5.33	M20x60
●	ES102/356HDG	356	14	350	515	60 x 12	455	8	22	60	12	5.84	M20x60
●	ES102/368HDG	368			545	75 x 12	470	12	22	60	22	8.5	M20x60
●	ES102/406HDG	406	16	400	585	75 x 12	510	12	22	60	22	8.21	M20x60
●	ES102/420HDG	420			600	75 x 12	525	12	22	60	22	9.8	M20x60
●	ES102/457HDG	457	18	450	637	75 x 12	562	12	22	60	22	-	M20x60
●	ES102/508HDG	508	20	500	688	75 x 12	613	12	22	60	22	-	M20x60
●	ES102/520HDG	520			690	75 x 12	615	12	22	60	22	10.38	M20x60
●	ES102/559HDG	559	22	550	737	75 x 12	662	12	22	60	22	-	M20x60
●	ES102/610HDG	610	24	600	795	75 x 12	720	12	22	60	22	-	M20x60
●	ES102/660HDG	660	26	650	845	75 x 12	770	12	22	60	22	-	M20x60
●	ES102/710HDG	710	28	700	895	75 x 12	820	12	22	60	22	-	M20x60
●	ES102/762HDG	762	30	750	947	75 x 12	872	12	22	60	22	-	M20x60
●	ES102/813HDG	813	32	800	998	75 x 12	923	12	22	60	22	-	M20x60
●	ES102/914HDG	914	36	900	1099	75 x 12	1024	15	22	60	22	-	M24x70
●	ES102/1016HDG	1016	40	1000	1201	75 x 12	1126	15	22	60	22	-	M24x70

● In stock ● Limited stock ● On request

ES147 | Eurostrut | One Piece Pipe Clamp (Stainless Steel)

SPECIFICATIONS

- Surface finish:
  - Stainless steel 304 (SS304)
  - Stainless steel 316 (SS316)
- Other dimensions and finishes available on request.

ORDERING NOTES

- Pipe clamps will be supplied without bolts and nuts.
- Surface finish needs to be specified upon ordering.



Available surface finishes	Change SS304 to	Stock
Stainless steel A4 / 316L	SS316	●
Stainless steel A2 / 304	-	●

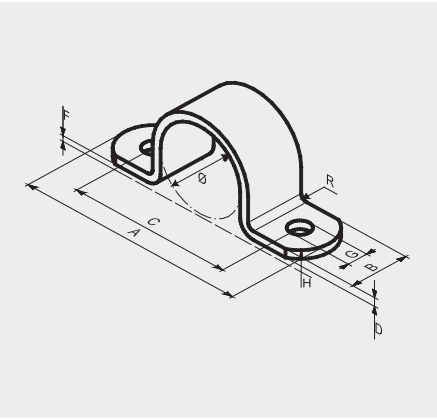

	Article number	Ø mm	Ø inch	Ø DN	A mm	BxD mm	C mm	F mm	G mm	H mm	R mm	kg/ unit	Bolt size
●	ES147/12SS304	12			63	25 x 3	39	3	7	20	3		M6
●	ES147/16SS304	16			67	25 x 3	43	3	7	20	3	0.07	M6
●	ES147/18SS304	18	3/8	10	69	25 x 3	45	3	7	20	3	0.07	M6
●	ES147/20SS304	20			71	25 x 3	47	3	7	20	3	0.07	M6
●	ES147/22SS304	22	1/2	15	73	25 x 3	49	3	7	20	3	0.08	M6
●	ES147/25SS304	25			76	25 x 3	52	3	7	20	3	0.08	M6
●	ES147/27SS304	27	3/4	20	78	25 x 3	54	3	7	20	3	0.08	M6
●	ES147/30SS304	30			81	25 x 3	57	3	7	20	3	0.08	M6
●	ES147/32SS304	32			83	25 x 3	59	3	7	20	3	0.09	M6
●	ES147/34SS304	34	1	25	85	25 x 3	61	3	7	20	3	0.09	M6
●	ES147/38SS304	38			89	25 x 3	65	3	7	20	3	0.09	M6
●	ES147/42SS304	42	1 1/4	32	102	30 x 3	74	3	9	25	4	0.13	M8
●	ES147/45SS304	45			105	30 x 3	77	3	9	25	4	0.13	M8
●	ES147/48SS304	48	1 1/2	40	108	30 x 3	80	3	9	25	4	0.14	M8
●	ES147/51SS304	51			112	30 x 3	83	3	9	25	4		M8
●	ES147/54SS304	54			114	30 x 3	86	3	9	25	4		M8
●	ES147/57SS304	57			117	30 x 3	89	3	9	25	4	0.15	M8
●	ES147/60SS304	60	2	50	120	30 x 3	92	3	9	25	4	0.16	M8
●	ES147/63SS304	63			123	30 x 3	95	3	9	25	4		M8
●	ES147/66SS304	66			126	30 x 3	98	3	9	25	4		M8
●	ES147/70SS304	70			138	40 x 4	110	4	10	30	4	0.32	M8
●	ES147/76SS304	76	2 1/2	65	144	40 x 4	116	4	10	30	4	0.35	M8
●	ES147/80SS304	80			148	40 x 4	120	4	10	30	4		M8
●	ES147/83SS304	83			151	40 x 4	123	4	10	30	4		M8
●	ES147/89SS304	89	3	80	157	40 x 4	129	4	10	30	4	0.39	M8
●	ES147/95SS304	95			163	40 x 4	135	4	10	30	4		M8
●	ES147/102SS304	102	3 1/2	90	170	40 x 4	142	4	10	30	4	0.55	M8
●	ES147/108SS304	108			176	40 x 4	148	4	10	30	4	0.58	M8
●	ES147/114SS304	114	4	100	182	40 x 4	154	4	10	30	4	0.6	M8
●	ES147/120SS304	120			188	40 x 4	160	4	10	30	4	0.65	M8
●	ES147/127SS304	127			195	40 x 4	167	4	10	30	4	0.7	M8

	Article number	Ø mm	Ø inch	Ø DN	A mm	BxD mm	C mm	F mm	G mm	H mm	R mm	kg/ unit	Bolt size
●	ES147/133SS304	133			218	50 x 5	182	5	12	40	5	0.82	M10
●	ES147/140SS304	140	5	125	225	50 x 5	189	5	12	40	5	0.86	M10
●	ES147/146SS304	146			231	50 x 5	195	5	12	40	5		M10
●	ES147/152SS304	152			237	50 x 5	201	5	12	40	5	1	M10
●	ES147/159SS304	159			244	50 x 5	208	5	12	40	5	1.05	M10
●	ES147/165SS304	165			250	50 x 5	214	5	12	40	5		M10
●	ES147/168SS304	168	6	150	253	50 x 5	217	5	12	40	5	1.1	M10
●	ES147/174SS304	174			259	50 x 5	223	5	12	40	5		M10
●	ES147/178SS304	178			263	50 x 5	227	5	12	40	5		M10
●	ES147/191SS304	191			276	50 x 5	240	5	12	40	5	1.16	M10
●	ES147/194SS304	194	7	175	279	50 x 5	243	5	12	40	5		M10
●	ES147/200SS304	200			285	50 x 5	249	5	12	40	5		M10
●	ES147/203SS304	203			288	50 x 5	252	5	12	40	5		M10
●	ES147/216SS304	216			301	50 x 5	265	5	12	40	5		M10
●	ES147/219SS304	219	8	200	304	50 x 5	268	5	12	40	5	1.34	M10
●	ES147/226SS304	226			311	50 x 5	275	5	12	40	5		M10
●	ES147/230SS304	230			315	50 x 5	279	5	12	40	5		M10
●	ES147/241SS304	241			341	50 x 5	301	5	14	40	8	1.78	M12
●	ES147/245SS304	245			345	50 x 5	305	5	14	40	8		M12
●	ES147/267SS304	267			367	50 x 5	327	5	14	40	8		M12
●	ES147/273SS304	273	10	250	373	50 x 5	333	5	14	40	8	2	M12
●	ES147/285SS304	285			385	50 x 5	345	5	14	40	8		M12
●	ES147/300SS304	300			400	50 x 5	360	5	14	40	8		M12
●	ES147/318SS304	318			418	50 x 5	378	5	14	40	8		M12
●	ES147/324SS304	324	12	300	424	50 x 5	384	5	14	40	8	2.2	M12
●	ES330/83SS304	330			0	50 x 5	0	5	14	40	8		M12
●	ES147/356SS304	356	14	350	456	50 x 5	416	5	14	40	8		M12
●	ES147/368SS304	368			468	50 x 5	428	5	14	40	8	2.5	M12
●	ES147/406SS304	406	16	400	506	50 x 5	466	5	14	40	8	2.8	M12
●	ES147/420SS304	420			520	50 x 5	480	5	14	40	8		M12
●	ES147/457SS304	457	18	450	557	50 x 5	517	5	14	40	8	3.1	M12
●	ES147/508SS304	508	20	500	608	50 x 5	568	5	14	40	8		M12
●	ES147/520SS304	520			620	50 x 5	580	5	14	40	8	3.3	M12
●	ES147/610SS304	610	24	600	710	50 x 5	670	5	14	40	8	3.9	M12
●	ES147/660SS304	660	26	650	760	50 x 5	720	5	14	40	8		M12
●	ES147/710SS304	710	28	700	810	50 x 5	770	5	14	40	8		M12
●	ES147/762SS304	762	30	750	862	50 x 5	822	5	14	40	8		M12
●	ES147/813SS304	813	32	800	913	50 x 5	873	5	14	40	8		M12
●	ES147/914SS304	914	36	900	1014	50 x 5	974	5	14	40	8		M12
●	ES147/1016SS304	1016	40	1000	1116	50 x 5	1076	5	14	40	8		M12

● In stock ● Limited stock ● On request

ES146 | Eurostrut | Half Piece Pipe Clamp (Stainless Steel)

SPECIFICATIONS

- Surface finish:
  - Stainless steel 304 (SS304)
  - Stainless steel 316 (SS316)
- Other dimensions and finishes available on request.

ORDERING NOTES

- ES146 is a half piece pipe clamp, a complete pipe clamp consists of 2 half pieces.
- Pipe clamps will be supplied without bolts and nuts.
- Surface finish needs to be specified upon ordering.



Available surface finishes	Change SS304 to	Stock
Stainless steel A4 / 316L	SS316	●
Stainless steel A2 / 304	-	●

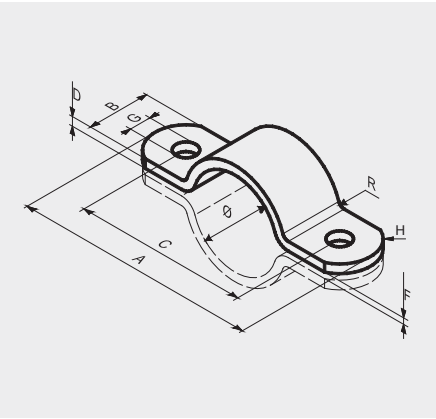

	Article number	Ø mm	Ø inch	Ø DN	A mm	BxD mm	C mm	F mm	G mm	H mm	R mm	kg/ unit	Bolt size
●	ES146/8SS304	8				25 x 3	0	3	7	20	3		M6x20
●	ES146/10SS304	10			53	25 x 3	32	3	7	20	3	0.03	M6x20
●	ES146/12SS304	12			63	25 x 3	39	3	7	20	3	0.03	M6x20
●	ES146/16SS304	16			67	25 x 3	43	3	7	20	3	0.04	M6x20
●	ES146/18SS304	18	3/8"	10	69	25 x 3	45	3	7	20	3	0.04	M6x20
●	ES146/20SS304	20			71	25 x 3	47	3	7	20	3	0.04	M6x20
●	ES146/22SS304	22	1/2"	15	73	25 x 3	49	3	7	20	3	0.04	M6x20
●	ES146/25SS304	25			76	25 x 3	52	3	7	20	3	0.05	M6x20
●	ES146/27SS304	27	3/4"	20	78	25 x 3	54	3	7	20	3	0.05	M6x20
●	ES146/30SS304	30			81	25 x 3	57	3	7	20	3	0.05	M6x20
●	ES146/32SS304	32			83	25 x 3	59	3	7	20	3	0.05	M6x20
●	ES146/34SS304	34	1"	25	85	25 x 3	61	3	7	20	3	0.05	M6x20
●	ES146/38SS304	38			89	25 x 3	65	3	7	20	3	0.06	M6x20
●	ES146/42SS304	42	1 1/4"	32	102	30 x 3	74	3	9	25	4	0.07	M8x20
●	ES146/45SS304	45			105	30 x 3	77	3	9	25	4	0.08	M8x20
●	ES146/48SS304	48	1 1/2"	40	108	30 x 3	80	3	9	25	4	0.08	M8x20
●	ES146/51SS304	51			112	30 x 3	83	3	9	25	4	0.08	M8x20
●	ES146/54SS304	54			114	30 x 3	86	3	9	25	4	0.09	M8x20
●	ES146/57SS304	57			117	30 x 3	89	3	9	25	4	0.09	M8x20
●	ES146/60SS304	60	2"	50	120	30 x 3	92	3	9	25	4	0.09	M8x20
●	ES146/63SS304	63			123	30 x 3	95	3	9	25	4	0.1	M8x20
●	ES146/66SS304	66			126	30 x 3	98	3	9	25	4	0.1	M8x20
●	ES146/70SS304	70			138	40 x 4	110	4	10	30	4	0.19	M8x20
●	ES146/73SS304	73			141	40 x 4	113	4	10	30	4	0.2	M8x20
●	ES146/76SS304	76	2 1/2"	65	144	40 x 4	116	4	10	30	4	0.2	M8x20
●	ES146/80SS304	80			148	40 x 4	120	4	10	30	4	0.21	M8x20
●	ES146/83SS304	83			151	40 x 4	123	4	10	30	4	0.21	M8x20
●	ES146/89SS304	89	3"	80	157	40 x 4	129	4	10	30	4	0.24	M8x20
●	ES146/95SS304	95			163	40 x 4	135	4	10	30	4	0.25	M8x20
●	ES146/102SS304	102	3 1/2"	90	170	40 x 4	142	4	10	30	4	0.26	M8x20
●	ES146/108SS304	108			176	40 x 4	148	4	10	30	4	0.27	M8x20

	Article number	Ø mm	Ø inch	Ø DN	A mm	BxD mm	C mm	F mm	G mm	H mm	R mm	kg/ unit	Bolt size
●	ES146/114SS304	114	4"	100	182	40 x 4	154	4	10	30	4	0.27	M8x20
●	ES146/120SS304	120			188	40 x 4	160	4	10	30	4	0.28	M8x20
●	ES146/127SS304	127			195	40 x 4	167	4	10	30	4	0.33	M8x20
●	ES146/133SS304	133			218	50 x 5	182	5	12	40	5	0.5	M10x30
●	ES146/140SS304	140	5"	125	225	50 x 5	189	5	12	40	5	0.56	M10x30
●	ES146/146SS304	146			231	50 x 5	195	5	12	40	5	0.57	M10x30
●	ES146/152SS304	152			237	50 x 5	201	5	12	40	5	0.58	M10x30
●	ES146/159SS304	159			244	50 x 5	208	5	12	40	5	0.61	M10x30
●	ES146/165SS304	165			250	50 x 5	214	5	12	40	5	0.62	M10x30
●	ES146/168SS304	168	6"	150	253	50 x 5	217	5	12	40	5	0.63	M10x30
●	ES146/174SS304	174			259	50 x 5	223	5	12	40	5	0.66	M10x30
●	ES146/178SS304	178			263	50 x 5	227	5	12	40	5	0.69	M10x30
●	ES146/191SS304	191			276	50 x 5	240	5	12	40	5	0.67	M10x30
●	ES146/194SS304	194	7"	175	279	50 x 5	243	5	12	40	5	0.71	M10x30
●	ES146/200SS304	200			285	50 x 5	249	5	12	40	5	0.74	M10x30
●	ES146/203SS304	203			288	50 x 5	252	5	12	40	5	0.75	M10x30
●	ES146/216SS304	216			301	50 x 5	265	5	12	40	5	0.77	M10x30
●	ES146/219SS304	219	8"	200	304	50 x 5	268	5	12	40	5	0.77	M10x30
●	ES146/226SS304	226			311	50 x 5	275	5	12	40	5	0.8	M10x30
●	ES146/230SS304	230			315	50 x 5	279	5	12	40	5	0.82	M10x30
●	ES146/241SS304	241			341	50 x 5	301	5	14	40	8	0.85	M12x35
●	ES146/245SS304	245			345	50 x 5	305	5	14	40	8	0.88	M12x35
●	ES146/253SS304	253			353	50 x 5	313	5	14	40	8	0.89	M12x35
●	ES146/267SS304	267			367	50 x 5	327	5	14	40	8	1	M12x35
●	ES146/273SS304	273	10"	250	373	50 x 5	333	5	14	40	8	1.03	M12x35
●	ES146/300SS304	300			400	50 x 5	360	5	14	40	8	1.05	M12x35
●	ES146/304SS304	304			405	50 x 5	365	5	14	40	8	1.09	M12x35
●	ES146/315SS304	315			415	50 x 5	375	5	14	40	8	1.11	M12x35
●	ES146/318SS304	318			418	50 x 5	378	5	14	40	8	1.12	M12x35
●	ES146/324SS304	324	12"	300	424	50 x 5	384	5	14	40	8	1.16	M12x35
●	ES146/356SS304	356	14"	350	456	50 x 5	416	5	14	40	8	1.26	M12x35
●	ES146/368SS304	368			468	50 x 5	428	5	14	40	8	1.3	M12x35
●	ES146/406SS304	406	16"	400	506	50 x 5	466	5	14	40	8	1.38	M12x35
●	ES146/420SS304	420			520	50 x 5	480	5	14	40	8	1.43	M12x35
●	ES146/457SS304	457	18"	450	557	50 x 5	517	5	14	40	8	1.5	M12x35
●	ES146/508SS304	508	20"	500	608	50 x 5	568	5	14	40	8	1.66	M12x35
●	ES146/520SS304	520			620	50 x 5	580	5	14	40	8	1.76	M12x35
●	ES146/559SS304	559	22"	550	659	50 x 5	619	5	14	40	8	1.86	M12x35
●	ES146/610SS304	610	24"	600	710	50 x 5	670	5	14	40	8	1.99	M12x35
●	ES146/660SS304	660	26"	650	760	50 x 5	720	5	14	40	8	2.15	M12x35
●	ES146/710SS304	710	28"	700	810	50 x 5	770	5	14	40	8	2.3	M12x35
●	ES146/762SS304	762	30"	750	862	50 x 5	822	5	14	40	8	2.5	M12x35
●	ES146/813SS304	813	32"	800	913	50 x 5	873	5	14	40	8	2.8	M12x35
●	ES146/914SS304	914	36"	900	1014	50 x 5	974	5	14	40	8	3	M12x35
●	ES146/1016SS304	1016	40"	1000	1116	50 x 5	1076	5	14	40	8	3.5	M12x35

● In stock ● Limited stock ● On request

ES145A | Eurostrut | Two Piece Pipe Clamp (DIN 3567)

SPECIFICATIONS

- Surface finish:
  - Plain oil (POF)
  - Hot dip galvanized (HDG)
  - Stainless steel 304 (SS304)
  - Stainless steel 316 (SS316)
- Other dimensions and finishes available on request.

ORDERING NOTES

- Pipe clamps will be supplied without bolts and nuts.
- Surface finish needs to be specified upon ordering.



Available surface finishes	Change HDG to	Stock
Hot dip galvanized	-	●
Stainless steel A4 / 316L	SS316	●
Stainless steel A2 / 304	SS304	●
Plain oil	POF	●

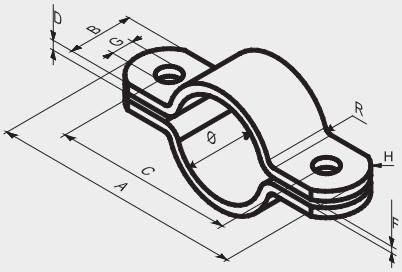

	Article number	Ø mm	Ø inch	Ø DN	A mm	BxD mm	C mm	F mm	G mm	H mm	R mm	kg/ unit	Bolt size
●	ES145A/22HDG	22	1/2	15	86	30 x 5	56	7	12	18	4	0.17	M10x30
●	ES145A/25HDG	25			92	30 x 5	62	7	12	18	4		M10x30
●	ES145A/27HDG	27	3/4	20	96	30 x 5	66	7	12	18	4	0.2	M10x30
●	ES145A/30HDG	30			98	30 x 5	68	7	12	18	4	0.2	M10x30
●	ES145A/32HDG	32			100	30 x 5	70	7	12	18	4		M10x30
●	ES145A/34HDG	34	1	25	102	30 x 5	72	7	12	18	4	0.22	M10x30
●	ES145A/38HDG	38			106	30 x 5	76	7	12	18	4	0.24	M10x30
●	ES145A/42HDG	42	1 1/4	32	112	30 x 5	82	7	12	18	4	0.25	M10x30
●	ES145A/45HDG	45			114	30 x 5	84	7	12	18	4	0.25	M10x30
●	ES145A/48HDG	48	1 1/2	40	118	30 x 5	88	7	12	18	4	0.28	M10x30
●	ES145A/54HDG	54			124	30 x 5	94	7	12	18	4		M10x30
●	ES145A/57HDG	57			144	40 x 6	104	9	14	22	6	0.57	M12x40
●	ES145A/60HDG	60	2	50	148	40 x 6	108	9	14	22	6	0.56	M12x40
●	ES145A/63HDG	63			151	40 x 6	111	9	14	22	6		M12x40
●	ES145A/66HDG	66			154	40 x 6	114	9	14	22	6		M12x40
●	ES145A/70HDG	70			158	40 x 6	118	9	14	22	6		M12x40
●	ES145A/76HDG	76	2 1/2	65	162	40 x 6	122	9	14	22	6	0.65	M12x40
●	ES145A/80HDG	80			166	40 x 6	126	9	14	22	6		M12x40
●	ES145A/83HDG	83			169	40 x 6	129	9	14	22	6		M12x40
●	ES145A/89HDG	89	3	80	176	40 x 6	136	9	14	22	6	0.74	M12x40
●	ES145A/95HDG	95			182	40 x 6	142	9	14	22	6		M12x40
●	ES145A/102HDG	102	3 1/2	90	189	40 x 6	149	9	14	22	6	0.85	M12x40
●	ES145A/108HDG	108			220	50 x 8	172	11	18	38	6	1.48	M16x50
●	ES145A/114HDG	114	4	100	226	50 x 8	178	11	18	38	6	1.64	M16x50
●	ES145A/120HDG	120			232	50 x 8	184	11	18	38	6		M16x50
●	ES145A/127HDG	127			239	50 x 8	191	11	18	38	6	1.75	M16x50
●	ES145A/133HDG	133			245	50 x 8	197	11	18	38	6	1.8	M16x50
●	ES145A/140HDG	140	5	125	252	50 x 8	204	11	18	38	6	1.87	M16x50
●	ES145A/146HDG	146			258	50 x 8	210	11	18	38	6		M16x50
●	ES145A/152HDG	152			264	50 x 8	216	11	18	38	6	1.96	M16x50
●	ES145A/159HDG	159			270	50 x 8	222	11	18	38	6	2.05	M16x50

	Article number	Ø mm	Ø inch	Ø DN	A mm	BxD mm	C mm	F mm	G mm	H mm	R mm	kg/ unit	Bolt size
●	ES145A/165HDG	165			276	50 x 8	228	11	18	38	6		M16x50
●	ES145A/168HDG	168	6	150	280	50 x 8	232	11	18	38	6	2.1	M16x50
●	ES145A/174HDG	174			286	50 x 8	238	11	18	38	6	2.2	M16x50
●	ES145A/178HDG	178			290	50 x 8	242	11	18	38	6	2.22	M16x50
●	ES145A/191HDG	191			302	50 x 8	254	11	18	38	6	2.4	M16x50
●	ES145A/194HDG	194	7	175	306	50 x 8	258	11	18	38	6	2.3	M16x50
●	ES145A/200HDG	200			312	50 x 8	264	11	18	38	6	0	M16x50
●	ES145A/203HDG	203			315	50 x 8	267	11	18	38	6	0	M16x50
●	ES145A/216HDG	216			328	50 x 8	280	11	18	38	6	2.6	M16x50
●	ES145A/219HDG	219	8	200	332	50 x 8	284	11	18	38	6	2.65	M16x50
●	ES145A/226HDG	226			339	50 x 8	291	11	18	38	6		M16x50
●	ES145A/230HDG	230			343	50 x 8	295	11	18	38	6		M16x50
●	ES145A/241HDG	241			354	50 x 8	306	11	18	38	6	2.85	M16x50
●	ES145A/245HDG	245			358	50 x 8	310	11	18	38	6		M16x50
●	ES145A/253HDG	253			366	50 x 8	318	11	18	38	6		M16x50
●	ES145A/267HDG	267			402	60 x 8	342	14	22	60	8	3.85	M20x60
●	ES145A/273HDG	273	10	250	408	60 x 8	348	14	22	60	8	3.86	M20x60
●	ES145A/300HDG	300			435	60 x 8	375	14	22	60	8		M20x60
●	ES145A/318HDG	318			452	60 x 8	392	14	22	60	8	4.41	M20x60
●	ES145A/324HDG	324	12	300	458	60 x 8	398	14	22	60	8	4.38	M20x60
●	ES145A/356HDG	356	14	350	492	60 x 8	432	14	22	60	8	5.09	M20x60
●	ES145A/368HDG	368			504	60 x 8	444	14	22	60	8	5.3	M20x60
●	ES145A/406HDG	406	16	400	570	70 x 10	498	18	27	60	10	7.93	M24x80
●	ES145A/420HDG	420			582	70 x 10	510	18	27	60	10	8.3	M24x80
●	ES145A/457HDG	457	18	450	619	70 x 10	547	18	27	60	10	9	M24x80
●	ES145A/508HDG	508	20	500	672	70 x 10	600	18	27	60	10	9.64	M24x80
●	ES145A/520HDG	520			686	70 x 10	614	18	27	60	10	10.5	M24x80
●	ES145A/559HDG	559	22	550	725	70 x 10	653	18	27	60	10		M24x80
●	ES145A/610HDG	610	24	600	776	70 x 10	704	18	27	60	10	11.83	M24x80
●	ES145A/710HDG	710	28	700	876	70 x 10	804	18	27	60	10		M24x80

● In stock ● Limited stock ● On request

ES145B | Eurostrut | Two Piece Pipe Clamp (DIN 3567)

SPECIFICATIONS

- Surface finish:
  - Plain oil (POF)
  - Hot dip galvanized (HDG)
  - Stainless steel 304 (SS304)
  - Stainless steel 316 (SS316)
- Other dimensions and finishes available on request.

ORDERING NOTES

- Pipe clamps will be supplied without bolts and nuts.
- Surface finish needs to be specified upon ordering.



Available surface finishes	Change HDG to	Stock
Hot dip galvanized	-	●
Stainless steel A4 / 316L	SS316	●
Stainless steel A2 / 304	SS304	●
Plain oil	POF	●

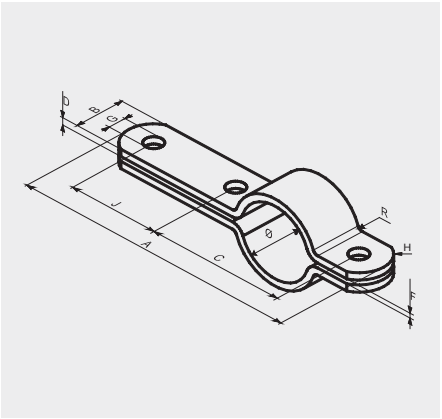

	Article number	Ø mm	Ø inch	Ø DN	A mm	BxD mm	C mm	F mm	G mm	H mm	J mm	R mm	kg/ unit	Bolt size
●	ES145B/22HDG	22	1/2"	15	132	30 x 5	56	7	12	18	46	4		M10x30
●	ES145B/25HDG	25			138	30 x 5	62	7	12	18	46	4		M10x30
●	ES145B/27HDG	27	3/4"	20	142	30 x 5	66	7	12	18	46	4	0.33	M10x30
●	ES145B/30HDG	30			144	30 x 5	68	7	12	18	46	4	0.34	M10x30
●	ES145B/32HDG	32			146	30 x 5	70	7	12	18	46	4		M10x30
●	ES145B/34HDG	34	1"	25	148	30 x 5	72	7	12	18	46	4	0.36	M10x30
●	ES145B/38HDG	38			152	30 x 5	76	7	12	18	46	4	0.37	M10x30
●	ES145B/42HDG	42	1 1/4"	32	158	30 x 5	82	7	12	18	46	4	0.39	M10x30
●	ES145B/45HDG	45			160	30 x 5	84	7	12	18	46	4	0.4	M10x30
●	ES145B/48HDG	48	1 1/2"	40	164	30 x 5	88	7	12	18	46	4	0.41	M10x30
●	ES145B/54HDG	54			170	30 x 5	94	7	12	18	46	4		M10x30
●	ES145B/57HDG	57			198	40 x 6	104	9	14	22	54	6	0.77	M12x40
●	ES145B/60HDG	60	2"	50	202	40 x 6	108	9	14	22	54	6	0.78	M12x40
●	ES145B/63HDG	63			205	40 x 6	111	9	14	22	54	6		M12x40
●	ES145B/66HDG	66			208	40 x 6	114	9	14	22	54	6		M12x40
●	ES145B/70HDG	70			212	40 x 6	118	9	14	22	54	6		M12x40
●	ES145B/76HDG	76	2 1/2"	65	216	40 x 6	122	9	14	22	54	6	0.86	M12x40
●	ES145B/80HDG	80			220	40 x 6	126	9	14	22	54	6		M12x40
●	ES145B/83HDG	83			223	40 x 6	129	9	14	22	54	6		M12x40
●	ES145B/89HDG	89	3"	80	230	40 x 6	136	9	14	22	54	6	0.96	M12x40
●	ES145B/95HDG	95			236	40 x 6	142	9	14	22	54	6		M12x40
●	ES145B/102HDG	102	3 1/2"	90	243	40 x 6	149	9	14	22	54	6		M12x40
●	ES145B/108HDG	108			290	50 x 8	172	11	18	38	70	6	2.03	M16x50
●	ES145B/114HDG	114	4"	100	296	50 x 8	178	11	18	38	70	6	2.07	M16x50
●	ES145B/120HDG	120			302	50 x 8	184	11	18	38	70	6		M16x50
●	ES145B/127HDG	127			309	50 x 8	191	11	18	38	70	6		M16x50
●	ES145B/133HDG	133			314	50 x 8	196	11	18	38	70	6	2.21	M16x50
●	ES145B/140HDG	140	5"	125	322	50 x 8	204	11	18	38	70	6	2.26	M16x50
●	ES145B/146HDG	146			328	50 x 8	210	11	18	38	70	6		M16x50
●	ES145B/152HDG	152			334	50 x 8	216	11	18	38	70	6		M16x50
●	ES145B/159HDG	159			340	50 x 8	222	11	18	38	70	6	2.4	M16x50

	Article number	Ø mm	Ø inch	Ø DN	A mm	BxD mm	C mm	F mm	G mm	H mm	J mm	R mm	kg/ unit	Bolt size
●	ES145B/165HDG	165			346	50 x 8	228	11	18	38	70	6		M16x50
●	ES145B/168HDG	168	6"	150	350	50 x 8	232	11	18	38	70	6	2.53	M16x50
●	ES145B/174HDG	174			356	50 x 8	238	11	18	38	70	6		M16x50
●	ES145B/178HDG	178			360	50 x 8	242	11	18	38	70	6		M16x50
●	ES145B/191HDG	191			372	50 x 8	254	11	18	38	70	6	2.83	M16x50
●	ES145B/194HDG	194	7"	175	376	50 x 8	258	11	18	38	70	6	2.93	M16x50
●	ES145B/203HDG	203			385	50 x 8	267	11	18	38	70	6		M16x50
●	ES145B/216HDG	216			389	50 x 8	280	11	18	38	70	6	3	M16x50
●	ES145B/219HDG	219	8"	200	402	50 x 8	284	11	18	38	70	6	3.1	M16x50
●	ES145B/226HDG	226			409	50 x 8	291	11	18	38	70	6		M16x50
●	ES145B/241HDG	241			424	50 x 8	306	11	18	38	70	6		M16x50
●	ES145B/245HDG	245			428	50 x 8	310	11	18	38	70	6		M16x50
●	ES145B/253HDG	253			436	50 x 8	318	11	18	38	70	6		M16x50
●	ES145B/267HDG	267			488	60 x 8	342	14	22	60	86	8	4.45	M20x60
●	ES145B/273HDG	273	10"	250	494	60 x 8	348	14	22	60	86	8	4.53	M20x60
●	ES145B/300HDG	300			521	60 x 8	375	14	22	60	86	8		M20x60
●	ES145B/318HDG	318			538	60 x 8	392	14	22	60	86	8	5	M20x60
●	ES145B/324HDG	324	12"	300	544	60 x 8	398	14	22	60	86	8	5.11	M20x60
●	ES145B/356HDG	356	14"	350	578	60 x 8	432	14	22	60	86	8	5.72	M20x60
●	ES145B/368HDG	368			590	60 x 8	444	14	22	60	86	8	6	M20x60
●	ES145B/406HDG	406	16"	400	672	70 x 10	498	18	27	60	104	10	9.64	M24x80
●	ES145B/420HDG	420			684	70 x 10	510	18	27	60	104	10	9.81	M24x80
●	ES145B/457HDG	457	18"	450	721	70 x 10	547	18	27	60	104	10		M24x80
●	ES145B/508HDG	508	20"	500	774	70 x 10	600	18	27	60	104	10	11.4	M24x80
●	ES145B/520HDG	520			788	70 x 10	614	18	27	60	104	10	11.6	M24x80
●	ES145B/559HDG	559	22"	550	827	70 x 10	653	18	27	60	104	10		M24x80
●	ES145B/610HDG	610	24"	600	878	70 x 10	704	18	27	60	104	10		M24x80

● In stock ● Limited stock ● On request

ES103 | Eurostrut | Two Piece Pipe Clamp

SPECIFICATIONS

- Surface finish:
  - Plain oil (POF)
  - Hot dip galvanized (HDG)
  - Stainless steel 304 (SS304)
  - Stainless steel 316 (SS316)
- Other dimensions and finishes available on request.

ORDERING NOTES

- Pipe clamps will be supplied without bolts and nuts.
- Surface finish needs to be specified upon ordering.



Available surface finishes	Change HDG to	Stock
Hot dip galvanized	-	●
Stainless steel A4 / 316L	SS316	●
Stainless steel A2 / 304	SS304	●
Plain oil	POF	●

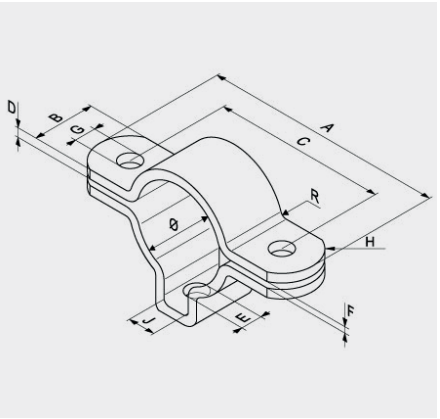

	Article number	Ø mm	Ø inch	Ø DN	A mm	BxD mm	C mm	F mm	G mm	H mm	J mm	E mm	R mm	kg/ unit	Bolt size
●	ES103/22HDG	22			74	25 x 3	49	3	9	18	14	9	4		
●	ES103/27HDG	27			79	25 x 3	54	3	9	18	14	9	4		
●	ES103/30HDG	30			82	25 x 3	57	3	9	18	14	9	4		
●	ES103/34HDG	34			86	25 x 3	61	3	9	18	14	9	4		
●	ES103/42HDG	42			94	25 x 3	69	3	9	18	14	9	4		
●	ES103/48HDG	48			100	25 x 3	75	3	9	18	14	9	4		
●	ES103/60HDG	60			112	25 x 3	87	3	9	18	14	9	4		
●	ES103/76HDG	76			128	25 x 3	103	3	9	18	14	9	4		
●	ES103/89HDG	89			141	25 x 3	116	3	9	18	14	9	4		

● In stock ● Limited stock ● On request

ES111 | Eurostrut | U-Bolt

SPECIFICATIONS

- Surface finish:
  - Plain oil (POF)
  - Electro zinc plated (EG)
  - Stainless steel 304 (SS304)
  - Stainless steel 316 (SS316)
- Other dimensions and finishes available on request.

ORDERING NOTES

- U-Bolts will be supplied without nuts.
- Surface finish needs to be specified upon ordering.



Available surface finishes	Add to number
Hot dip galvanized	HDG
Stainless steel A4 / 316L	SS316
Stainless steel A2 / 304	SS304
Electro zinc plated	EG
Plain oil	POF

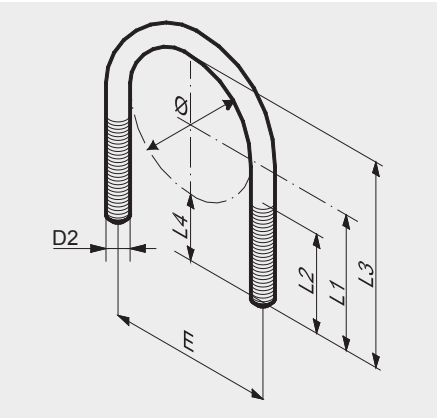

M06

HDG	304	316	EG	POF	Article number	Ø mm	Ø inch	DN mm	A1	E mm	L1 mm	L2 mm	L3 mm	L4 mm	kg/ unit
–	●	●	–	–	ES111M6/12	12			M06	19	21	15	27	15	0.01
–	●	●	–	–	ES111M6/14	14			M06	21	22	16	29	15	0.02
–	●	●	●	●	ES111M6/16	16			M06	23	23	17	31	15	0.02
–	●	●	●	●	ES111M6/18	18	3/8"	10	M06	25	24	18	33	15	0.02
–	●	●	●	●	ES111M6/20	20			M06	27	25	19	35	15	0.02
–	●	●	●	●	ES111M6/22	22	1/2"	15	M06	29	26	20	37	15	0.02
–	●	●	–	–	ES111M6/25	25			M06	32	28	22	40	15	0.02
–	●	●	●	●	ES111M6/27	27	3/4"	20	M06	34	29	22	42	15	0.02
–	●	●	–	–	ES111M6/30	30			M06	37	30	24	45	15	0.02
–	●	●	–	–	ES111M6/32	32			M06	39	31	25	47	15	0.03
–	●	●	●	●	ES111M6/34	34	1"	25	M06	41	32	26	49	15	0.02
–	●	–	●	●	ES111M6/38	38			M06	46	34	22	53	15	0.03
–	–	–	●	●	ES111M6/42	42	1 1/4"	32	M06	50	41	27	62	20	0.03
–	●	–	–	–	ES111M6/45	45			M06						
–	–	–	●	●	ES111M6/48	48	1 1/2"	40	M06	56	44	27	68	20	0.04
–	●	●	●	●	ES111M6/60	60	2"	50	M06	69	55	32	85	25	0.04
–	–	–	●	●	ES111M6/76	76	2 1/2"	65	M06	85	63	32	101	25	0.05
–	–	–	●	●	ES111M6/89	89	3"	80	M06	98	70	32	114	25	0.05
–	–	–	●	●	ES111M6/114	114	4"	100	M06	123	87	37	144	30	0.07

● In stock ● Limited stock ● On request – Not available

M08

HDG	304	316	EG	POF	Article number	Ø mm	Ø inch	DN mm	A1	E mm	L1 mm	L2 mm	L3 mm	L4 mm	kg/ unit
●	–	–	–	–	ES111M8/22	22	1/2"	15	M08	31	26	18	37	15	0.04
–	●	●	●	●	ES111M8/25	25			M08	34	28	19	40	15	0.04
●	●	●	●	●	ES111M8/27	27	3/4"	20	M08	36	29	20	42	15	0.03
●	●	●	●	●	ES111M8/34	34	1"	25	M08	43	32	24	49	15	0.04
●	●	●	●	●	ES111M8/42	42	1 1/4"	32	M08	52	41	29	62	20	0.05
–	●	●	–	–	ES111M8/45	45			M08	55	43	29	65	20	0.05
●	●	●	●	●	ES111M8/48	48	1 1/2"	40	M08	58	44	29	68	20	0.05
–	●	●	●	●	ES111M8/54	54			M08	64	47	29	74	20	0.06
–	●	●	–	–	ES111M8/57	57			M08	67	49	29	77	20	0.06
●	●	●	●	●	ES111M8/60	60	2"	50	M08	71	55	34	85	25	0.07
–	●	●	●	●	ES111M8/63	63			M08	74	57	34	88	25	0.07
–	●	●	–	–	ES111M8/66	66			M08	77	58	34	91	25	0.08
–	●	●	–	–	ES111M8/70	70			M08	81	60	34	95	25	0.09
●	●	●	●	●	ES111M8/76	76	2 1/2"	65	M08	87	63	34	101	25	0.08
–	●	●	–	–	ES111M8/80	80			M08	91	65	34	105	25	0.1
–	●	●	–	–	ES111M8/83	83			M08	94	67	34	108	25	0.9
–	●	●	●	●	ES111M8/89	89	3"	80	M08	100	70	34	114	25	0.09
–	●	●	–	–	ES111M8/95	95			M08	106	73	34	120	25	0.9
–	–	–	●	●	ES111M8/102	102	3 1/2"	90	M08	113	81	39	132	30	0.1
–	–	–	●	●	ES111M8/108	108			M08	119	84	39	138	30	0.13
–	–	–	●	●	ES111M8/114	114	4"	100	M08	125	87	39	144	30	0.11
–	–	–	●	●	ES111M8/120	120			M08	132	90	39	150	30	0.12
–	–	–	●	●	ES111M8/127	127			M08	139	94	39	157	30	0.15
–	–	–	●	●	ES111M8/133	133			M08	145	97	39	163	30	0.15
–	–	–	●	●	ES111M8/140	140	5"	125	M08	152	100	39	170	30	0.16

● In stock ● Limited stock ● On request – Not available

M10

HDG	304	316	EG	POF	Article number	Ø mm	Ø inch	DN mm	A1	E mm	L1 mm	L2 mm	L3 mm	L4 mm	kg/ unit
●	–	–	–	●	ES111M10/27	27	3/4"	20	M10	38	29	18	42	15	0.07
–	●	●	●	●	ES111M10/30	30			M10	41	30	20	45	15	0.07
–	●	●	●	●	ES111M10/32	32			M10	43	31	21	47	15	0.07
●	●	●	●	●	ES111M10/34	34	1"	25	M10	45	32	22	49	15	0.06
–	●	●	●	●	ES111M10/38	38			M10	50	34	24	53	15	0.07
●	●	●	●	●	ES111M10/42	42	1 1/4"	32	M10	54	41	31	62	20	0.08
●	●	●	●	●	ES111M10/45	45			M10	57	43	31	65	20	0.1
●	●	●	●	●	ES111M10/48	48	1 1/2"	40	M10	60	44	31	68	20	0.09
–	●	●	●	●	ES111M10/54	54			M10	66	47	31	74	20	0.09
●	●	●	●	●	ES111M10/60	60	2"	50	M10	73	55	36	85	25	0.11
–	●	–	●	●	ES111M10/70	70			M10	83	60	36	95	25	0.12
●	–	–	●	●	ES111M10/76	76	2 1/2"	65	M10	89	63	36	101	25	0.13
●	●	●	●	●	ES111M10/89	89	3"	80	M10	102	70	36	114	25	0.14
–	●	●	●	●	ES111M10/102	102	3 1/2"	90	M10	115	81	41	132	30	0.17
–	●	●	●	●	ES111M10/108	108			M10	121	84	41	138	30	0.17
●	●	●	●	●	ES111M10/114	114	4"	100	M10	127	87	41	144	30	0.18
–	●	●	●	●	ES111M10/120	120			M10	134	90	41	150	30	0.22
–	●	●	●	●	ES111M10/127	127			M10	141	94	41	157	30	0.2
–	●	●	●	●	ES111M10/133	133			M10	147	97	41	163	30	0.21
●	●	●	●	●	ES111M10/140	140	5"	125	M10	154	100	41	170	30	0.21
–	●	●	–	–	ES111M10/152	152			M10	166	106	41	182	30	0.27
–	●	●	–	–	ES111M10/159	159			M10	173	110	41	189	30	0.25
–	●	●	–	–	ES111M10/165	165			M10	179	118	46	200	35	0.29
●	●	●	–	●	ES111M10/168	168	6"	150	M10	182	119	46	203	35	0.26
–	●	●	–	–	ES111M10/178	178			M10	192	124	46	213	35	0.28
●	–	–	–	●	ES111M10/219	219	8"	200	M10	233	150	51	259	40	0.34

● In stock ● Limited stock ● On request – Not available

M12

HDG	304	316	EG	POF	Article number	Ø mm	Ø inch	DN mm	A1	E mm	L1 mm	L2 mm	L3 mm	L4 mm	kg/ unit
●	●	●	–	●	ES111M12/57	57			M12	71	49	33	77	20	0.15
●	●	●	●	●	ES111M12/60	60	2"	50	M12	75	55	38	85	25	0.16
–	●	●	●	●	ES111M12/63	63			M12	78	57	38	88	25	0.19
–	●	●	●	●	ES111M12/66	66			M12	81	58	38	91	25	0.2
–	●	●	●	●	ES111M12/70	70			M12	85	60	38	95	25	0.18
●	●	●	●	●	ES111M12/76	76	2 1/2"	65	M12	91	63	38	101	25	0.22
–	●	●	●	●	ES111M12/80	80			M12	95	65	38	105	25	2
–	●	–	●	●	ES111M12/83	83			M12	98	67	38	108	25	0.23
●	●	●	●	●	ES111M12/89	89	3"	80	M12	104	70	38	114	25	0.21
–	●	●	●	●	ES111M12/95	95			M12	110	73	38	120	25	0.22
●	●	●	●	●	ES111M12/102	102	3 1/2"	90	M12	117	81	43	132	30	0.25
–	●	●	●	●	ES111M12/108	108			M12	123	84	43	138	30	0.25
●	●	●	●	●	ES111M12/114	114	4"	100	M12	129	87	43	144	30	0.26
–	–	–	●	●	ES111M12/120	120			M12	136	90	43	150	30	0.28
–	–	–	●	●	ES111M12/127	127			M12	143	94	43	157	30	0.34
–	–	–	●	●	ES111M12/133	133			M12	149	97	43	163	30	0.35
●	–	–	●	●	ES111M12/140	140	5"	125	M12	156	100	43	170	30	0.32
●	●	●	●	●	ES111M12/168	168	6"	150	M12	184	119	48	203	35	0.38
–	●	●	–	–	ES111M12/191	191			M12	207	136	53	231	40	0.49
–	●	●	–	–	ES111M12/194	194	7"	175	M12	210	137	53	234	40	0.45
●	●	●	●	●	ES111M12/219	219	8"	200	M12	235	150	53	259	40	0.48
–	●	●	–	–	ES111M12/241	241			M12	257	161	53	281	40	0.59
–	●	●	–	–	ES111M12/245	245			M12	261	163	53	285	40	0.6
–	●	●	–	–	ES111M12/267	267			M12	283	174	53	307	40	0.64
–	●	●	●	●	ES111M12/273	273	10"	250	M12	289	177	53	313	40	0.66
–	●	●	–	–	ES111M12/300	300			M12	317	190	53	340	40	0.71
–	●	●	–	–	ES111M12/318	318			M12	335	199	53	358	40	0.75
–	●	●	–	–	ES111M12/324	324	12"	300	M12	341	202	53	364	40	0.68
–	●	●	–	–	ES111M12/356	356	14"	350	M12	374	218	53	396	40	0.83
–	●	●	–	–	ES111M12/368	368			M12	386	224	53	408	40	0.8
–	●	●	–	–	ES111M12/406	406	16"	400	M12	424	248	58	451	45	0.95
–	●	●	–	–	ES111M12/420	420			M12	438	255	58	465	45	0.98
–	●	●	–	–	ES111M12/457	457	18"	450	M12	475	274	58	502	45	1.05
–	●	●	–	–	ES111M12/508	508	20"	500	M12	526	304	63	558	50	1.17
–	–	●	–	–	ES111M12/520	520			M12	538	310	63	570	50	1.19
–	–	●	–	–	ES111M12/610	610	24"	600	M12	628	340	55	645	35	1.36

● In stock ● Limited stock ● On request – Not available

M16

HDG	304	316	EG	POF	Article number	Ø mm	Ø inch	DN mm	A1	E mm	L1 mm	L2 mm	L3 mm	L4 mm	kg/ unit
–	–	–	●	●	ES111M16/89	89	3"	80	M16						
●	●	●	●	●	ES111M16/114	114	4"	100	M16	133	87	48	144	30	0.55
–	●	●	●	●	ES111M16/120	120			M16	140	90	48	150	30	0.51
–	●	●	●	●	ES111M16/127	127			M16	147	94	48	157	30	0.58
–	●	●	●	●	ES111M16/133	133			M16	153	97	48	163	30	0.55
●	●	●	●	●	ES111M16/140	140	5"	125	M16	160	100	48	170	30	0.59
–	●	●	●	●	ES111M16/152	152			M16	172	106	48	182	30	0.62
●	●	●	●	●	ES111M16/159	159			M16	179	110	48	189	30	0.72
–	●	●	●	●	ES111M16/165	165			M16	185	118	53	200	35	0.76
●	●	●	●	●	ES111M16/168	168	6"	150	M16	188	119	53	203	35	0.7
–	●	●	●	●	ES111M16/178	178			M16	198	124	53	213	35	0.81
●	●	–	●	●	ES111M16/219	219	8"	200	M16	239	150	58	259	40	0.88
●	●	–	●	●	ES111M16/273	273	10"	250	M16	293	177	58	313	40	1.06
–	●	–	●	●	ES111M16/324	324	12"	300	M16	345	202	58	364	40	1.24
–	–	–	–	●	ES111M16/356	356	14"	350	M16	377	218	62	396	40	

● In stock ● Limited stock ● On request – Not available

M20

HDG	304	316	EG	POF	Article number	Ø mm	Ø inch	DN mm	A1	E mm	L1 mm	L2 mm	L3 mm	L4 mm	kg/ unit
–	●	●	●	●	ES111M20/191	191			M20	215	136	62	231	40	1.38
–	●	●	●	●	ES111M20/194	194	7"	175	M20	218	137	62	234	40	1.3
●	●	●	●	●	ES111M20/219	219	8"	200	M20	243	150	62	259	40	1.39
–	●	●	●	●	ES111M20/241	241			M20	265	161	62	281	40	1.67
–	●	●	●	●	ES111M20/245	245			M20	269	163	62	285	40	1.54
–	●	●	●	●	ES111M20/267	267			M20	291	174	62	307	40	1.82
●	●	●	●	●	ES111M20/273	273	10"	250	M20	297	177	62	313	40	1.69
–	●	●	●	●	ES111M20/300	300			M20	325	190	62	340	40	1.86
–	●	●	●	●	ES111M20/318	318			M20	343	199	62	358	40	1.92
●	●	●	●	●	ES111M20/324	324	12"	300	M20	349	202	62	364	40	2.15
●	●	●	●	●	ES111M20/356	356	14"	350	M20	382	218	62	396	40	2.12
–	●	–	●	●	ES111M20/368	368			M20	394	224	62	408	40	2.2
●	●	●	●	●	ES111M20/406	406	16"	400	M20	432	248	67	451	45	2.41
–	–	–	●	●	ES111M20/457	457	18"	450	M20	483	274	67	502	45	2.95
●	–	–	●	●	ES111M20/508	508	20"	500	M20	534	304	72	558	50	2.96

● In stock ● Limited stock ● On request – Not available

M24

HDG	304	316	EG	POF	Article number	Ø mm	Ø inch	DN mm	A1	E mm	L1 mm	L2 mm	L3 mm	L4 mm	kg/ unit
–	–	–	●	●	ES111M24/324	324	12"	300	M24	353	202	66	364	40	2.82
–	–	–	●	●	ES111M24/356	356	14"	350	M24	386	218	66	396	40	3.05
–	–	–	●	●	ES111M24/368	368			M24	398	224	66	408	40	3.5
–	–	–	●	●	ES111M24/406	406	16"	400	M24	436	248	71	451	45	3.85
●	–	–	●	●	ES111M24/457	457	18"	450	M24	487	274	71	502	45	4.27
–	–	–	●	●	ES111M24/508	508	20"	500	M24	538	304	76	558	50	4.3
–	–	–	●	●	ES111M24/559	559	22"	550	M24	589	330	76	609	50	5.16
–	–	–	●	●	ES111M24/610	610	24"	600	M24	640	355	76	660	50	5.59
–	●	–	●	●	ES111M24/710	710	28"	700	M24	741	415	86	770	60	6.1
–	–	–	●	●	ES111M24/813	813	32"	800	M24	843	467	86	873	60	7.36
–	–	–	●	●	ES111M24/914	914	36"	900	M24	945	517	86	974	60	8.2

● In stock ● Limited stock ● On request – Not available

ES113 | Eurostrut | U-Bolt Long

SPECIFICATIONS

- Surface finish:
  - Plain oil (POF)
  - Electro zinc plated (EG)
  - Stainless steel 304 (SS304)
  - Stainless steel 316 (SS316)
- Other dimensions and finishes available on request.

ORDERING NOTES

- U-Bolts will be supplied without nuts.
- Surface finish needs to be specified upon ordering.



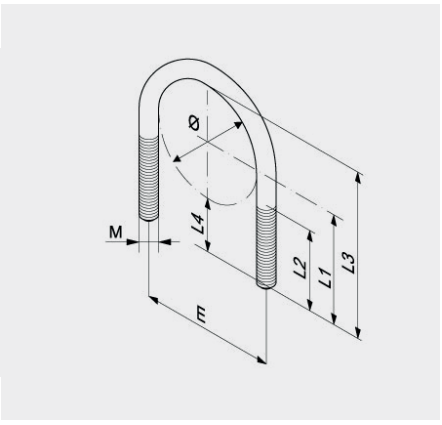

Available surface finishes	Add to number
Hot dip galvanized	HDG
Stainless steel A4 / 316L	SS316
Stainless steel A2 / 304	SS304
Electro zinc plated	EG
Plain oil	POF

HDG	304	316	EG	POF	Article number	Ø mm	Ø inch	DN mm	A1	E mm	L1 mm	L2 mm	L3 mm	L4 mm	kg/ unit
M6															
●	●	●	●	●	ES113M6/22	22	1/2"	15	M06	29	70	60	81	59	0.05
●	●	●	●	●	ES113M6/27	27	3/4"	20	M06	34	70	60	83	56	0.06
●	●	●	●	●	ES113M6/34	34	1"	25	M06	41	70	60	87	53	0.06
M8															
●	–	–	–	–	ES113M8/22	22	1/2"	15	M08	32	70	60	81	59	
●	–	–	–	–	ES113M8/27	27	3/4"	20	M08	37	70	60	83	56	
●	–	–	–	–	ES113M8/34	34	1"	25	M08	44	70	60	87	53	
M10															
●	●	●	●	–	ES113M10/42	42	1 1/4"	32	M10	54	72	60	93	51	0.13
●	●	●	●	●	ES113M10/48	48	1 1/2"	40	M10	60	76	65	100	52	0.14
●	●	●	●	●	ES113M10/60	60	2"	50	M10	72	82	65	112	52	0.15
M12															
●	●	●	●	●	ES113M12/76	76	2 1/2"	65	M12	90	97	75	135	59	0.33
●	●	●	●	●	ES113M12/89	89	3"	80	M12	104	102	75	146	57	0.36
●	●	●	●	●	ES113M12/102	102	3 1/2"	90	M12	117	108	75	159	57	0.38
●	●	●	●	●	ES113M12/114	114	4"	100	M12	130	114	75	171	57	0.41
●	●	●	●	●	ES113M12/140	140	5"	125	M12	156	126	75	196	56	0.46
M16															
●	●	●	●	●	ES113M16/168	168	6"	150	M16	188	155	95	239	71	0.9
●	–	–	●	●	ES113M16/194	194	7"	175	M16	214	168	95	265	71	
●	●	●	●	●	ES113M16/219	219	8"	200	M16	240	181	95	290	71	
M20															
●	●	●	●	●	ES113M20/273	273	10"	250	M20	298	212	100	348	75	
●	●	●	●	●	ES113M20/324	324	12"	300	M20	349	245	110	407	83	
●	●	●	●	●	ES113M20/356	356	14"	350	M20	382	261	110	439	83	
●	●	●	●	●	ES113M20/406	406	16"	400	M20	432	286	115	489	83	
M24															
–	●	–	●	●	ES113M24/324	324	12"	300	M24	353	245	110	407	83	4
–	–	–	●	●	ES113M24/356	356	14"	350	M24	386	261	110	439	83	
–	–	–	●	●	ES113M24/406	406	16"	400	M24	436	286	115	489	83	
●	●	●	●	●	ES113M24/457	457	18"	450	M24	487	321	120	549	92	
●	●	●	●	●	ES113M24/508	508	20"	500	M24	540	346	120	600	92	
●	●	●	●	●	ES113M24/610	610	24"	600	M24	642	397	120	702	92	7.66
●	●	–	●	●	ES113M24/762	762	30"	750	M24	794	473	120	854	92	7.95
–	–	–	●	●	ES113M24/813	813	32"	800	M24	848	510	130	916	103	

● In stock ● Limited stock ● On request – Not available

| + 31 10 522 33 51 | info@eurostrut.com | eurostrut.com

ES115 | Eurostrut | U-Bolt DIN3570

SPECIFICATIONS

- Surface finish:
  - Plain oil (POF)
  - Electro zinc plated (EG)
  - Stainless steel 304 (SS304)
  - Stainless steel 316 (SS316)
- Other dimensions and finishes available on request.

ORDERING NOTES

- U-Bolts will be supplied without nuts.
- Surface finish needs to be specified upon ordering.



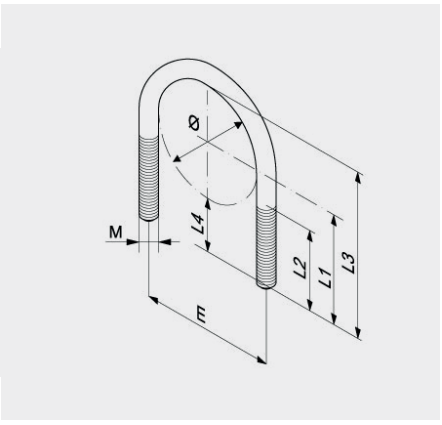

Available surface finishes	Add to number
Hot dip galvanized	HDG
Stainless steel A4 / 316L	SS316
Stainless steel A2 / 304	SS304
Electro zinc plated	EG
Plain oil	POF

HDG	304	316	EG	POF	Article number	Ø mm	Ø inch	DN mm	A1	E mm	L1 mm	L2 mm	L3 mm	L4 mm	kg/ unit
M10															
●	●	●	●	●	ES115M10/22	22	1/2"	15	M10	33	39	30	50	28	
●	●	●	●	●	ES115M10/27	27	3/4"	20	M10	40	47	40	60	33	0.07
●	●	●	●	●	ES115M10/34	34	1"	25	M10	48	49	40	66	32	0.08
●	●	●	●	●	ES115M10/42	42	1 1/4"	32	M10	56	55	50	76	34	0.09
●	●	●	●	●	ES115M10/48	48	1 1/2"	40	M10	62	58	50	82	34	0.1
●	●	●	●	●	ES115M12/60	60	2"	50	M12	76	67	50	97	37	0.17
●	●	●	●	●	ES115M12/76	76	2 1/2"	65	M12	94	75	50	113	37	0.2
●	●	●	●	●	ES115M12/89	89	3"	80	M12	106	82	50	126	37	0.23
●	●	●	●	●	ES115M16/114	114	4"	100	M16	136	98	60	155	41	0.54
●	●	●	●	●	ES115M16/140	140	5"	125	M16	164	105	60	175	35	0.61
●	●	●	●	●	ES115M16/168	168	6"	150	M16	192	117	60	201	33	0.7
●	●	●	●	●	ES115M16/194	194	7"	175	M16	218	136	60	233	39	0.8
●	●	●	●	●	ES115M20/219	219	8"	200	M20	248	154	70	263	44	1.4
●	●	●	●	●	ES115M20/273	273	10"	250	M20	302	178	70	314	41	1.68
●	●	●	●	●	ES115M20/324	324	12"	300	M20	352	203	70	365	41	1.94
●	●	●	●	●	ES115M24/356	356	14"	350	M24	402	233	70	411	55	
●	●	●	●	●	ES115M24/406	406	16"	400	M24	452	260	70	463	57	
●	–	–	●	●	ES115M24/508	508	20"	500	M24	554	311	70	565	57	

● In stock ● Limited stock ● On request – Not available

Stay up to date!

Follow **@eurostrut** on social media and sign in to our newsletter: **www.eurostrut.com/en/newsletter**



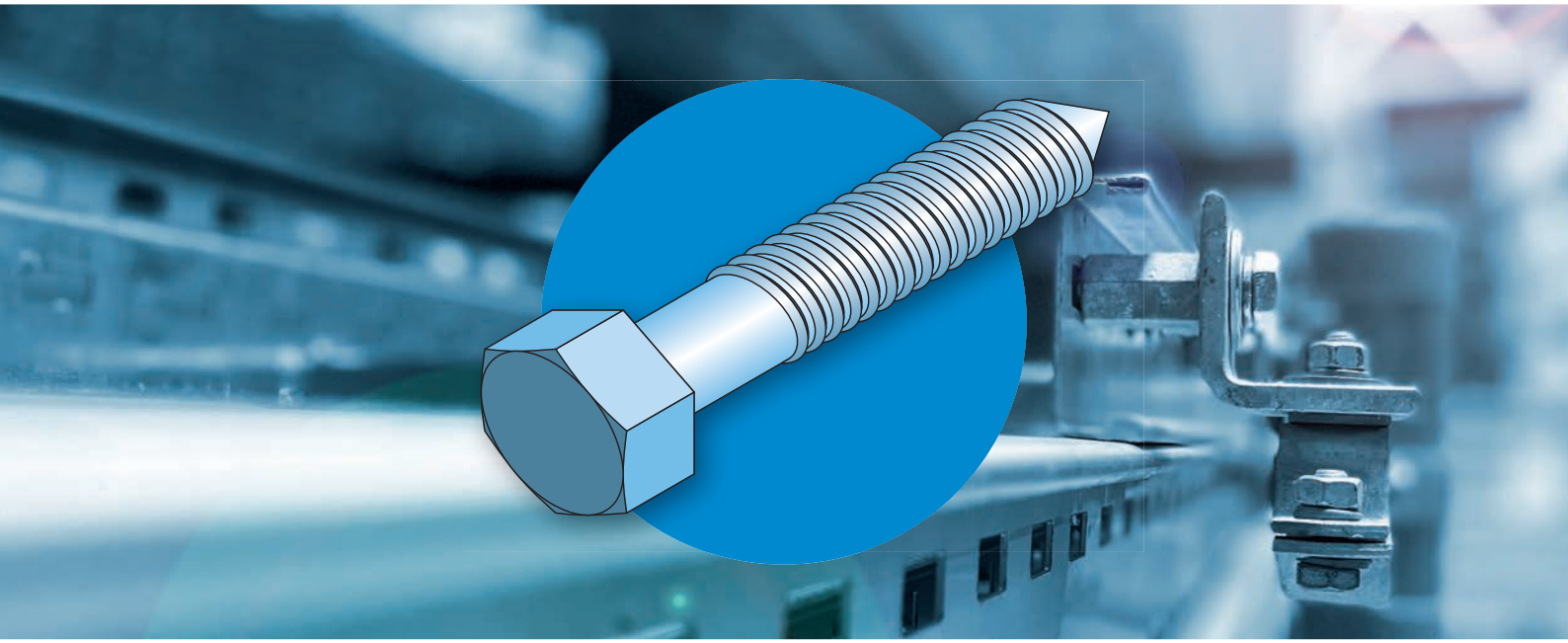

Mounting Systems
Fixing Material



Stay up to date!

Follow **@eurostrut** on social media and sign in to our newsletter:
www.eurostrut.com/en/newsletter

General conditions

- Eurostrut Support Systems & Solutions B.V. is not liable for cable management systems that are incorrectly installed or where different parts or maintenance methods are applied.
- Although the product information shown in this catalog is accurate and reliable, Eurostrut Support Systems & Solutions B.V. can not be held responsible and liable for inaccuracies.
- The performance data are specific and may be subject to variations due to normal manufacturing tolerances.
- Eurostrut Support Systems & Solutions B.V. reserves the right to change performance information or specifications at any time without notice.

2ba

The convenience of 2ba

Eurostrut's products are listed with all associated information in 2BA's central article database. Product, price and stock information must be continuously available in order to operate efficiently. The 2BA data pool offers the solution.
2ba.nl

The main advantages of 2BA:

- Design, calculate and order more efficiently because all product and price information comes from the same source.
- Data is directly available via the leading ERP software packages or your own custom system.
- You have your own net purchase prices based on Eurostrut's agreed purchasing conditions.

GECERTIFICEERD NCI ISO 9001

ISO 9001

Quality management is reflected in all processes within Eurostrut and ensures that we control them well and that our products and services meet the needs, requirements, wishes and specifications of our customers and other stakeholders.

Ensuring continuous improvement of quality is very important for ourselves and our clients.

DIN 933 / ISO 4017 | Hex Head Bolt

SPECIFICATIONS

- Other dimensions and strengths available on request.
- Surface finish:
  - Electro zinc plated 8.8 (EV)
  - Hot dip galvanized iso 8.8 (TI)
  - Stainless steel A2-70 / 304 (AA)
  - Stainless steel A4-70 / 316 (AZ)



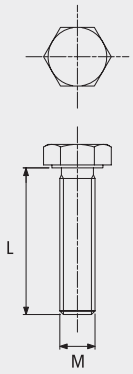

M		EV		TI		AA		AZ	MxL		kg/unit
M6	●	933EV06x12			●	933AA06x12	●	933AZ06x12	M6 x 12mm	200	0,0044
	●	933EV06x16	●	933TI06x16	●	933AA06x16	●	933AZ06x16	M6 x 16mm	200	0,0051
	●	933EV06x20	●	933TI06x20	●	933AA06x20	●	933AZ06x20	M6 x 20mm	200	0,0058
	●	933EV06x25	●	933TI06x25	●	933AA06x25	●	933AZ06x25	M6 x 25mm	200	0,0067
	●	933EV06x30	●	933TI06x30	●	933AA06x30	●	933AZ06x30	M6 x 30mm	200	0,0075
	●	933EV06x35			●	933AA06x35	●	933AZ06x35	M6 x 35mm	200	0,0084
	●	933EV06x40	●	933TI06x40	●	933AA06x40	●	933AZ06x40	M6 x 40mm	200	0,0092
	●	933EV06x50			●	933AA06x50	●	933AZ06x50	M6 x 50mm	200	0,0110
	●	933EV06x60			●	933AA06x60	●	933AZ06x60	M6 x 60mm	200	0,0127
M8	●	933EV08x16	●	933TI08x16	●	933AA08x16	●	933AZ08x16	M8 x 16mm	200	0,0110
	●	933EV08x20	●	933TI08x20	●	933AA08x20	●	933AZ08x20	M8 x 20mm	200	0,0123
	●	933EV08x25	●	933TI08x25	●	933AA08x25	●	933AZ08x25	M8 x 25mm	200	0,0139
	●	933EV08x30	●	933TI08x30	●	933AA08x30	●	933AZ08x30	M8 x 30mm	200	0,0150
	●	933EV08x35	●	933TI08x35	●	933AA08x35	●	933AZ08x35	M8 x 35mm	200	0,0171
	●	933EV08x40	●	933TI08x40	●	933AA08x40	●	933AZ08x40	M8 x 40mm	200	0,0203
	●	933EV08x50	●	933TI08x50	●	933AA08x50	●	933AZ08x50	M8 x 50mm	200	0,0218
	●	933EV08x60	●	933TI08x60	●	933AA08x60	●	933AZ08x60	M8 x 60mm	200	0,0250
	●	933EV08x80	●	933TI08x80	●	933AA08x80	●	933AZ08x80	M8 x 80mm	200	0,0310
M10	●	933EV10x20	●	933TI10x20	●	933AA10x20	●	933AZ10x20	M10 x 20mm	200	0,0212
	●	933EV10x25	●	933TI10x25	●	933AA10x25	●	933AZ10x25	M10 x 25mm	200	0,0237
	●	933EV10x30	●	933TI10x30	●	933AA10x30	●	933AZ10x30	M10 x 30mm	200	0,0262
	●	933EV10x35	●	933TI10x35	●	933AA10x35	●	933AZ10x35	M10 x 35mm	100	0,0287
	●	933EV10x40	●	933TI10x40	●	933AA10x40	●	933AZ10x40	M10 x 40mm	100	0,0312
	●	933EV10x50	●	933TI10x50	●	933AA10x50	●	933AZ10x50	M10 x 50mm	100	0,0362
	●	933EV10x60	●	933TI10x60	●	933AA10x60	●	933AZ10x60	M10 x 60mm	100	0,0413
	●	933EV10x80	●	933TI10x80	●	933AA10x80	●	933AZ10x80	M10 x 80mm	100	0,0513
	●	933EV10x100	●	933TI10x100	●	933AA10x100	●	933AZ10x100	M10 x 100mm	100	0,0613
M12	●	933EV12x20	●	933TI12x20	●	933AA12x20	●	933AZ12x20	M12 x 20mm	100	0,0333
	●	933EV12x25	●	933TI12x25	●	933AA12x25	●	933AZ12x25	M12 x 25mm	100	0,0341
	●	933EV12x30	●	933TI12x30	●	933AA12x30	●	933AZ12x30	M12 x 30mm	100	0,0377
	●	933EV12x35	●	933TI12x35	●	933AA12x35	●	933AZ12x35	M12 x 35mm	100	0,0413
	●	933EV12x40	●	933TI12x40	●	933AA12x40	●	933AZ12x40	M12 x 40mm	100	0,0449
	●	933EV12x50	●	933TI12x50	●	933AA12x50	●	933AZ12x50	M12 x 50mm	100	0,0520
	●	933EV12x60	●	933TI12x60	●	933AA12x60	●	933AZ12x60	M12 x 60mm	100	0,0582
	●	933EV12x80	●	933TI12x80	●	933AA12x80	●	933AZ12x80	M12 x 80mm	50	0,0736
	●	933EV12x100	●	933TI12x100	●	933AA12x100	●	933AZ12x100	M12 x 100mm	50	0,0880
M16	●	933EV16x25	●	933TI16x25	●	933AA16x25	●	933AZ16x25	M16 x 25mm	50	0,0702
	●	933EV16x30	●	933TI16x30	●	933AA16x30	●	933AZ16x30	M16 x 30mm	50	0,0769
	●	933EV16x35	●	933TI16x35	●	933AA16x35	●	933AZ16x35	M16 x 35mm	50	0,0835
	●	933EV16x40	●	933TI16x40	●	933AA16x40	●	933AZ16x40	M16 x 40mm	50	0,0902
	●	933EV16x50	●	933TI16x50	●	933AA16x50	●	933AZ16x50	M16 x 50mm	50	0,1030
	●	933EV16x60	●	933TI16x60	●	933AA16x60	●	933AZ16x60	M16 x 60mm	50	0,1170
	●	933EV16x80	●	933TI16x80	●	933AA16x80	●	933AZ16x80	M16 x 80mm	25	0,1440
	●	933EV16x100	●	933TI16x100	●	933AA16x100	●	933AZ16x100	M16 x 100mm	25	0,1700

● In stock ● Limited stock ● On request

| + 31 10 522 33 51 | info@eurostrut.com | eurostrut.com

DIN 84 / ISO 1207 | Slotted Cheese Head Machine Screw

SPECIFICATIONS

- Other dimensions and strengths available on request.
- Surface finish:
  - Electro zinc plated 4.8 (EV)
  - Stainless steel A2 / 304 (AA)
  - Stainless steel A4 / 316 (AZ)



M		EV		AA		AZ	MxL		kg/unit
	●	84EV06x12	●	84AA06x12	●	84AZ06x12	M6 x 12mm	200	0,0043
	●	84EV06x16	●	84AA06x16	●	84AZ06x16	M6 x 16mm	200	0,0050
	●	84EV06x20	●	84AA06x20	●	84AZ06x20	M6 x 20mm	200	0,0057
	●	84EV06x25	●	84AA06x25	●	84AZ06x25	M6 x 25mm	200	0,0066
M6	●	84EV06x30	●	84AA06x30	●	84AZ06x30	M6 x 30mm	200	0,0075
	●	84EV06x35	●	84AA06x35	●	84AZ06x35	M6 x 35mm	200	0,0083
	●	84EV06x40	●	84AA06x40	●	84AZ06x40	M6 x 40mm	200	0,0092
	●	84EV06x50	●	84AA06x50	●	84AZ06x50	M6 x 50mm	200	0,0109
	●	84EV06x60	●	84AA06x60	●	84AZ06x60	M6 x 60mm	200	0,0127
	●	84EV08x16	●	84AA08x16	●	84AZ08x16	M8 x 16mm	200	0,0098
	●	84EV08x20	●	84AA08x20	●	84AZ08x20	M8 x 20mm	200	0,0110
	●	84EV08x25	●	84AA08x25	●	84AZ08x25	M8 x 25mm	200	0,0127
	●	84EV08x30	●	84AA08x30	●	84AZ08x30	M8 x 30mm	200	0,0142
M8	●	84EV08x35	●	84AA08x35	●	84AZ08x35	M8 x 35mm	200	0,0158
	●	84EV08x40	●	84AA08x40	●	84AZ08x40	M8 x 40mm	200	0,0174
	●	84EV08x50	●	84AA08x50			M8 x 50mm	200	0,0206
	●	84EV08x60	●	84AA08x60			M8 x 60mm	200	0,0237
	●	84EV08x80	●	84AA08x80			M8 x 80mm	200	0,0300

● In stock ● Limited stock ● On request

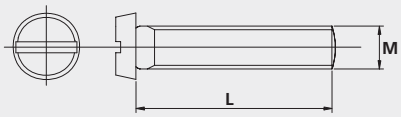

DIN 975 | Threaded Rod

SPECIFICATIONS

- Lengths 1, 2 and 3 meter.
- Other dimensions and strengths available on request.
- Surface finish:
  - Electro zinc plated 8.8 (EV)
  - Hot dip galvanized iso 8.8 (TI)
  - Stainless steel A2-70 / 304 (AA)
  - Stainless steel A4-70 / 316 (AZ)





M		EV		TI		AA		AZ	L		kg/ unit
	●	975EV06x1000			●	975AA06x1000	●	975AZ06x1000	1000mm	1	0,18
M6	●	975EV06x2000			●	975AA06x2000	●	975AZ06x2000	2000mm	1	0,36
	●	975EV06x3000			●	975AA06x3000	●	975AZ06x3000	3000mm	1	0,54
	●	975EV08x1000			●	975AA08x1000	●	975AZ08x1000	1000mm	1	0,34
M8	●	975EV08x2000			●	975AA08x2000	●	975AZ08x2000	2000mm	1	0,68
	●	975EV08x3000			●	975AA08x3000	●	975AZ08x3000	3000mm	1	1,02
	●	975EV10x1000	●	975TI10x1000	●	975AA10x1000	●	975AZ10x1000	1000mm	1	0,50
M10	●	975EV10x2000	●	975TI10x2000	●	975AA10x2000	●	975AZ10x2000	2000mm	1	1,00
	●	975EV10x3000	●	975TI10x3000	●	975AA10x3000	●	975AZ10x3000	3000mm	1	1,50
	●	975EV12x1000	●	975TI12x1000	●	975AA12x1000	●	975AZ12x1000	1000mm	1	0,73
M12	●	975EV12x2000	●	975TI12x2000	●	975AA12x2000	●	975AZ12x2000	2000mm	1	1,45
	●	975EV12x3000	●	975TI12x3000	●	975AA12x3000	●	975AZ12x3000	3000mm	1	2,19
	●	975EV16x1000	●	975TI16x1000	●	975AA16x1000	●	975AZ16x1000	1000mm	1	1,33
M16	●	975EV16x2000	●	975TI16x2000	●	975AA16x2000	●	975AZ16x2000	2000mm	1	2,66
	●	975EV16x3000	●	975TI16x3000	●	975AA16x3000	●	975AZ16x3000	3000mm	1	3,99

● In stock ● Limited stock ● On request

DIN 934 / ISO 4032 | Hex Nut

SPECIFICATIONS

- Other dimensions and strengths available on request.
- Surface finish:
  - Electro zinc plated (EV), Steel 8 DIN-EN-ISO 4032
  - Hot dip galvanized ISO (TI), Steel 8 DIN-EN-ISO 4032
  - Hot dip galvanized Oversized (TO), Steel 8
  - Stainless steel A2-70 / 304 (AA)
  - Stainless steel A4-70 / 316 (AZ)



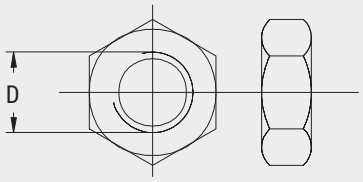

	EV		TI		TO		AA		AZ	D		kg/100
●	934EV06	●	934TI06			●	934AA06	●	934AZ06	M6	200	0,003
●	934EV08	●	934TI08	●	934TO08	●	934AA08	●	934AZ08	M8	200	0,005
●	934EV10	●	934TI10	●	934TO10	●	934AA10	●	934AZ10	M10	200	0,010
●	934EV12	●	934TI12	●	934TO12	●	934AA12	●	934AZ12	M12	200	0,017
●	934EV16	●	934TI16	●	934TO16	●	934AA16	●	934AZ16	M16	200	0,033

● In stock ● Limited stock ● On request

DIN 985 / ISO 10511 | Hex Lock Nut with Nylon Insert

SPECIFICATIONS

- Other dimensions and strengths available on request.
- Surface finish:
  - Electro zinc plated (EV), Steel 8 DIN-EN-ISO 4032
  - Hot dip galvanized ISO (TI), Steel 8 DIN-EN-ISO 4032
  - Stainless steel A2-70 / 304 (AA)
  - Stainless steel A4-70 / 316 (AZ)



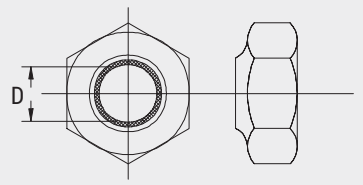

	EV		TI		AA		AZ	D		kg/100
●	985EV06			●	985AA06	●	985AZ06	M6	200	0,0024
●	985EV08			●	985AA08	●	985AZ08	M8	200	0,0051
●	985EV10	●	985TI10	●	985AA10	●	985AZ10	M10	200	0,0106
●	985EV12	●	985TI12	●	985AA12	●	985AZ12	M12	200	0,0172
●	985EV16	●	985TI16	●	985AA16	●	985AZ16	M16	200	0,0340

● In stock ● Limited stock ● On request

DIN 6923 / ISO 4161 | Hex Flange Nut Serrated

SPECIFICATIONS

- Other dimensions and strengths available on request.
- Surface finish:
  - Electro zinc plated (EV), Steel 8 DIN-EN-ISO 4032
  - Hot dip galvanized ISO (TI) **Not serrated**, Steel 8 DIN-EN-ISO 4032
  - Stainless steel A2-70 / 304 (AA)
  - Stainless steel A4-70 / 316 (AZ)



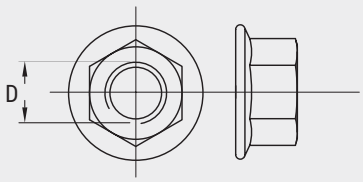

	EV		TI		AA		AZ	D		kg/100
●	6923EV06			●	6923AA06	●	6923AZ06	M6	200	0,003
●	6923EV08	●	6923TI08	●	6923AA08	●	6923AZ08	M8	200	0,007
●	6923EV10	●	6923TI10	●	6923AA10	●	6923AZ10	M10	200	0,014
●	6923EV12	●	6923TI12	●	6923AA12			M12	200	0,023
●	6923EV16	●	6923TI16					M16	200	0,032

● In stock ● Limited stock ● On request

DIN 6334 | Hexagonal Rod Coupler

SPECIFICATIONS

- Surface finish:
  - Electro zinc plated (EV)
  - Hot dip galvanized ISO 8.8 (TI)
  - Stainless steel A2 / 304 (AA)
  - Stainless steel A4 / 316 (AZ)



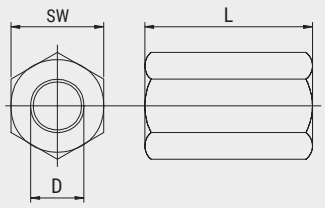

	EV		TI		AA		AZ	D	L mm	SW mm		kg/100
●	6334EV06			●	6334AA06	●	6334AZ06	M6	18	10	100	0,0083
●	6334EV08			●	6334AA08	●	6334AZ08	M8	24	13	100	0,0171
●	6334EV10	●	6334TI10	●	6334AA10	●	6334AZ10	M10	30	17	100	0,0300
●	6334EV12	●	6334TI12	●	6334AA12	●	6334AZ12	M12	36	19	100	0,0572
●	6334EV16	●	6334TI16	●	6334AA16	●	6334AZ16	M16	48	24	50	0,1137

● In stock ● Limited stock ● On request

DIN 125A / ISO 7089 & DIN 126 / ISO 7091 | Flat Washer

SPECIFICATIONS

- Other dimensions available on request.
- Surface finish:
  - Electro zinc plated (EV)
  - Hot dip galvanized (TV)
  - Stainless steel A2 / 304 (AA)
  - Stainless steel A4 / 316 (AZ)



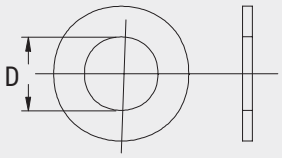

	EV		TV		AA		AZ	D		kg/100
●	125EV06	●	126TV06	●	125AA06	●	125AZ06	M6	200	0,0010
●	125EV08	●	126TV08	●	125AA08	●	125AZ08	M8	200	0,0018
●	125EV10	●	126TV10	●	125AA10	●	125AZ10	M10	200	0,0036
●	125EV12	●	126TV12	●	125AA12	●	125AZ12	M12	200	0,0063
●	125EV16	●	126TV16	●	125AA16	●	125AZ16	M16	200	0,0113

● In stock ● Limited stock ● On request

DIN 127 | Spring Washer

SPECIFICATIONS

- Other dimensions available on request.
- Surface finish:
  - Electro zinc plated (EV)
  - Hot dip galvanized (TV)
  - Stainless steel A2 / 304 (AA)
  - Stainless steel A4 / 316 (AZ)



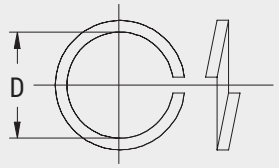

	EV		TV		AA		AZ	D		kg/100
●	127EV06	●	127TV06	●	127AA06	●	127AZ06	M6	200	0,0010
●	127EV08	●	127TV08	●	127AA08	●	127AZ08	M8	200	0,0020
●	127EV10	●	127TV10	●	127AA10	●	127AZ10	M10	200	0,0030
●	127EV12	●	127TV12	●	127AA12	●	127AZ12	M12	200	0,0040
●	127EV16	●	127TV16	●	127AA16	●	127AZ16	M16	200	0,0090

● In stock ● Limited stock ● On request

DIN 9021 / ISO 7093 | Large Washer

SPECIFICATIONS

- Other dimensions available on request.
- Surface finish:
  - Electro zinc plated (EV)
  - Hot dip galvanized (TV)
  - Stainless steel A2 / 304 (AA)
  - Stainless steel A4 / 316 (AZ)



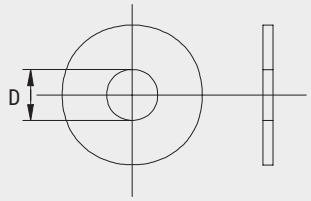

	EV		TV		AA		AZ	D		kg/100
●	9021EV06	●	9021TV06	●	9021AA06	●	9021AZ06	M6	200	0,0030
●	9021EV08	●	9021TV08	●	9021AA08	●	9021AZ08	M8	200	0,0070
●	9021EV10	●	9021TV10	●	9021AA10	●	9021AZ10	M10	200	0,0120
●	9021EV12	●	9021TV12	●	9021AA12	●	9021AZ12	M12	200	0,0220
●	9021EV16	●	9021TV16	●	9021AA16	●	9021AZ16	M16	200	0,0410

● In stock ● Limited stock ● On request

DIN 403 | Extra Large Washer

SPECIFICATIONS

- Surface finish:
  - Electro zinc plated (EV)

	EV	D		kg/100
●	403EV08	M8	200	0,0280
●	403EV10	M10	200	0,0273
●	403EV12	M12	200	0,0262

● In stock ● Limited stock ● On request



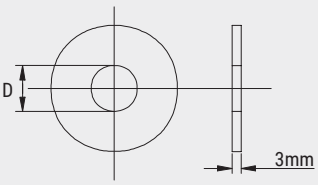

Nord-Lock® Washer

SPECIFICATIONS

Nord-Lock washers secure bolted joints with tension instead of friction.

- Steel washers with zinc flake coating Delta Protekt® (zinc-flake coating), NL3 – NL42 (standard sizes) and NL45 – NL130 (upon request).
- Stainless steel (EN 1.4404 / AISI 316L) washers, NL3ss – NL42ss (standard sizes) and NL45ss – NL80ss (upon request).



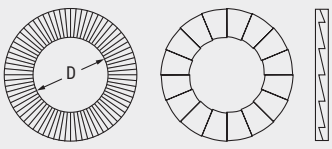

Application

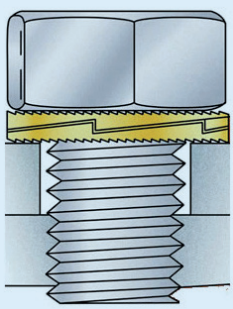

	Delta Protect		SS	D		kg/100
●	NL6	●	NL6SS	M6	200	0,0010
●	NL8	●	NL8SS	M8	200	0,0020
●	NL10	●	NL10SS	M10	200	0,0020
●	NL12	●	NL12SS	M12	200	0,0030
●	NL16	●	NL16SS	M16	200	0,0070

● In stock ● Limited stock ● On request

DIN 571 | Hex Head Wood Screw

SPECIFICATIONS

- Other dimensions and strengths available on request.
- Surface finish:
  - Electro zinc plated 4.8 (EV)
  - Hot dip galvanized iso 4.8 (TV)



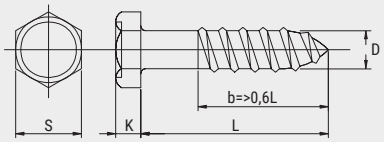

M		EV		TV	D mm	L mm	S mm	K mm		kg/unit
M6	●	571EV06x40	●	571TV06x40	6	40	10	4	200	0,0082
	●	571EV06x50	●	571TV06x50	6	50	10	4	200	0,0096
	●	571EV06x60	●	571TV06x60	6	60	10	4	200	0,0112
	●	571EV06x70	●	571TV06x70	6	70	10	4	200	0,0126
	●	571EV06x80	●	571TV06x80	6	80	10	4	200	0,0140
	●	571EV06x100	●	571TV06x100	6	100	10	4	200	0,0168
M8	●	571EV08x40	●	571TV08x40	8	40	13	5.5	200	0,0156
	●	571EV08x50	●	571TV08x50	8	50	13	5.5	200	0,0182
	●	571EV08x60	●	571TV08x60	8	60	13	5.5	100	0,0209
	●	571EV08x70	●	571TV08x70	8	70	13	5.5	100	0,0236
	●	571EV08x80	●	571TV08x80	8	80	13	5.5	100	0,0265
	●	571EV08x100	●	571TV08x100	8	100	13	5.5	100	0,0320
M10	●	571EV10x40	●	571TV10x40	10	40	17	7	100	0,0280
	●	571EV10x60	●	571TV10x60	10	60	17	7	100	0,0365
	●	571EV10x80	●	571TV10x80	10	80	17	7	50	0,0452
	●	571EV10x100	●	571TV10x100	10	100	17	7	50	0,0540
	●	571EV10x120	●	571TV10x120	10	120	17	7	50	0,0622
M12	●	571EV12x40	●	571TV12x40	12	40	19	8	100	0,0392
	●	571EV12x60	●	571TV12x60	12	60	19	8	100	0,0518
	●	571EV12x80	●	571TV12x80	12	80	19	8	50	0,0645
	●	571EV12x100	●	571TV12x100	12	100	19	8	50	0,0771
	●	571EV12x120	●	571TV12x120	12	120	19	8	50	0,0895

● In stock ● Limited stock ● On request





How can we **assist you?**

We are happy to collaborate with you on your projects. What is the optimal choice for material usage? Should we deliver all at once, or in stages? Is assembly or cutting required? Contact our sales team for a appointment.

Whether you want to place an order or prefer to receive a quote first, if you have questions about delivery options or our transportation service, feel free to get in touch – we are here to assist you.

You can reach our sales team on weekdays from 8.00 to 17.00 hrs at **+31 (0)10 522 33 51** or **info@eurostrut.com**.

For more information or to use our quick quote tool, visit **www.eurostrut.com**.



Eurostrut®

Cable Management Systems & Solutions

Van Heekstraat 18 | 3125 BN Schiedam | The Netherlands
+31 10 522 33 51 | info@eurostrut.com



This catalog is printed on 100% recycled FSC paper. Additionally, we further offset our CO2 emissions by planting **8 trees** within the ***Trees for All*** project in the tropical rainforests of Costa Rica.

© 2024 Eurostrut BV - V.2024.01