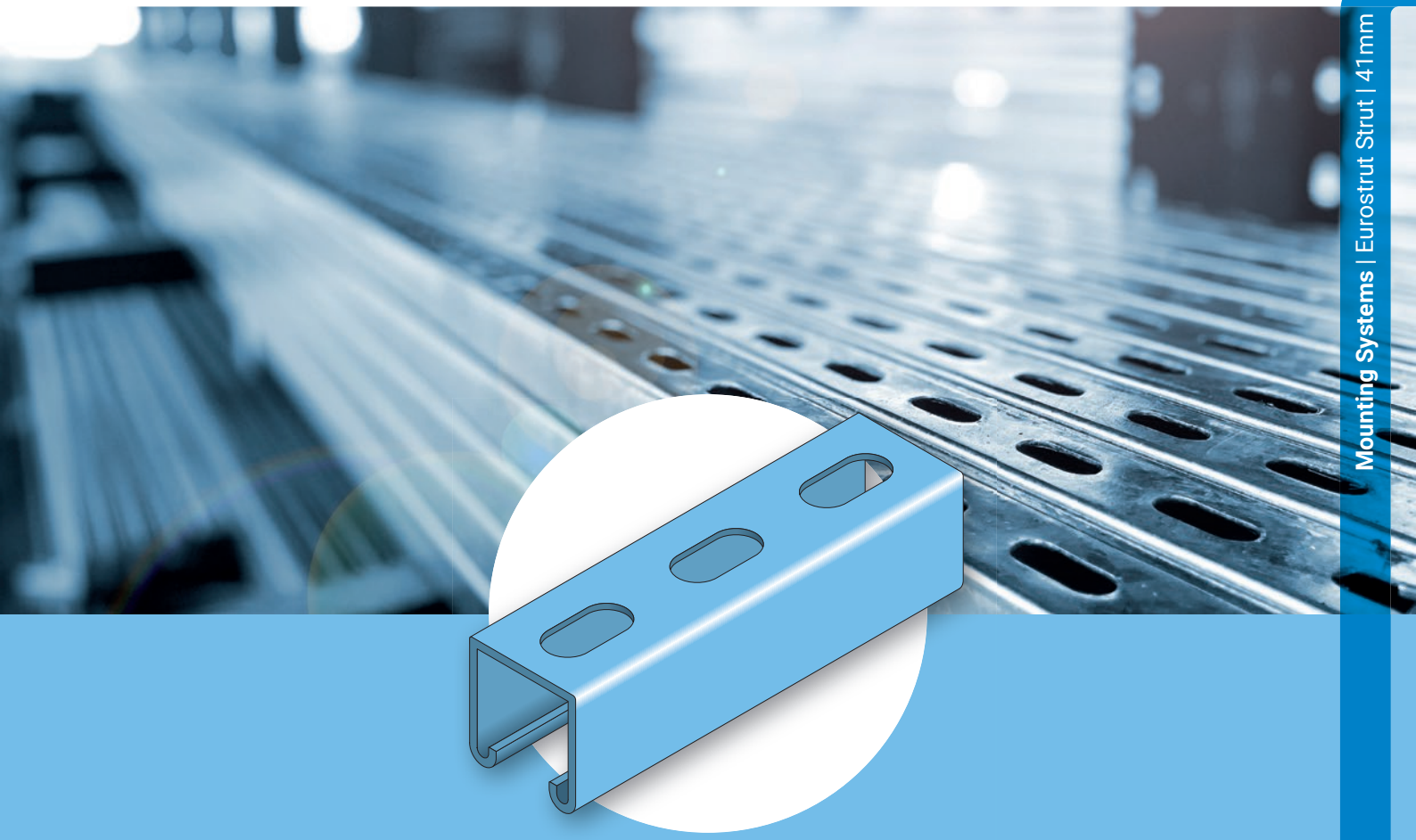

Eurostrut Catalog
Mounting Systems
Eurostrut Strut
41mm

Eurostrut®
Cable Management Systems & Solutions

That's why Eurostrut

Eurostrut manufactures and supplies **cable support** and **strut mounting systems** for use in demanding environments. We supply installation companies and other technically oriented businesses. Our products are used in markets such as offshore, chemical, petrochemical, heavy industry, energy, and combined heat and power plants. With more than 20 years of knowledge and experience, we are happy to advise you on the most suitable solution for your project.

Customized solutions: more than **20 YEARS** experience

With more than 20 years of knowledge and experience, Eurostrut has become a trusted name in the market. Are you facing challenges and in need of tailored advice? No problem. We provide customized solutions for every challenge.

Small-scale and **INVOLVED**

As an independent organization, we have a small team of committed employees who are always ready to support you. With short lines of communication and dedicated contact persons, we can assist you quickly and efficiently.

CO-ENGINEERING & assembly

Our co-engineering department helps develop efficient cable support solutions based on project requirements and technical drawings. In addition, our in-house assembly and sawing services help reduce installation time on site and ensure a faster, more efficient installation process.

High quality **OWN BRAND**

All our products meet the highest requirements and are subjected to an extensive inspection upon arrival at our warehouse in Schiedam (NL). Where necessary, products are adjusted and finished to meet our requirements. Products from our own product line are also hot-dip galvanized to a very high degree. Depending on product type, 80 to 160 µm.

Competitive **PRICING**

At Eurostrut we supply and produce the best quality cable support systems and solutions at the most competitive prices. With our own brand you get high quality at low cost. We also supply other brands at sharp prices. Request a quotation today!

Your total supplier with **A LARGE STOCK**

We are a total supplier of cable support systems and solutions. We offer a very complete range, from complete installations to loose mounting materials. With a large stock in our warehouse in Schiedam (NL), we can meet every need.



High quality solutions for your industry

Eurostrut supplies high-load cable support systems in various markets such as **industry, chemicals, energy, infrastructure, utility construction, maritime and offshore.** Every market, every segment, every customer has wishes and challenges when it comes to the transit of energy and data. From large spans and cable weights to large temperature differences and moisture. Eurostrut has a suitable solution for every need and situation.

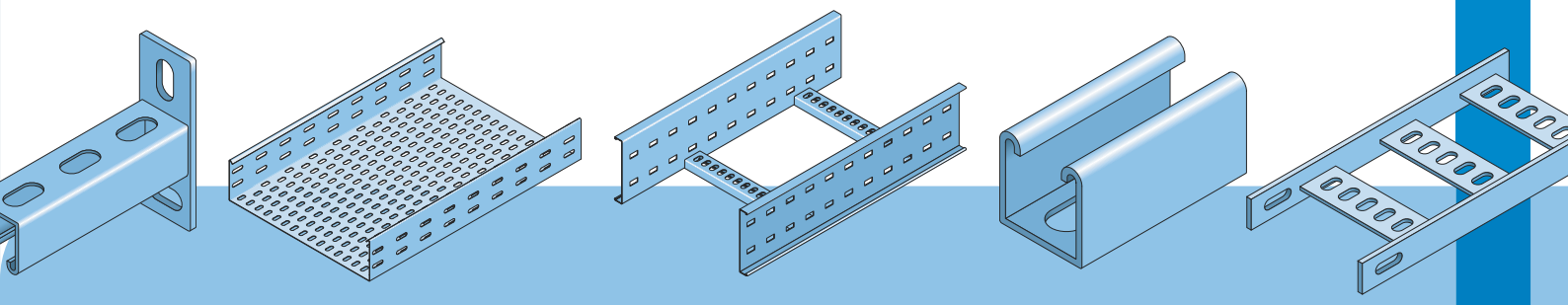

The Convenience of 2BA

For installation companies and other technically oriented businesses, fast access to product, pricing, and stock information is essential for efficient operations. The 2BA data pool provides the perfect solution. Eurostrut products, including all related information, are stored in the central article database of 2BA.

Key Advantages of 2BA:

- More efficient designing, estimating, and ordering, because all product and pricing information comes from a single source.
- Data is directly available through leading ERP software packages or your own customized system.
- Access to your own net purchase prices based on the purchasing agreements made with Eurostrut.

Eurostrut is **ISO 9001 certified**, ensuring quality management throughout all processes to meet customer requirements and specifications.

By achieving **Level 3 certification** on the **CO2 Performance Ladder**, Eurostrut demonstrates its commitment to environmentally responsible operations and promoting a healthy living environment.

For 2024, Eurostrut was awarded a **Silver Medal** by **EcoVadis** for its performance in Corporate Social Responsibility (CSR) and achieved a strong sustainability score of 70/100.



Your total supplier of Cable Management Systems & Solutions

Cable Ladders | Cable Trays |
Marine Ladders | Conduit | Pipe Clamps |
Strut Mounting Systems **& more!**

Visit eurostrut.com for our complete range

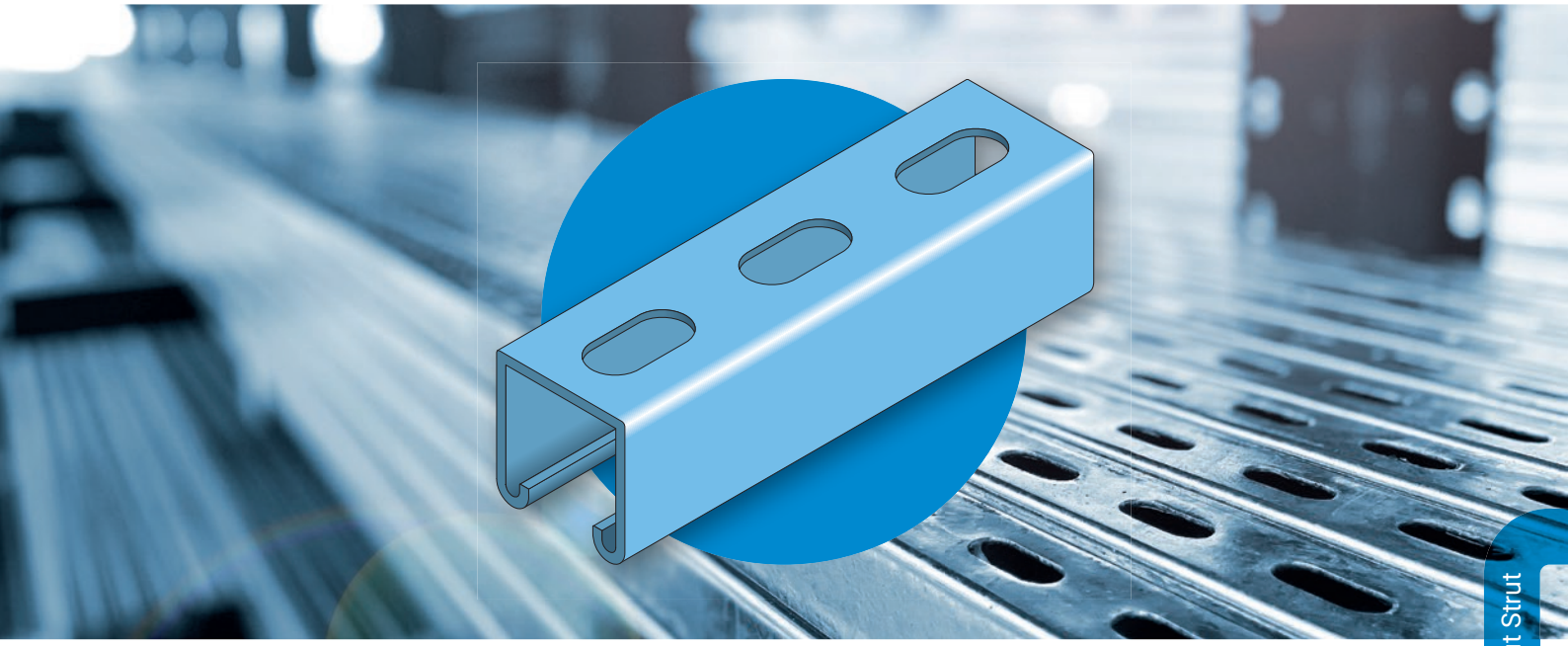

Mounting Systems
Eurostrut Strut
For light, medium and heavy duty applications with a broad range of accessories.

General specifications
- The Eurostrut strut system is manufactured in accordance with BS EN 61537 / IEC 61537.
- Standard material is carbon steel, standard surface finish is hot dip galvanized (HDG), in accordance with NEN-EN-ISO 1461.
- Thickness layer for strut channels (and most accessories) is 45 to 55 µm.
- (On request) most materials are also available in:
  - Pre galvanized (PG).
  - Stainless steel A4 / 316L (SS).
  - Stainless steel A2 / 304 (SS304).
  - Plain oil finished (black) (POF).

General conditions
- Eurostrut Support Systems & Solutions B.V. is not liable for strut channels and accessories that are incorrectly installed or where different parts or maintenance methods are applied.
- Although the product information shown in this catalog is accurate and reliable, Eurostrut Support Systems & Solutions B.V. can not be held responsible and liable for inaccuracies.
- The performance data are specific and may be subject to variations due to normal manufacturing tolerances.
- Eurostrut Support Systems & Solutions B.V. reserves the right to change performance information or specifications at any time without notice.

2ba

The convenience of 2ba
Eurostrut's products are listed with all associated information in 2BA's central article database. Product, price and stock information must be continuously available in order to operate efficiently. The 2BA data pool offers the solution.
2ba.nl

The main advantages of 2BA:
- Design, calculate and order more efficiently because all product and price information comes from the same source.
- Data is directly available via the leading ERP software packages or your own custom system.
- You have your own net purchase prices based on Eurostrut's agreed purchasing conditions.

Eurostrut is **ISO 9001 certified**, ensuring quality management across all processes to meet customer requirements and specifications.

By achieving **step 3** certification on the **CO_2 Performance Ladder**, Eurostrut demonstrates its commitment to environmental responsibility and fostering a healthy living environment.

ES3300 | Eurostrut | Plain Strut Channel 21x41mm

SPECIFICATIONS

- For light and medium duty applications.
- Available in:
  - Hot dip galvanized (HDG) carbon steel, in accordance with NEN-EN-ISO 1461.
    - Thickness layer 45 to 55 µm.
  - Pre galvanized (PG).
  - Stainless steel A4 / 316L (SS).
  - Plain oil finished (black) (POF).
- Length 6 meter.

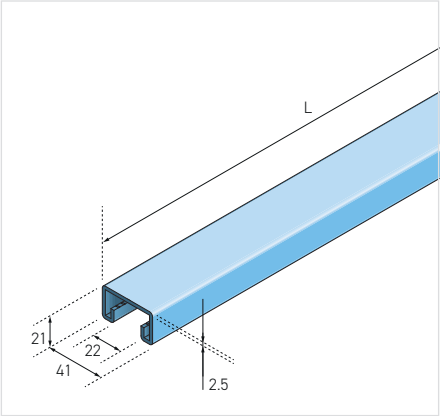

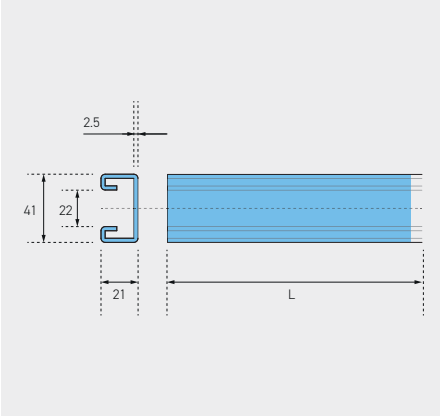

	Article number	L mm	AxB mm	C mm	S mm		kg/ unit
●	ES3300HDG	6	21x41	22	2,5	1	10,60
●	ES3300PG	6	21x41	22	2,5	1	10,20
●	ES3300SS	6	21x41	22	2,5	1	10,20
●	ES3300POF	6	21x41	22	2,5	1	10,20

● In stock ● Limited stock ● On request

σ_{zul}=160 N/mm
f_{zul}=l/200

LOAD DATA

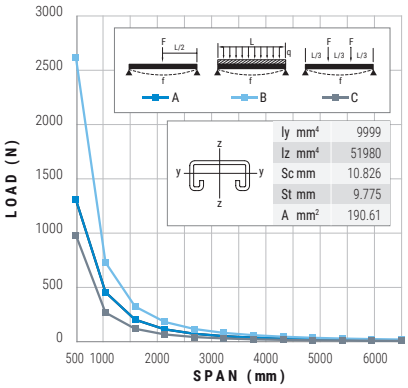

ES3300T | Eurostrut | Slotted Strut Channel 21x41mm

SPECIFICATIONS

- For light and medium duty applications.
- Available in:
  - Hot dip galvanized (HDG) carbon steel, in accordance with NEN-EN-ISO 1461.
    - Thickness layer 45 to 55 µm.
  - Pre galvanized (PG).
  - Stainless steel A4 / 316L (SS).
  - Stainless steel A2 / 304 (SS304).
  - Plain oil finished (black) (POF).
- Length 3 and 6 meter.
- Slots 14x30mm, every 50mm.

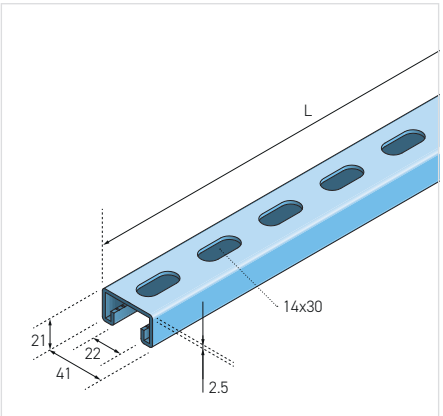

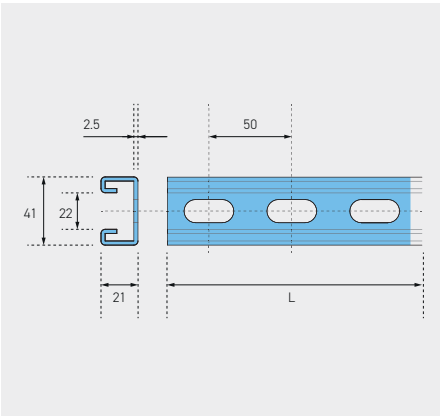

	Article number	L mm	AxB mm	C mm	S mm	DxE mm	H mm		kg/ unit
●	ES3300THDG3M	3	21x41	22	2,5	14x30	50	1	5,30
●	ES3300THDG	6	21x41	22	2,5	14x30	50	1	10,60
●	ES3300TPG3M	3	21x41	22	2,0	14x30	50	1	5,10
●	ES3300TPG	6	21x41	22	2,0	14x30	50	1	10,20
●	ES3300TSS	6	21x41	22	2,0	14x30	50	1	10,20
●	ES3300TSS304	6	21x41	22	2,0	14x30	50	1	10,20
●	ES3300TPOF	6	21x41	22	2,0	14x30	50	1	10,20

● In stock ● Limited stock ● On request

σ_{zul}=160 N/mm
f_{zul}=l/200

LOAD DATA

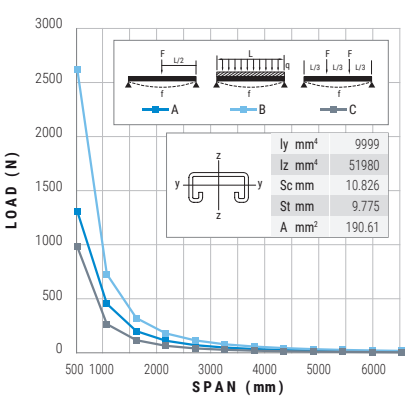

| + 31 10 522 33 51 | info@eurostrut.com | eurostrut.com

ES1000 | Eurostrut | Plain Strut Channel 41x41mm

SPECIFICATIONS

- For medium duty applications.
- Available in:
  - Hot dip galvanized (HDG) carbon steel, in accordance with NEN-EN-ISO 1461.
    - Thickness layer 45 to 55 µm.
  - Pre galvanized (PG).
  - Stainless steel A4 / 316L (SS).
  - Plain oil finished (black) (POF).
- Length 3 and 6 meter.

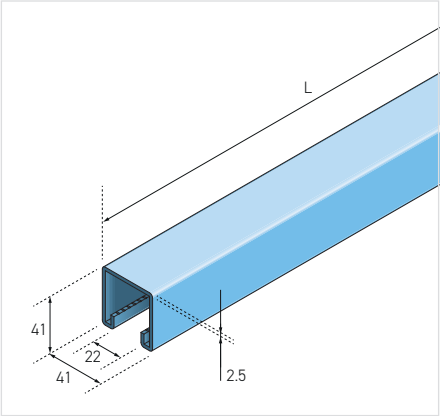

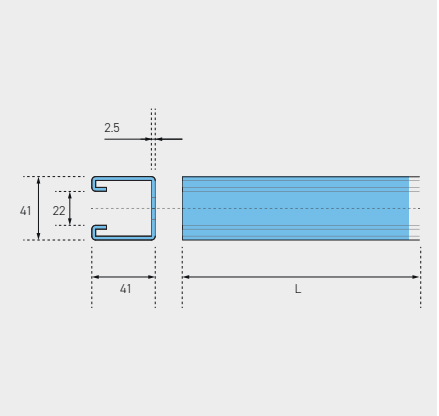

	Article number	L mm	AxBxS mm	C mm	S mm		kg/ unit
●	ES1000HDG3M	3	41x41	22	2,5	1	8,19
●	ES1000HDG	6	41x41	22	2,5	1	16,38
●	ES1000PG	6	41x41	22	2,5	1	15,78
●	ES1000SS	6	41x41	22	2,5	1	15,78
●	ES1000POF	6	41x41	22	2,5	1	15,78

● In stock ● Limited stock ● On request

LOAD DATA

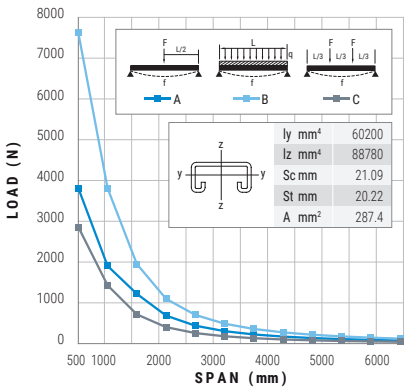

σ_{zul}=160 N/mm
f_{zul}=l/200

ES1000T | Eurostrut | Slotted Strut Channel 41x41x2,5mm

SPECIFICATIONS

- For medium duty applications.
- Available in:
  - Hot dip galvanized (HDG) carbon steel, in accordance with NEN-EN-ISO 1461.
    - Thickness layer 45 to 55 µm.
  - Pre galvanized (PG).
  - Stainless steel A4 / 316L (SS).
  - Stainless steel A2 / 304 (SS304).
  - Plain oil finished (black) (POF).
- Length 3 and 6 meter.
- Slots 14x30mm, every 50mm.

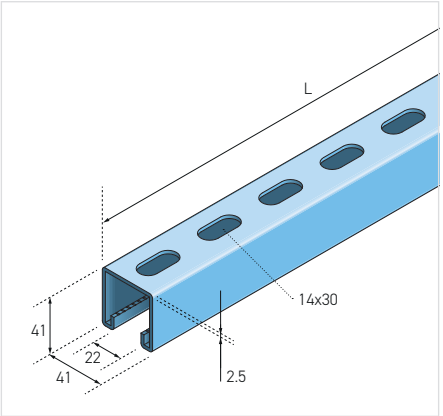

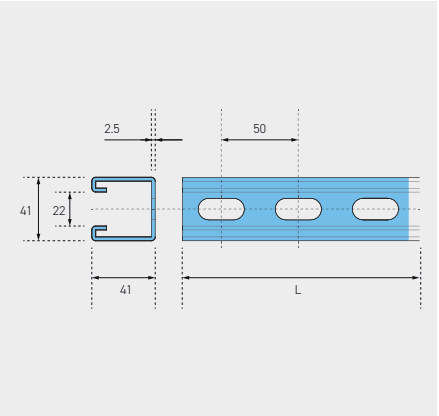

	Article number	L mm	AxB mm	C mm	S mm	DxE mm	H mm		kg/ unit
●	ES1000THDG3M	3	41x41	22	2,5	14x30	50	1	7,80
●	ES1000THDG	6	41x41	22	2,5	14x30	50	1	15,60
●	ES1000TPG3M	3	41x41	22	2,5	14x30	50	1	7,65
●	ES1000TPG	6	41x41	22	2,5	14x30	50	1	15,30
●	ES1000TSS3M	6	41x41	22	2,5	14x30	50	1	7,65
●	ES1000TSS	6	41x41	22	2,5	14x30	50	1	15,30
●	ES1000TSS304	6	41x41	22	2,5	14x30	50	1	15,30
●	ES1000TPOF	6	41x41	22	2,5	14x30	50	1	15,30

● In stock ● Limited stock ● On request

LOAD DATA

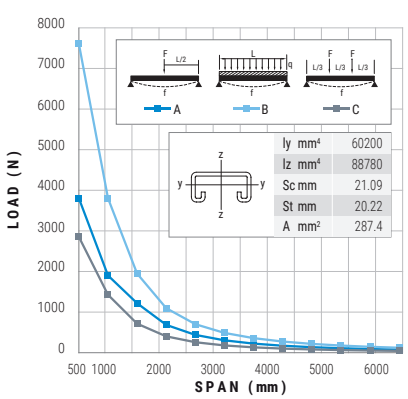

σ_{zul}=160 N/mm
f_{zul}=l/200

ES5500T | Eurostrut | Slotted Strut Channel 62x41mm

SPECIFICATIONS

- For heavy duty applications.
- Available in:
  - Hot dip galvanized (HDG) carbon steel, in accordance with NEN-EN-ISO 1461.
    - Thickness layer 45 to 55 µm.
  - Pre galvanized (PG).
- Length 6 meter.
- Slots 14x27mm, every 50mm.

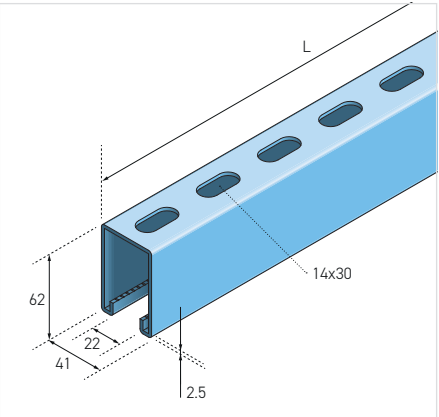

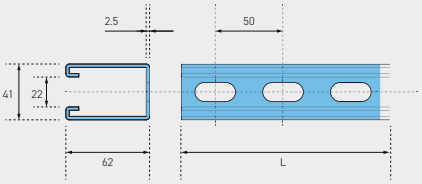

	Article number	L mm	AxB mm	C mm	S mm	DxE mm	H mm		kg/ unit
●	ES5500THDG	6	62x41	22	2,5	14x30	50	1	22,40
●	ES5500TPG	6	62x41	22	2,5	14x30	50	1	22,00

● In stock ● Limited stock ● On request

LOAD DATA

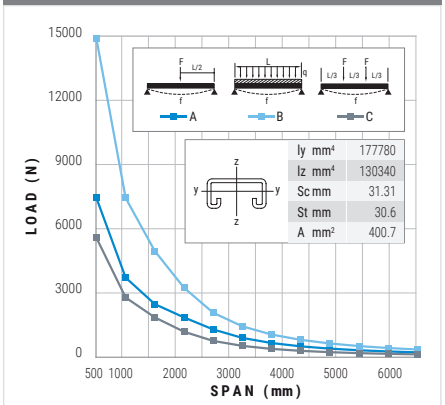

σ_{zul}=160 N/mm
f_{zul}=l/200

ES5000T | Eurostrut | Slotted Strut Channel 82x41mm

SPECIFICATIONS

- For heavy duty applications.
- Available in:
  - Hot dip galvanized (HDG) carbon steel, in accordance with NEN-EN-ISO 1461.
    - Thickness layer 45 to 55 µm.
  - Pre galvanized (PG).
- Length 6 meter.
- Slots 14x27mm, every 50mm.

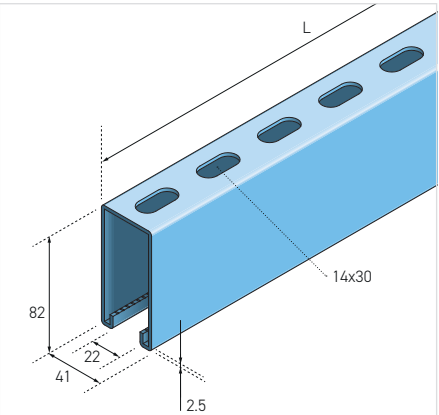

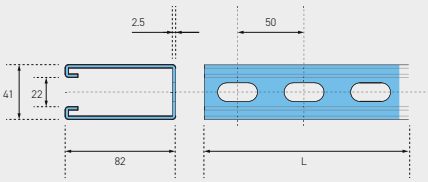

	Article number	L mm	AxB mm	C mm	S mm	DxE mm	H mm		kg/ unit
●	ES5000THDG	6	82x41	22	2,5	14x30	50	1	
●	ES5000TPG	6	82x41	22	2,5	14x30	50	1	

● In stock ● Limited stock ● On request

| + 31 10 522 33 51 | info@eurostrut.com | eurostrut.com

ES3301 | Eurostrut | Plain Strut Channel 2x(21x41mm)

SPECIFICATIONS

- For medium duty applications.
- Spot welded seam.
- Available in:
  - Hot dip galvanized (HDG) carbon steel, in accordance with NEN-EN-ISO 1461.
    - Thickness layer 45 to 55 µm.
- Length 6 meter.

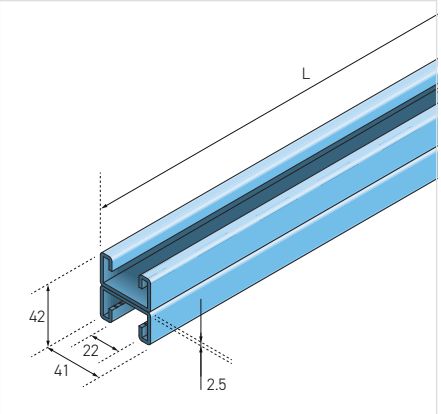

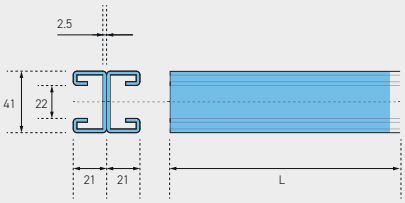

	Article number	L mm	AxBxS mm	C mm	S mm	H mm		kg/ unit
●	ES3301HDG	6	21x41x2,5	22	2,5	50	1	

● In stock ● Limited stock ● On request

ES3301T | Eurostrut | Slotted Strut Channel 2x(21x41mm)

SPECIFICATIONS

- For medium duty applications.
- Spot welded seam.
- Available in:
  - Hot dip galvanized (HDG) carbon steel, in accordance with NEN-EN-ISO 1461.
    - Thickness layer 45 to 55 µm.
  - Pre galvanized (PG).
  - Stainless steel A4 / 316L (SS).
  - Stainless steel A2 / 304 (SS304).
- Length 6 meter.
- Slots 11x25mm, every 50mm.

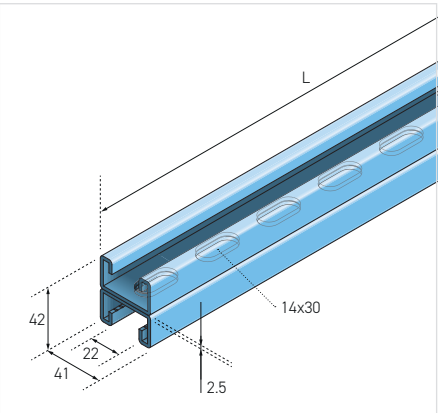

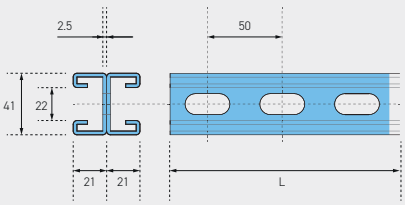

	Article number	L mm	AxB mm	C mm	S mm	DxE mm	H mm		kg/ unit
●	ES3301THDG	6	21x41	22	2,5	14x30	50	1	21,20
●	ES3301TPG	6	21x41	22	2,5	14x30	50	1	20,40
●	ES3301TSS	6	21x41	22	2,5	14x30	50	1	20,40
●	ES3301TSS304	6	21x41	22	2,5	14x30	50	1	20,40

● In stock ● Limited stock ● On request

LOAD DATA

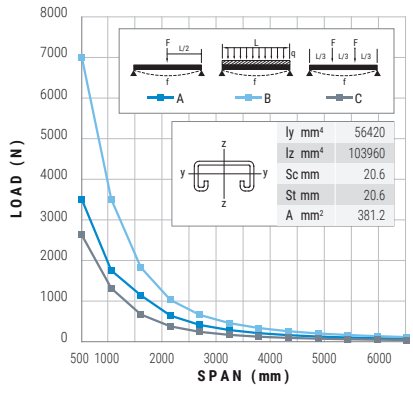

σ_{zul}=160 N/mm
f_{zul}=l/200

ES1001 | Eurostrut | Plain Strut Channel 2x(41x41mm)

SPECIFICATIONS

- For heavy duty applications.
- Spot welded seam.
- Available in:
  - Hot dip galvanized (HDG) carbon steel, in accordance with NEN-EN-ISO 1461.
    - Thickness layer 45 to 55 µm.
  - Pre galvanized (PG).
  - Stainless steel A4 / 316L (SS).
- Length 6 meter.

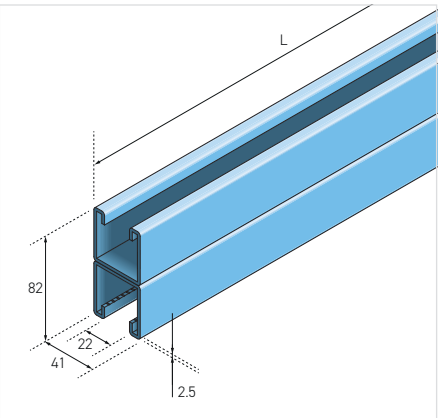

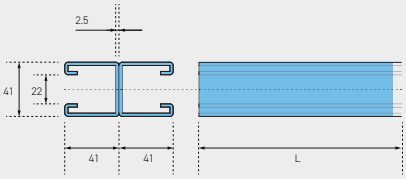

	Article number	L mm	AxB mm	C mm	S mm	H mm		kg/ unit
●	ES1001HDG	6	41x41	22	2,5	50	1	
●	ES1001PG	6	41x41	22	2,5	50	1	
●	ES1001SS	6	41x41	2	2,5	50	1	

● In stock ● Limited stock ● On request

ES1001T | Eurostrut | Slotted Strut Channel 2x(41x41mm)

SPECIFICATIONS

- For heavy duty applications.
- Spot welded seam.
- Available in:
  - Hot dip galvanized (HDG) carbon steel, in accordance with NEN-EN-ISO 1461.
    - Thickness layer 45 to 55 µm.
  - Pre galvanized (PG).
  - Stainless steel A4 / 316L (SS).
  - Stainless steel A2 / 304 (SS304).
- Length 3 and 6 meter.
- Slots 12,8x25mm, every 50mm.

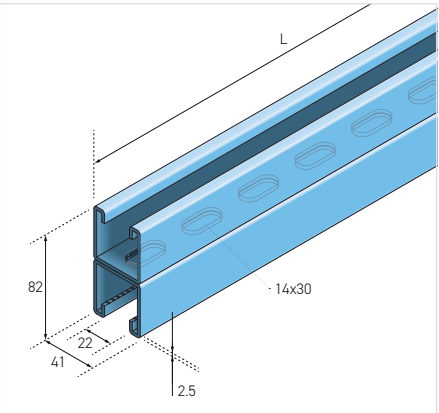

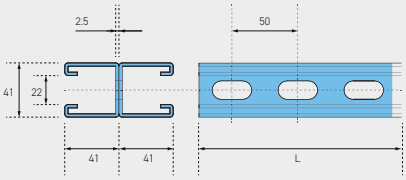

	Article number	L mm	AxB mm	C mm	S mm	DxE mm	H mm		kg/ unit
●	ES1001THDG3M	3	41x41	22	2,5	14x30	50	1	15,80
●	ES1001THDG	6	41x41	22	2,5	14x30	50	1	31,60
●	ES1001TPG	6	41x41	22	2,5	14x30	50	1	31,20
●	ES1001TSS	6	41x41	22	2,5	14x30	50	1	31,20
●	ES1001TSS304	6	41x41	22	2,5	14x30	50	1	31,20

● In stock ● Limited stock ● On request

σ_{zul}=160 N/mm
f_{zul}=l/200

LOAD DATA

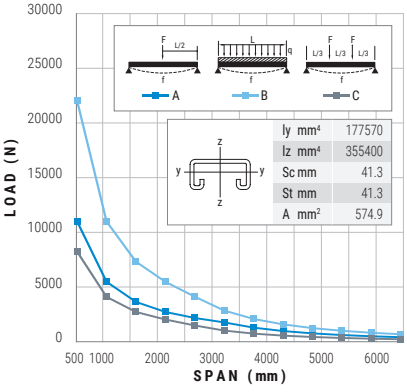

| + 31 10 522 33 51 | info@eurostrut.com | eurostrut.com

ES5001 | Eurostrut | Plain Strut Channel 2x(82x41mm)

SPECIFICATIONS

- For heavy duty applications.
- Spot welded seam.
- Available in:
  - Hot dip galvanized (HDG) carbon steel, in accordance with NEN-EN-ISO 1461.
    - Thickness layer 45 to 55 µm.
- Length 6 meter.

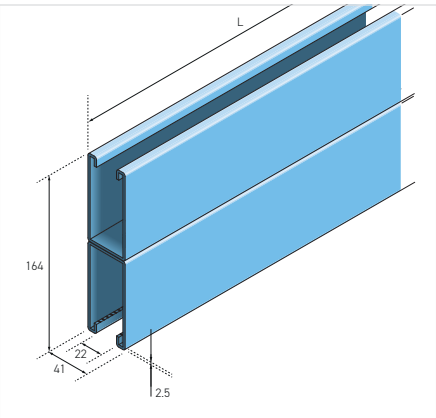

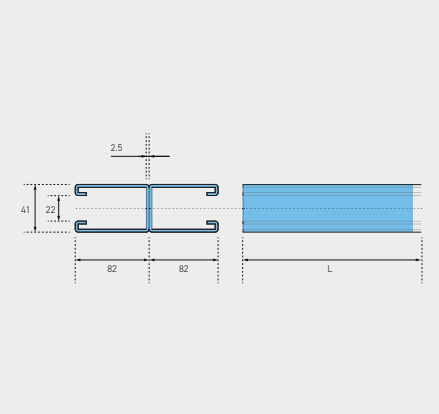

	Article number	L mm	AxB mm	C mm	S mm	H mm		kg/ unit
●	ES5001HDG	6	82x41	22	2,5	50	1	

● In stock ● Limited stock ● On request

ES5001T | Eurostrut | Slotted Strut Channel 2x(82x41mm)

SPECIFICATIONS

- For heavy duty applications.
- Spot welded seam.
- Available in:
  - Hot dip galvanized (HDG) carbon steel, in accordance with NEN-EN-ISO 1461.
    - Thickness layer 45 to 55 µm.
  - Pre galvanized (PG).
- Length 6 meter.
- Slots 12,8x25mm, every 50mm.

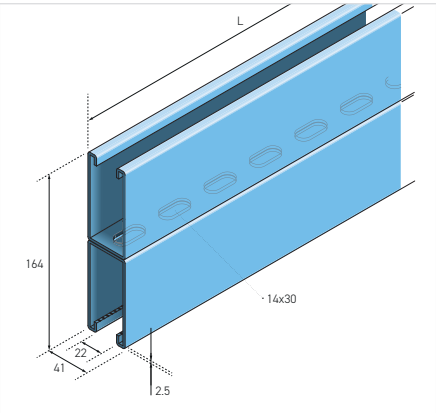

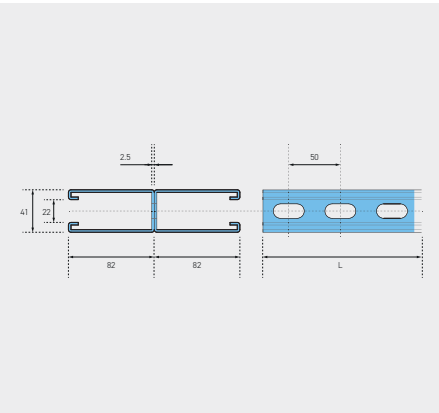

	Article number	L mm	AxB mm	C mm	S mm	DxE mm	H mm		kg/ unit
●	ES5001THDG	6	82x41	22	2,5	14x30	50	1	
●	ES5001TPG	6	82x41	22	2,5	14x30	50	1	

● In stock ● Limited stock ● On request

ES5501T | Eurostrut | Slotted Strut Channel 2x(62x41mm)

SPECIFICATIONS

- For heavy duty applications.
- Spot welded seam.
- Available in:
  - Hot dip galvanized (HDG) carbon steel, in accordance with NEN-EN-ISO 1461.
    - Thickness layer 45 to 55 µm.
  - Pre galvanized (PG).
- Length 6 meter.
- Slots 14x27mm, every 50mm.

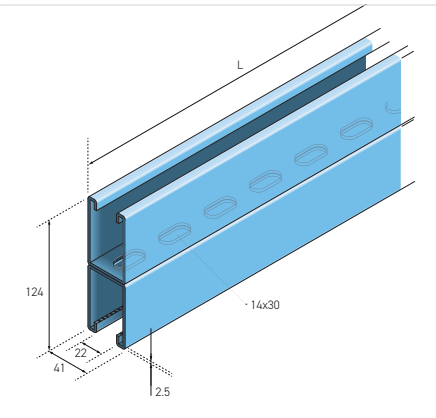

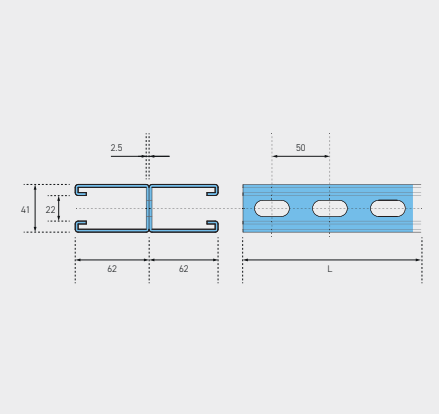

	Article number	L mm	AxB mm	C mm	S mm	DxE mm	H mm		kg/ unit
●	ES5501THDG	6	62x41	22	2,5	14x30	50	1	44,80
●	ES5501TPG	6	62x41	22	2,5	14x30	50	1	44,00

● In stock ● Limited stock ● On request

LOAD DATA

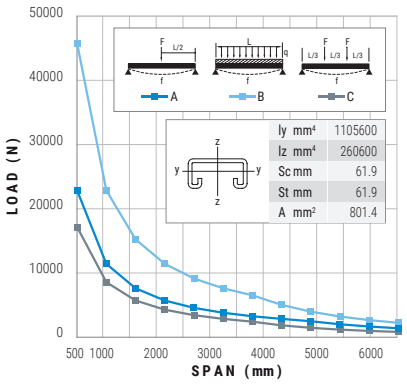

σ_{zul}=160 N/mm
f_{zul}=l/200

ES1001-B | Eurostrut | Strut Channel 2x(41x41mm) side/side

SPECIFICATIONS

- For medium to heavy duty applications.
- Spot welded seam.
- Available in:
  - Hot dip galvanized (HDG) carbon steel, in accordance with NEN-EN-ISO 1461.
    - Thickness layer 45 to 55 µm.
- Length 6 meter.

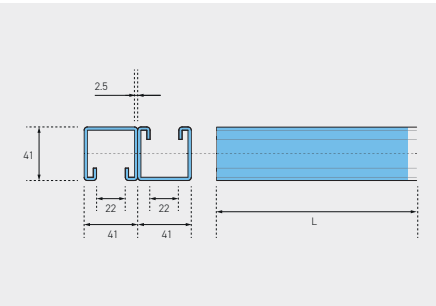

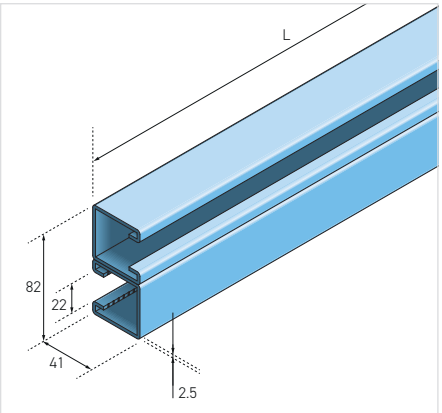

	Article number	L mm	AxB mm	C mm	S mm		kg/ unit
●	ES1001-BHDG	6	41x41	22	2,5	1	31,20

● In stock ● Limited stock ● On request

ES1001-C | Eurostrut | Strut Channel 2x(41x41mm) back/side

SPECIFICATIONS

- For medium to heavy duty applications.
- Spot welded seam.
- Available in:
  - Hot dip galvanized (HDG) carbon steel, in accordance with NEN-EN-ISO 1461.
    - Thickness layer 45 to 55 µm.
- Length 6 meter.

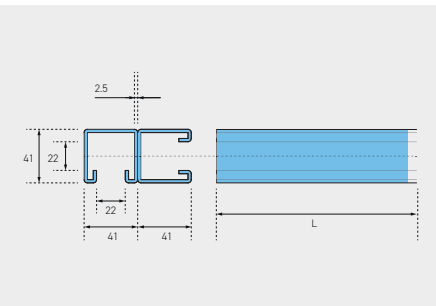

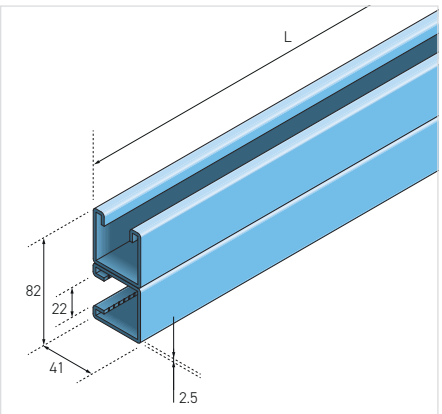

	Article number	L mm	AxB mm	C mm	S mm		kg/ unit
●	ES1001-CHDG	6	41x41	22	2,5	1	31,20

● In stock ● Limited stock ● On request

| + 31 10 522 33 51 | info@eurostrut.com | eurostrut.com

ES1001CSW | Eurostrut | Plain Strut Channel 2x(41x41mm)

SPECIFICATIONS

- For heavy duty applications.
- Continue welded seam.
- Available in:
  - Hot dip galvanized (HDG) carbon steel, in accordance with NEN-EN-ISO 1461.
    - Thickness layer 45 to 55 µm.
  - Pre galvanized (PG).
  - Stainless steel A4 / 316L (SS).
- Length 6 meter.

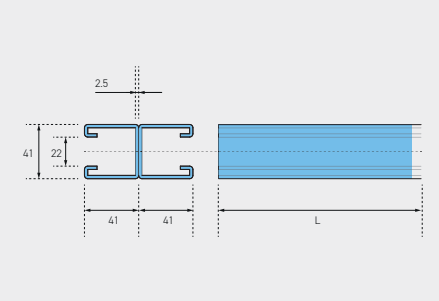

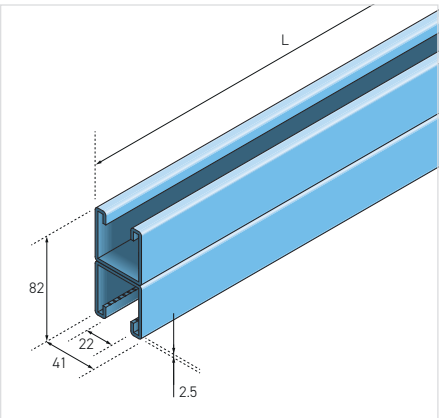

	Article number	L mm	AxB mm	C mm	S mm	H mm		kg/ unit
●	ES1001CSWHDG	6	41x41	22	2,5	50	1	

● In stock ● Limited stock ● On request

ES1001TCSW | Eurostrut | Slotted Strut Channel 2x(41x41mm)

SPECIFICATIONS

- For heavy duty applications.
- Continue welded seam.
- Available in:
  - Hot dip galvanized (HDG) carbon steel, in accordance with NEN-EN-ISO 1461.
    - Thickness layer 45 to 55 µm.
- Length 6 meter.
- Slots 12,8x25mm, every 50mm.

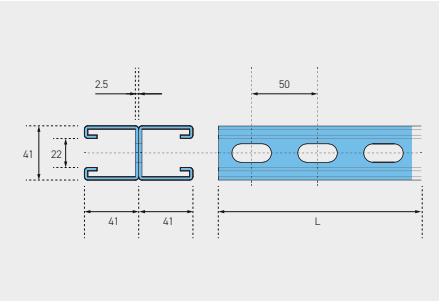

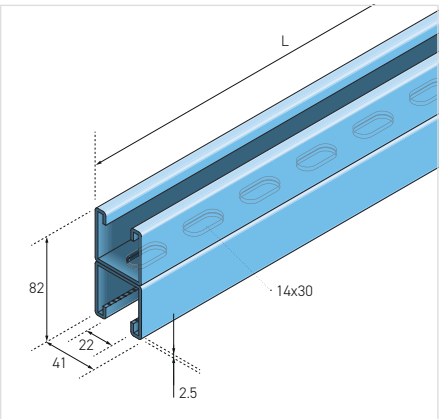

	Article number	L mm	AxB mm	C mm	S mm	DxE mm	H mm		kg/ unit
●	ES1001TCSWHDG	6	41x41	22	2,5	14x30	50	1	

● In stock ● Limited stock ● On request

ES1003-1 | Eurostrut | Strut Channel 41x41mm with flat plate welded on back

SPECIFICATIONS

- For medium duty applications.
- Spot welded seam.
- Available in:
  - Hot dip galvanized (HDG) carbon steel, in accordance with NEN-EN-ISO 1461.
    - Thickness layer 45 to 55 µm.
- Length 3 meter.

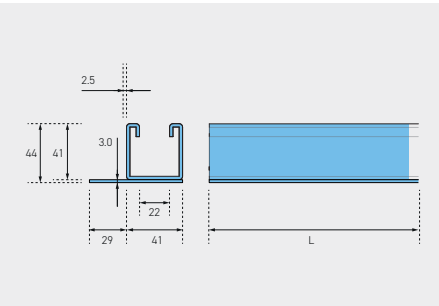

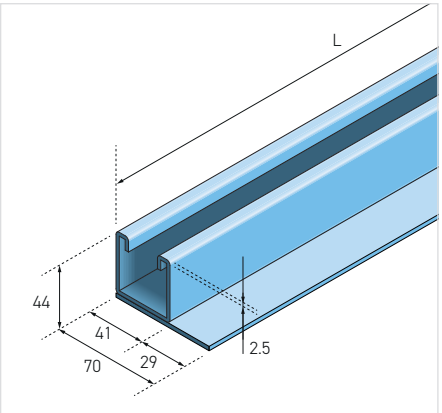

	Article number	L mm	AxB mm	C mm	S mm	D mm	E mm		kg/ unit
●	ES1003-1HDG	3	44x41	22	2,5	30	70	1	13,50

● In stock ● Limited stock ● On request

Stay up to date!

Follow **@eurostrut** on social media and sign in to our newsletter:
www.eurostrut.com/en/newsletter



ES3006/3007/3008/3013/3016 | Eurostrut | Strut Channel Nut Plain

SPECIFICATIONS

- Available in:
  - Hot dip galvanized ISO (HDG).
  - Electro zinc galvanized (EG).
  - Stainless steel A4 / 316L (SS).
- Size M6 to M16.
- Serrated nuts to suit strut channels.
- Fits on to 41mm strut channels.

	Article number	M	H mm	Nm		kg/ unit
●	ES3006HDG	M6	6	3,5	100	0,03
●	ES3007HDG	M8	6	8,4	100	0,03
●	ES3008HDG	M10	8	17	100	0,04
●	ES3013HDG	M12	9	29	100	0,04
●	ES3016HDG	M16	10	71	100	0,05
●	ES3006EG	M6	6	3,5	100	0,03
●	ES3007EG	M8	6	8,4	100	0,03
●	ES3008EG	M10	8	17	100	0,04
●	ES3013EG	M12	9	29	100	0,04
●	ES3016EG	M16	10	71	100	0,05
●	ES3006SS	M6	6	3,5	100	0,03
●	ES3007SS	M8	6	8,4	100	0,03
●	ES3008SS	M10	8	17	100	0,04
●	ES3013SS	M12	9	29	100	0,03

● In stock ● Limited stock ● On request



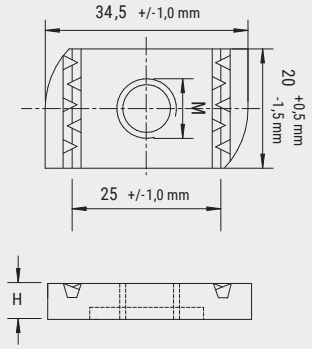

ES4006/4007/4008/4010 | Eurostrut | Strut Channel Nut Plain with Short Spring

SPECIFICATIONS

- Available in:
  - Hot dip galvanized ISO (HDG).
  - Electro zinc galvanized (EG).
  - Stainless steel A4 / 316L (SS).
- Size M6 to M12.
- Serrated nuts to suit strut channels.
- Fits on to 41mm strut channels.

	Article number	M	H mm	Nm		kg/ unit
●	ES4006 HDG	M6	6	3,5	100	0,03
●	ES4007 HDG	M8	6	8,4	100	0,03
●	ES4008 HDG	M10	8	17	100	0,04
●	ES4010 HDG	M12	8	29	100	0,04
●	ES4006 EG	M6	6	3,5	100	0,03
●	ES4007 EG	M8	6	8,4	100	0,03
●	ES4008 EG	M10	8	17	100	0,04
●	ES4010 EG	M12	8	29	100	0,04
●	ES4006 SS	M6	6	3,5	100	0,03
●	ES4007 SS	M8	6	8,4	100	0,03
●	ES4008 SS	M10	8	17	100	0,04
●	ES4010 SS	M12	8	29	100	0,04

● In stock ● Limited stock ● On request



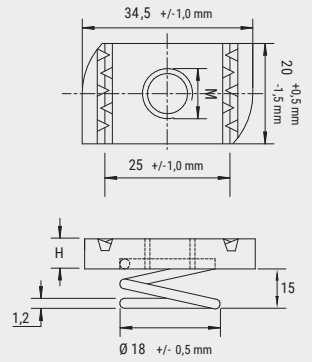

ES1006/1007/1008/1013 | Eurostrut | Strut Channel Nut Plain with Long Spring

SPECIFICATIONS

- Available in:
  - Hot dip galvanized ISO (HDG).
  - Electro zinc galvanized (EG).
  - Stainless steel A4 / 316L (SS).
- Size M6 to M12.
- Serrated nuts to suit strut channels.
- Fits on to 41mm strut channels.

	Article number	M	H mm	Nm		kg/ unit
●	ES1006 HDG	M6	6	3,5	100	0,03
●	ES1007 HDG	M8	6	8,4	100	0,03
●	ES1008 HDG	M10	8	17	100	0,04
●	ES1013 HDG	M12	8	29	100	0,04
●	ES1006 EG	M6	6	3,5	100	0,03
●	ES1007 EG	M8	6	8,4	100	0,03
●	ES1008 EG	M10	8	17	100	0,04
●	ES1013 EG	M12	8	29	100	0,04
●	ES1006 SS	M6	6	3,5	100	0,03
●	ES1007 SS	M8	6	8,4	100	0,03
●	ES1008 SS	M10	8	17	100	0,04
●	ES1013 SS	M12	8	29	100	0,04

● In stock ● Limited stock ● On request



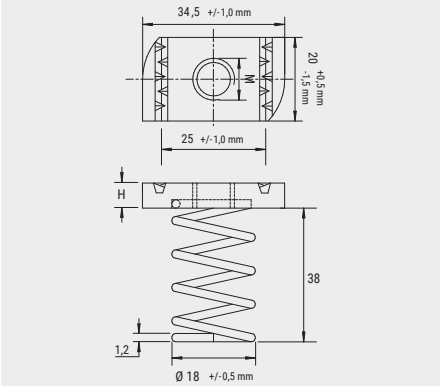

ES5006/5007/5008/5013 | Eurostrut | Strut Channel Nut Plain with Plastic Fixation

SPECIFICATIONS

- Available in:
  - Hot dip galvanized ISO (HDG).
  - Electro zinc galvanized (EG).
  - Stainless steel A4 / 316L (SS).
- Size M6 to M12.
- Serrated nuts to suit strut channels.
- Fits on to 41mm strut channels.
- Simple and fast mounting with one hand.
- Holds after rotation in the rail.
- Ideal for vertically-installed channel.
- Remains easy to move after mounting.
- No jamming of the spring in perforated rails.

	Article number	M	H mm	Nm		kg/ unit
●	ES5006 HDG	M6	6	3,5	100	0,03
●	ES5007 HDG	M8	6	8,4	100	0,03
●	ES5008 HDG	M10	8	17	100	0,04
●	ES5013 HDG	M12	9	29	100	0,04
●	ES5006 EG	M6	6	3,5	100	0,03
●	ES5007 EG	M8	6	8,4	100	0,03
●	ES5008 EG	M10	8	17	100	0,04
●	ES5013 EG	M12	9	29	100	0,04
●	ES5006 SS	M6	6	3,5	100	0,03
●	ES5007 SS	M8	6	8,4	100	0,03
●	ES5008 SS	M10	8	17	100	0,04
●	ES5013 SS	M12	9	29	100	0,04

● In stock ● Limited stock ● On request



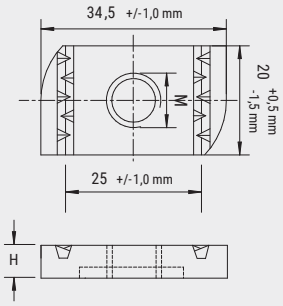

Application

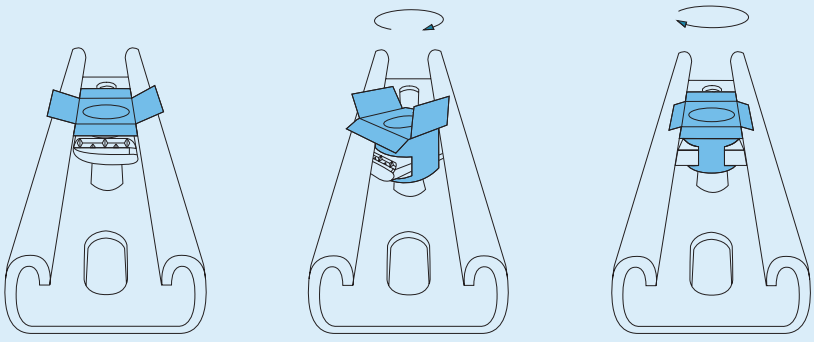

ESSN | Eurostrut | Strut Nut

SPECIFICATIONS

- Available in:
  - Electro zinc plated (EG).
  - Stainless steel A4 / 316L (SS).
- Pre mounted with nut and large washer.
- With stud M8, M10 and M12.
- Channel nuts are serrated.
- Fits on to all strut channels.



	Article number	MxL mm		kg/ unit
●	ESSN08x30EG	M8x30	50	0,08
●	ESSN08x40EG	M8x40	50	0,11
●	ESSN08x50EG	M8x50	50	0,14
●	ESSN08x60EG	M8x60	50	0,16
●	ESSN10X30EG	M10x30	50	-
●	ESSN10x40EG	M10x40	50	0,12
●	ESSN10x50EG	M10x50	50	0,15
●	ESSN10x60EG	M10x60	50	0,18
●	ESSN10x80EG	M10x80	50	-
●	ESSN10x90EG	M10x90	50	0,27
●	ESSN10x100EG	M10x100	50	-
●	ESSN12X30EG	M12x30	50	-
●	ESSN12x40EG	M12x40	50	0,13
●	ESSN12x60EG	M12x60	50	-
●	ESSN08x40SS	M8x40	50	0,11
●	ESSN10x40SS	M10x40	50	0,12

● In stock ● Limited stock ● On request

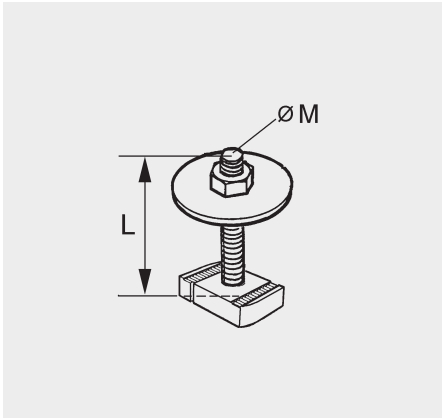

ESCS17/19 | Eurostrut | Channel Socket Drive for Strut Channel

SPECIFICATIONS

- For M10 and M12 bolts and nuts.
- Fits on all Strut channels H = 21mm and 41mm.



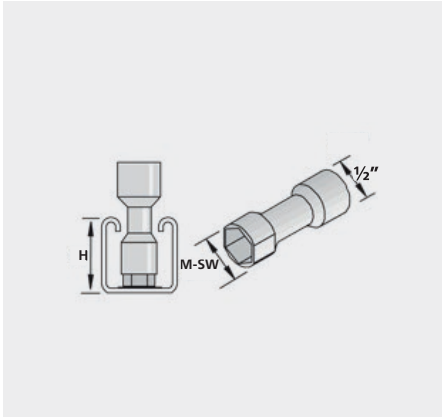

	Article number	H mm	M	SW mm
●	ESCS17AF	41	10	17
●	ESCS17AF/21	21	10	17
●	ESCS19AF	41	12	19

● In stock ● Limited stock ● On request

PTFE | Eurostrut | Teflon Strip

SPECIFICATIONS

- PTFE or Teflon is a plastic material with exceptional chemical resistance and extremely high temperature resistance (up to 260°C).
- In addition, Teflon has a very low coefficient of friction, is non-combustible and anti-adhesive.

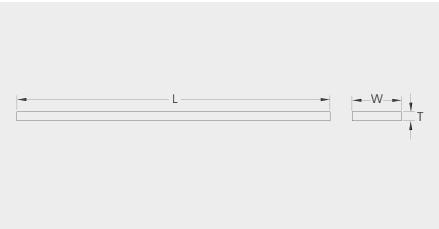

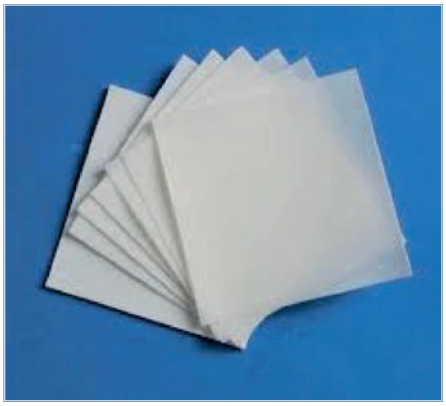

	Article number	Thickness T mm	Lenght L mm	Width W mm	Weight kg/unit	Color
●	PTFE1.0W	1,0	1200	40	0,14	White
●	PTFE2.0W	2,0	1200	40	0,27	White
●	PTFE4.0W	4,0	1200	40	0,54	White

● In stock ● Limited stock ● On request

ES4141 & ES2141 | Eurostrut | Channel End Cap for Strut Channel

SPECIFICATIONS

- Material PE (Polyethylene).
- In colours white (PW) and black (PB).



Application

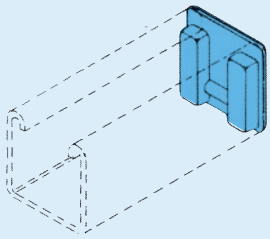

	Article number	HxB mm		kg/ 100
●	ES4141PW	41x41	100	1,00
●	ES4141PB	41x41	100	0,50
●	ES2141PW	21x41	100	1,00
●	ES2141PB	21x41	100	0,50

● In stock ● Limited stock ● On request

ES1184 | Eurostrut | Closure Strap for Strut Channel

SPECIFICATIONS

- Length 3 meter.
- Polyvinychloride in colors white (PW) and black (PB), or pre galvanized (F).



Application

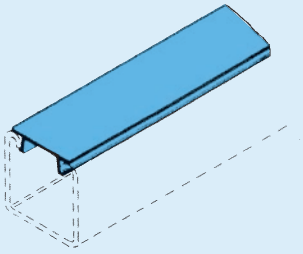

	Article number	Material		kg/ unit
●	ES1184PW	PVC White	1	0,23
●	ES1184PB	PVC Black	1	0,23
●	ES1184F	Metal	1	1,00

● In stock ● Limited stock ● On request

ESZS | W+S | Aerosol Can Zinc Spray

SPECIFICATIONS

- Zinc spray 80/81.
- Zinc spray with a particularly high zinc content (more than 90% in dry film) for exceptionally active and durable protection of steel and metal corrosion.
- Optically adapted to hot-dip galvanizing.
- For many industrial maintenance and repair.
- Beautify and protect at the same time.
- This zinc spray combines protection by pure metal pigments with the shiny appearance of a bare metal surface.
- To restore a damaged galvanized surfaces.

	Article number	Content ml		kg/ unit
●	ESZS400	400	1	0,55

● In stock ● Limited stock ● On request



ESZP | W+S | Tin Zinc Paint (Zinc Compound)

SPECIFICATIONS

- Zinc paint (zinc compound) 80/81.
- Shines as galvanized material.
- It is an anti-rust coating on the metal.
- Repair paint for galvanized parts.
- With a zinc content of more than 90% in the pigment.
- For many industrial maintenance and repair.
- To restore a damaged galvanized surfaces.

	Article number	Content ml		kg/ unit
●	ESZP250	250	1	0,60
●	ESZP500	500	1	1,15
●	ESZP1000	1000	1	2,15

● In stock ● Limited stock ● On request



335980 | Eurostrut | Rubber Strap for Strut Channel

SPECIFICATIONS

- EPDM insulation profile to prevent contact between support and ventilation duct.
- Suitable for strut.
- Can be used with threaded rods up to M10.
- Material: EPDM-SBR rubber.
- Temperature: -50 to 110 °C.



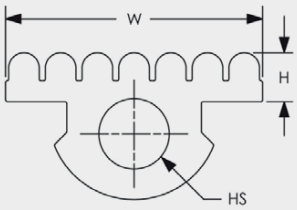

	Article number	L m	H mm	W mm	HS mm
●	335980	20	8	42	11

● In stock ● Limited stock ● On request

ES1377 | Eurostrut | External Splice Plate for Strut Channels

SPECIFICATIONS

- For bolts M12.
- Available in:
  - Hot dip galvanized (HDG).
  - Stainless steel A4 / 316L (SS).
- To create metal frames with strut channels.



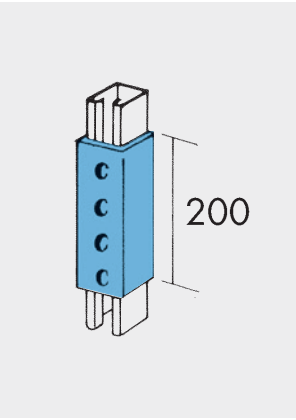

	Article number	HxB mm		kg/ unit
●	ES1377HDG	41x41	10	1,11
●	ES1377SS	41x41	10	1,11

● In stock ● Limited stock ● On request

SCBF | Eurostrut | Banded Fitting One Hole for Strut Channel

SPECIFICATIONS

- For bolts M8, M10 and M12.
- Available in:
  - Hot dip galvanized (HDG).
  - Stainless steel A4 / 316L (SS).
- Fits on all strut channels.



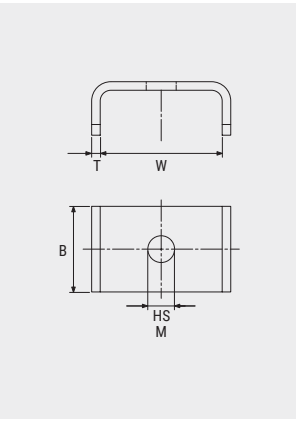

	Article number	HS mm	M	W mm	T mm	B mm		kg/ unit
●	SCBF8HDG	10	M8	42	3	30	100	0,05
●	SCBF10HDG	12	M10	42	3	30	100	0,05
●	SCBF12HDG	14	M12	42	3	30	100	0,05
●	SCBF8SS	10	M8	42	3	30	100	0,05
●	SCBF10SS	12	M10	42	3	30	100	0,05
●	SCBF12SS	14	M12	42	3	30	100	0,05

● In stock ● Limited stock ● On request

ES1062/1062A/1063/1064 | Eurostrut | Flat Strut Bracket 1 hole square washer

SPECIFICATIONS

- Thickness 5mm.
- Available in:
  - Hot dip galvanized (HDG).
  - Stainless steel A4 / 316L (SS).
- To create metal frames with strut channels.

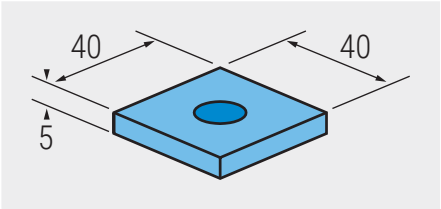

	Article number	M		kg/ unit
●	ES1062HDG	6	100	0,07
●	ES1062SS	6	100	0,07
●	ES1062AHDG	8	100	0,07
●	ES1062ASS	8	100	0,07
●	ES1063HDG	10	100	0,07
●	ES1063SS	10	100	0,07
●	ES1064HDG	12	100	0,07
●	ES1064SS	12	100	0,07

● In stock ● Limited stock ● On request

Application

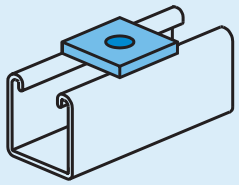

ES1065 | Eurostrut | Flat Strut bracket Straight 2 Holes

SPECIFICATIONS

- Thickness 5mm.
- Available in:
  - Hot dip galvanized (HDG).
  - Stainless steel A4 / 316L (SS).
- To create metal frames with strut channels.
- For bolts M12.

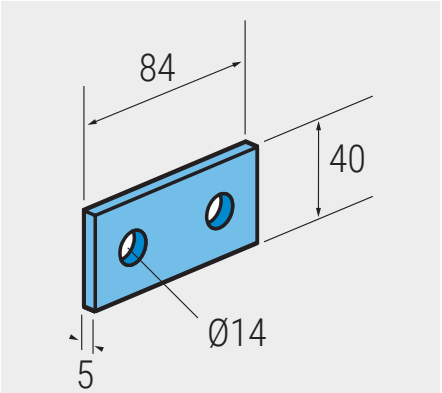

	Article number		kg/ unit
●	ES1065HDG	50	0,12
●	ES1065SS	50	0,12

● In stock ● Limited stock ● On request

Application

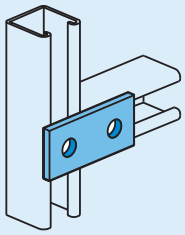

ES1066 | Eurostrut | Flat Strut Bracket Straight 3 Holes

SPECIFICATIONS

- Thickness 5mm.
- Available in:
  - Hot dip galvanized (HDG).
  - Stainless steel A4 / 316L (SS).
- To create metal frames with strut channels.
- For bolts M12.

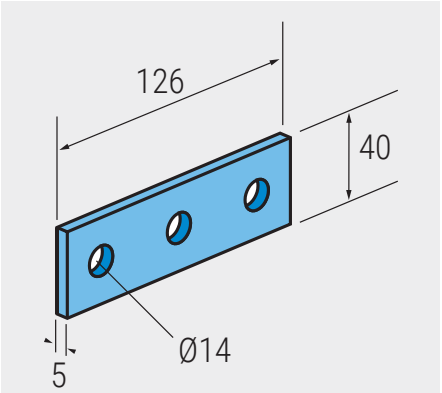

	Article number		kg/ unit
●	ES1066HDG	25	0,24
●	ES1066SS	25	0,24

● In stock ● Limited stock ● On request

Application

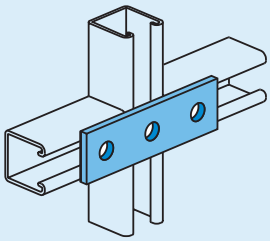

ES1067 | Eurostrut | Flat Strut Bracket Straight 4 Holes

SPECIFICATIONS

- Thickness 5mm.
- Available in:
  - Hot dip galvanized (HDG).
  - Stainless steel A4 / 316L (SS).
- To create metal frames with strut channels.
- For bolts M12.

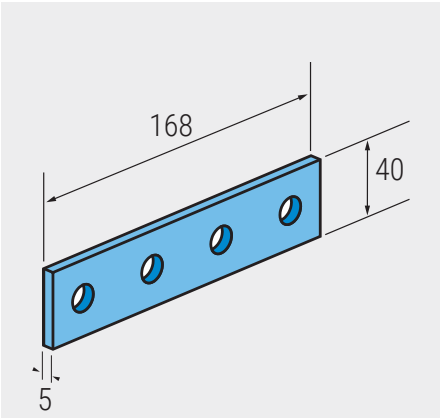

	Article number		kg/ unit
●	ES1067HDG	25	0,28
●	ES1067SS	25	0,28

● In stock ● Limited stock ● On request

Application

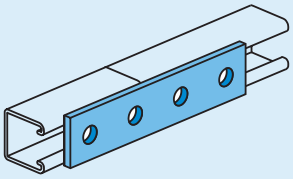

ES1941 | Eurostrut | Flat Strut Bracket Straight 5 Holes

SPECIFICATIONS

- Thickness 5mm.
- Available in:
  - Hot dip galvanized (HDG).
  - Stainless steel A4 / 316L (SS).
- To create metal frames with strut channels.
- For bolts M12.

	Article number		kg/ unit
●	ES1941HDG	25	0,36
●	ES1941SS	25	0,36

● In stock ● Limited stock ● On request

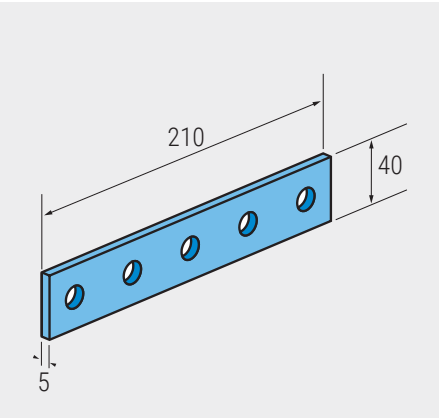

Application

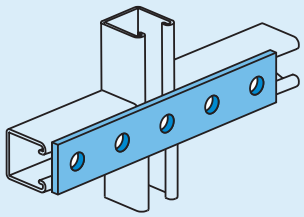

ES2322 | Eurostrut | Flat Strut Bracket Straight with 1 Rounded End 3 Holes

SPECIFICATIONS

- Thickness 5mm.
- Available in:
  - Hot dip galvanized (HDG).
- To create metal frames with strut channels.
- For bolts M12.

	Article number		kg/ unit
●	ES2322HDG	25	0,28

● In stock ● Limited stock ● On request

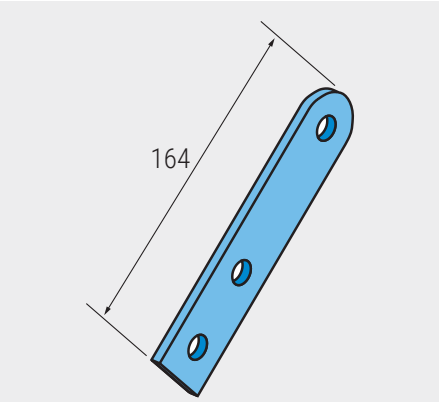

Application

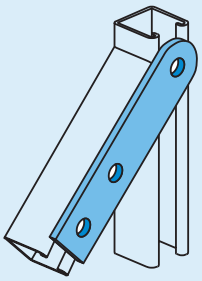

ES1036 | Eurostrut | Flat Angle Strut Bracket 3 Holes

SPECIFICATIONS

- Thickness 5mm.
- Available in:
  - Hot dip galvanized (HDG).
  - Stainless steel A4 / 316L (SS).
- To create metal frames with strut channels.
- For bolts M12.

	Article number		kg/ unit
●	ES1036HDG	25	0,21
●	ES1036SS	25	0,21

● In stock ● Limited stock ● On request

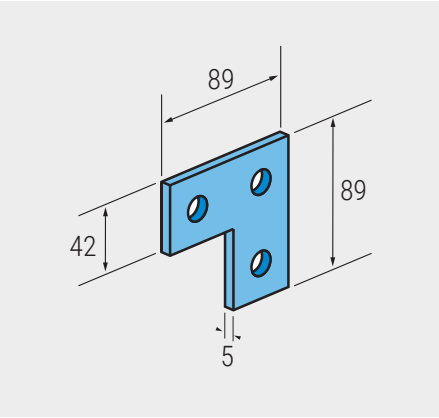

Application

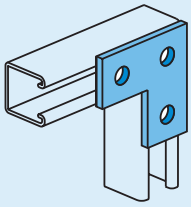

ES1031 | Eurostrut | Flat Tee Strut Bracket 4 Holes

SPECIFICATIONS

- Thickness 5mm.
- Available in:
  - Hot dip galvanized (HDG).
  - Stainless steel A4 / 316L (SS).
- To create metal frames with strut channels.
- For bolts M12.

	Article number		kg/ unit
●	ES1031HDG	25	0,30
●	ES1031SS	25	0,30

● In stock ● Limited stock ● On request

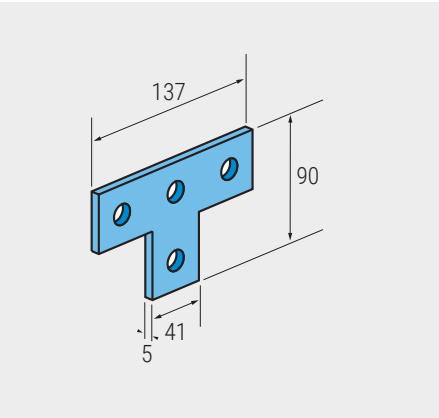

Application

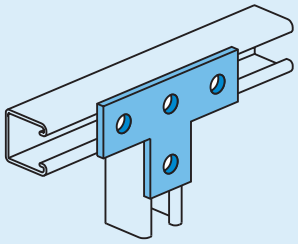

| + 31 10 522 33 51 | info@eurostrut.com | **eurostrut.com**

ES1358 | Eurostrut | Flat Wide Strut Tee Bracket 4 Holes

SPECIFICATIONS

- Thickness 5mm.
- Available in:
  - Hot dip galvanized (HDG).
  - Stainless steel A4 / 316L (SS).
- To create metal frames with strut channels.
- For bolts M12.

	Article number		kg/ unit
●	ES1358HDG	10	0,42
●	ES1358SS	10	0,42

● In stock ● Limited stock ● On request

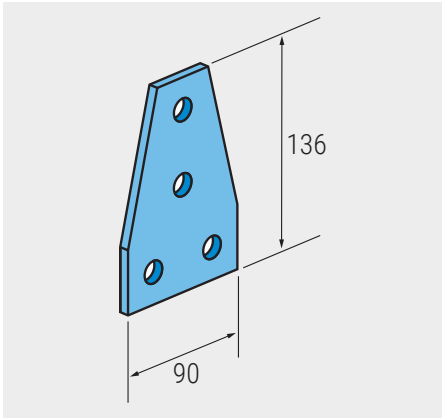

Application

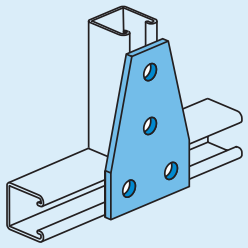

ES1028 | Eurostrut | Flat Cross Strut Bracket 5 Holes

SPECIFICATIONS

- Thickness 5mm.
- Available in:
  - Hot dip galvanized (HDG).
  - Stainless steel A4 / 316L (SS).
- To create metal frames with strut channels.
- For bolts M12.

	Article number		kg/ unit
●	ES1028HDG	25	0,42
●	ES1028SS	25	0,42

● In stock ● Limited stock ● On request

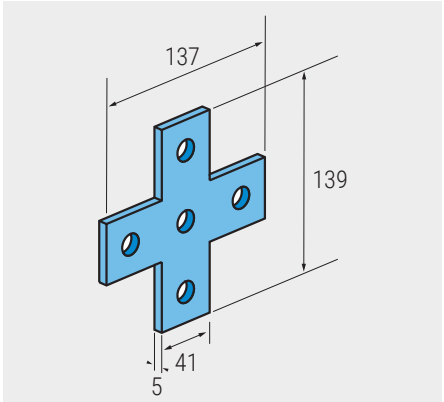

Application

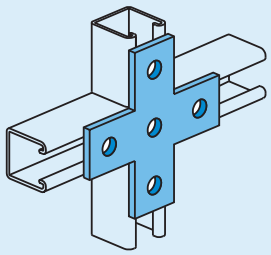

ES1580 | Eurostrut | Flat Cross Strut Bracket 4 Holes

SPECIFICATIONS

- Thickness 5mm.
- Available in:
  - Hot dip galvanized (HDG).
  - Stainless steel A4 / 316L (SS).
- To create metal frames with strut channels.
- For bolts M12.

	Article number		kg/ unit
●	ES1580HDG	10	0,80
●	ES1580SS	10	0,80

● In stock ● Limited stock ● On request

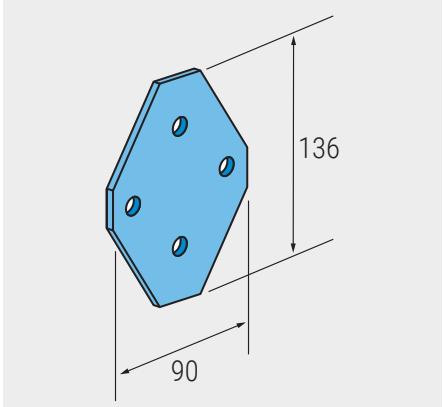

Application

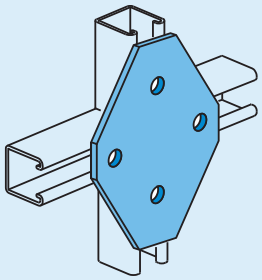

ES1962 | Eurostrut | Flat Tri-Direction Strut Bracket 4 Holes

SPECIFICATIONS

- Thickness 5mm.
- Available in:
  - Hot dip galvanized (HDG).
  - Stainless steel A4 / 316L (SS).
- To create metal frames with strut channels.
- For bolts M12.

	Article number		kg/ unit
●	ES1962HDG	10	0,40
●	ES1962SS	10	0,40

● In stock ● Limited stock ● On request

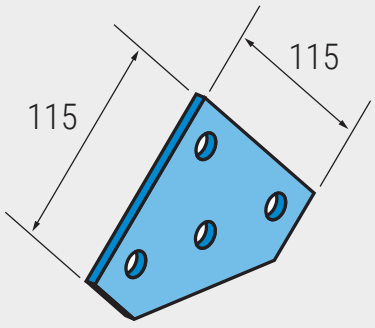

Application

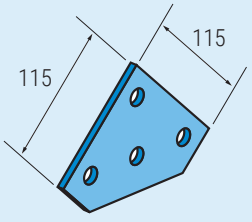

ES1026 | Eurostrut | 90° Angle Strut Bracket 2 Holes

SPECIFICATIONS

- Thickness 5mm.
- Available in:
  - Hot dip galvanized (HDG).
  - Stainless steel A4 / 316L (SS).
- To create metal frames with strut channels.
- For bolts M12.

	Article number		kg/ unit
●	ES1026HDG	50	0,13
●	ES1026SS	50	0,13

● In stock ● Limited stock ● On request

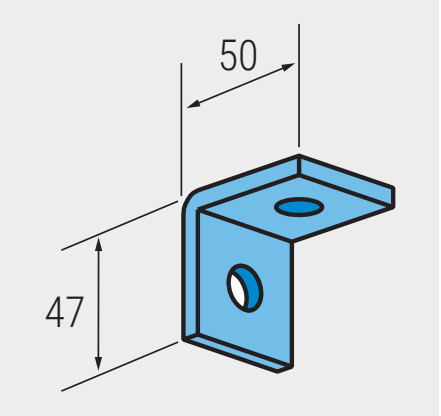

Application

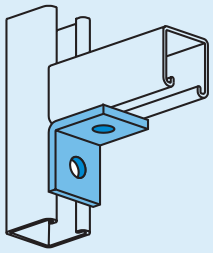

ES1068 | Eurostrut | 90° Angle Strut Bracket 2 Holes

SPECIFICATIONS

- Thickness 5mm.
- Available in:
  - Hot dip galvanized (HDG).
  - Stainless steel A4 / 316L (SS).
- To create metal frames with strut channels.
- For bolts M12.

	Article number		kg/ unit
●	ES1068HDG	50	0,15
●	ES1068SS	50	0,15

● In stock ● Limited stock ● On request

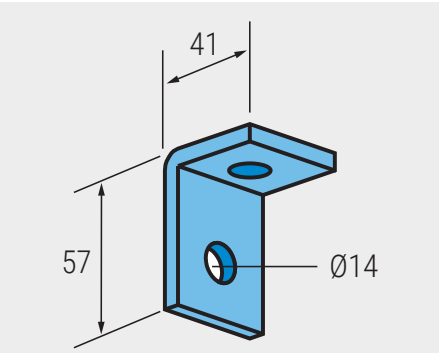

Application

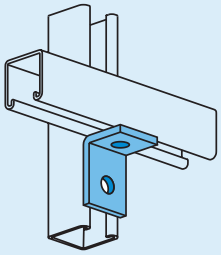

ES1326 | Eurostrut | 90° Angle Strut Bracket 3 Holes

SPECIFICATIONS

- Thickness 5mm.
- Available in:
  - Hot dip galvanized (HDG).
  - Stainless steel A4 / 316L (SS).
- To create metal frames with strut channels.
- For bolts M12.

	Article number		kg/ unit
●	ES1326HDG	25	0,24
●	ES1326SS	25	0,24

● In stock ● Limited stock ● On request

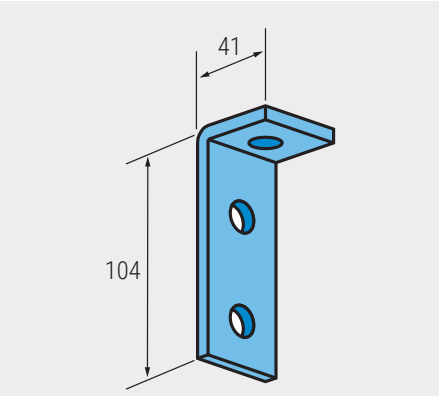

Application

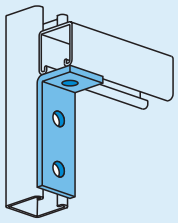

ES1346 | Eurostrut | 90° Angle Strut Bracket 3 Holes

SPECIFICATIONS

- Thickness 5mm.
- Available in:
  - Hot dip galvanized (HDG).
  - Stainless steel A4 / 316L (SS).
- To create metal frames with strut channels.
- For bolts M12.

	Article number		kg/ unit
●	ES1346HDG	25	0,24
●	ES1346SS	25	0,24

● In stock ● Limited stock ● On request

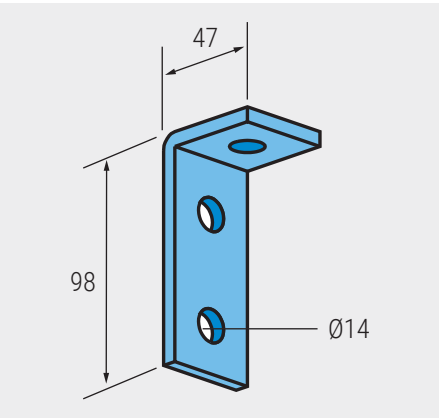

Application

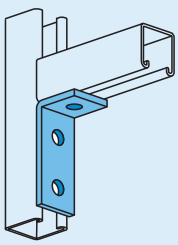

| + 31 10 522 33 51 | info@eurostrut.com | eurostrut.com

ES1458 | Eurostrut | 90° Angle Strut Bracket 3 Holes

SPECIFICATIONS

- Thickness 5mm.
- Available in:
  - Hot dip galvanized (HDG).
  - Stainless steel A4 / 316L (SS).
- To create metal frames with strut channels.
- For bolts M12.

	Article number		kg/ unit
●	ES1458HDG	25	0,24
●	ES1458SS	25	0,24

● In stock ● Limited stock ● On request

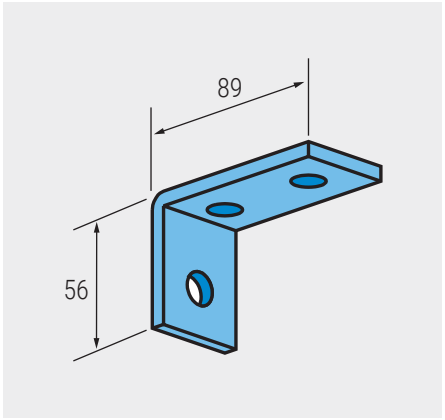

Application

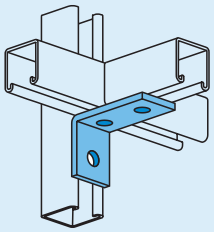

ES1325 | Eurostrut | 90° Angle Strut Bracket 4 Holes

SPECIFICATIONS

- Thickness 5mm.
- Available in:
  - Hot dip galvanized (HDG).
  - Stainless steel A4 / 316L (SS).
- To create metal frames with strut channels.
- For bolts M12.

	Article number		kg/ unit
●	ES1325HDG	25	0,29
●	ES1325SS	25	0,29

● In stock ● Limited stock ● On request

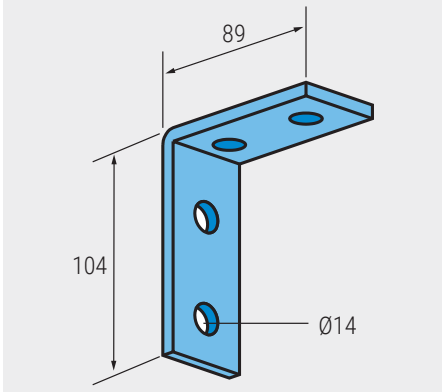

Application

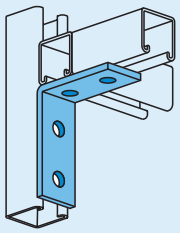

ES1278 | Eurostrut | 90° Angle Strut Bracket 4 Holes

SPECIFICATIONS

- Thickness 5mm.
- Available in:
  - Hot dip galvanized (HDG).
  - Stainless steel A4 / 316L (SS).
- To create metal frames with strut channels.
- For bolts M12.

	Article number		kg/ unit
●	ES1278HDG	25	0,29
●	ES1278SS	25	0,29

● In stock ● Limited stock ● On request

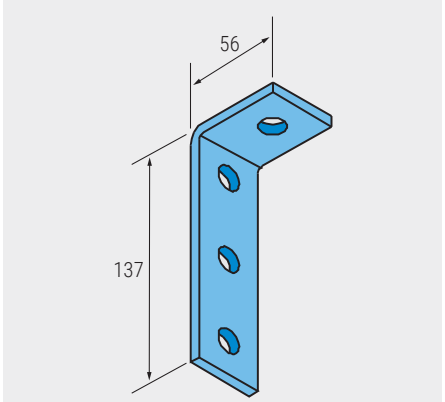

Application

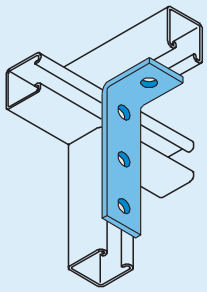

ES2484 | Eurostrut | 90° Angle Strut Bracket 4 Holes

SPECIFICATIONS

- Thickness 5mm.
- Available in:
  - Hot dip galvanized (HDG).
  - Stainless steel A4 / 316L (SS).
- To create metal frames with strut channels.
- For bolts M12.

	Article number		kg/ unit
●	ES2484HDG	25	0,29
●	ES2484SS	25	0,29

● In stock ● Limited stock ● On request

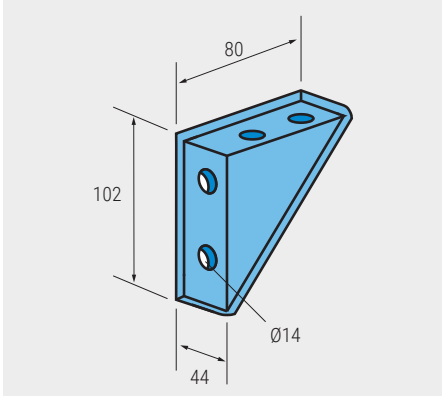

Application

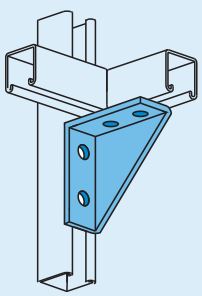

ES1359 | Eurostrut | 90° Wide Tee Angle Strut Bracket 4 Holes

SPECIFICATIONS

- Thickness 5mm.
- Available in:
  - Hot dip galvanized (HDG).
  - Stainless steel A4 / 316L (SS).
- To create metal frames with strut channels.
- For bolts M12.

	Article number		kg/ unit
●	ES1359HDG	10	0,45
●	ES1359SS	10	0,45

● In stock ● Limited stock ● On request

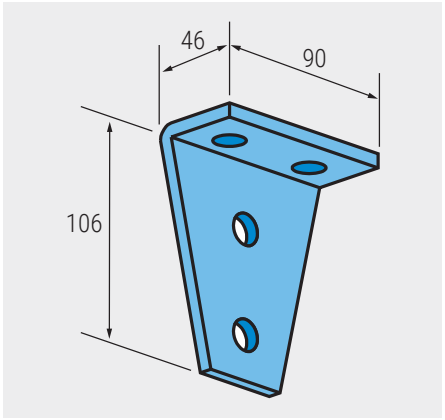

Application

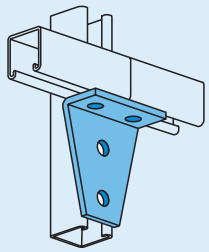

ES1357 | Eurostrut | 90° Wide Tee Angle Strut Bracket 3 Holes

SPECIFICATIONS

- Thickness 5mm.
- Available in:
  - Hot dip galvanized (HDG).
  - Stainless steel A4 / 316L (SS).
- To create metal frames with strut channels.
- For bolts M12.

	Article number		kg/ unit
●	ES1357HDG	10	0,30
●	ES1357SS	10	0,30

● In stock ● Limited stock ● On request

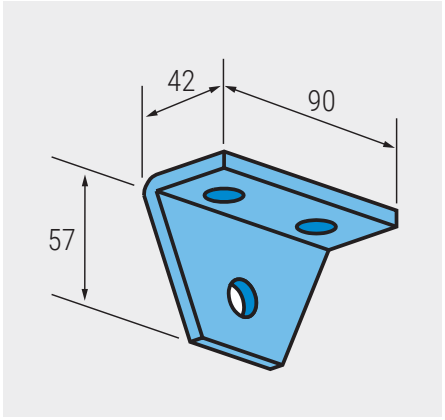

Application

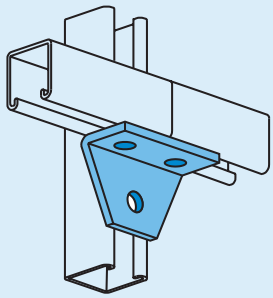

ES1727 | Eurostrut | 90° Wide Tee Angle Strut Bracket 5 Holes

SPECIFICATIONS

- Thickness 5mm.
- Available in:
  - Hot dip galvanized (HDG).
  - Stainless steel A4 / 316L (SS).
- To create metal frames with strut channels.
- For bolts M12.

	Article number		kg/ unit
●	ES1727HDG	10	0,45
●	ES1727SS	10	0,45

● In stock ● Limited stock ● On request

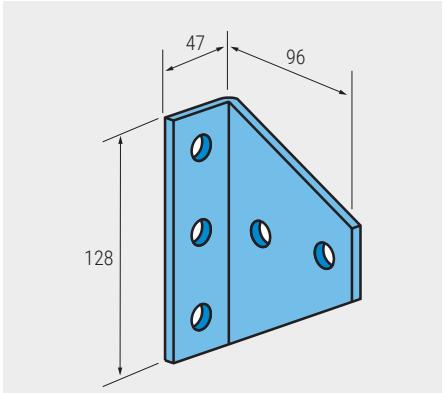

Application

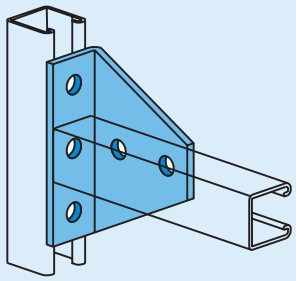

ES1186 | Eurostrut | 45° Angle Strut Bracket 2 Holes

SPECIFICATIONS

- Thickness 5mm.
- Available in:
  - Hot dip galvanized (HDG).
  - Stainless steel A4 / 316L (SS).
- To create metal frames with strut channels.
- For bolts M12.

	Article number	A°		kg/ unit
●	ES1186HDG	45	25	0,32
●	ES1186SS	45	25	0,32

● In stock ● Limited stock ● On request

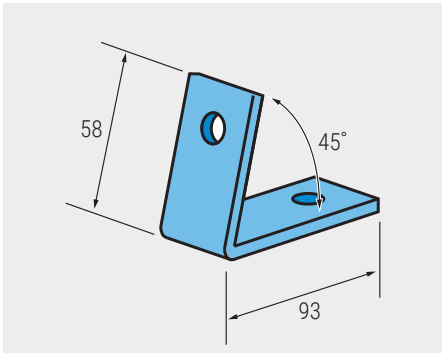

Application

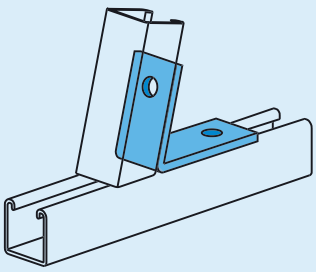

| + 31 10 522 33 51 | info@eurostrut.com | eurostrut.com

ES2108 | Eurostrut | 60° Angle Strut Bracket 2 Holes

SPECIFICATIONS

- Thickness 5mm.
- Available in:
  - Hot dip galvanized (HDG).
  - Stainless steel A4 / 316L (SS).
- To create metal frames with strut channels.
- For bolts M12.

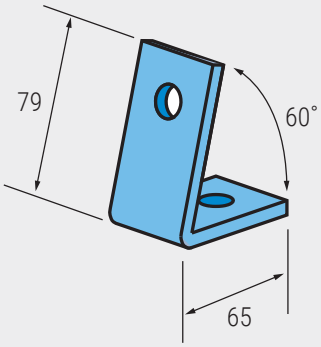

Application

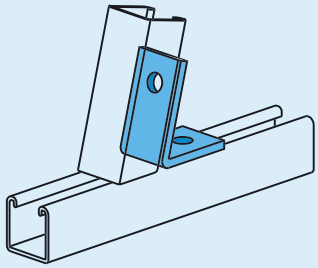

	Article number	A°		kg/ unit
●	ES2108HDG	75	25	0,24
●	ES2108SS	75	25	0,24

● In stock ● Limited stock ● On request

ES2106 | Eurostrut | 75° Angle Strut Bracket 2 Holes

SPECIFICATIONS

- Thickness 5mm.
- Available in:
  - Hot dip galvanized (HDG).
  - Stainless steel A4 / 316L (SS).
- To create metal frames with strut channels.
- For bolts M12.

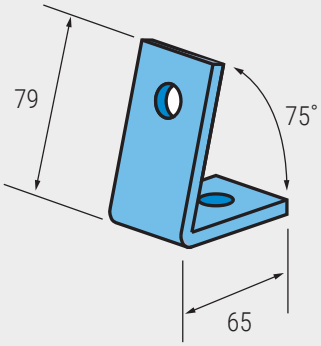

Application

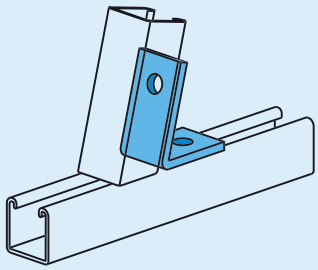

	Article number	A°		kg/ unit
●	ES2106HDG	75	25	0,24
●	ES2106SS	75	25	0,24

● In stock ● Limited stock ● On request

ES1546 | Eurostrut | 45° Angle Strut Bracket 2 Holes

SPECIFICATIONS

- Thickness 5mm.
- Available in:
  - Hot dip galvanized (HDG).
  - Stainless steel A4 / 316L (SS).
- To create metal frames with strut channels.
- For bolts M12.

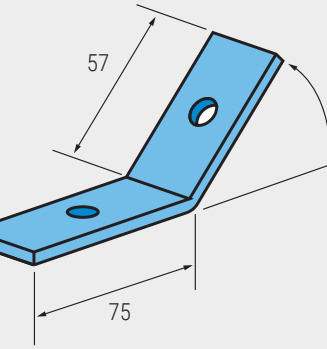

Application

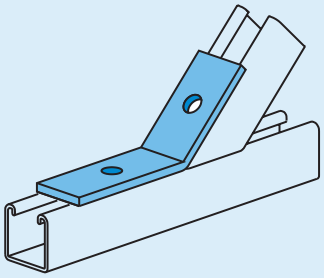

	Article number	A°		kg/ unit
●	ES1546HDG	45	25	0,26
●	ES1546SS	45	25	0,26

● In stock ● Limited stock ● On request

ES2097 | Eurostrut | 60° Angle Strut Bracket 2 Holes

SPECIFICATIONS

- Thickness 5mm.
- Available in:
  - Hot dip galvanized (HDG).
  - Stainless steel A4 / 316L (SS).
- To create metal frames with strut channels.
- For bolts M12.

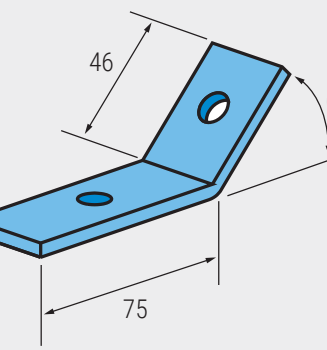

Application

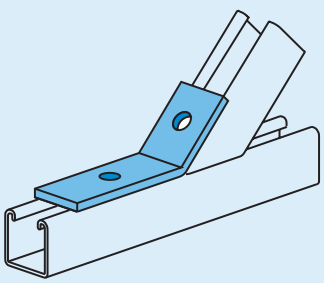

	Article number	A°		kg/ unit
●	ES2097HDG	60	25	0,18
●	ES20974SS	60	25	0,18

● In stock ● Limited stock ● On request

ES2101 | Eurostrut | 30° Angle Strut Bracket 2 Holes

SPECIFICATIONS

- Thickness 5mm.
- Available in:
  - Hot dip galvanized (HDG).
  - Stainless steel A4 / 316L (SS).
- To create metal frames with strut channels.
- For bolts M12.

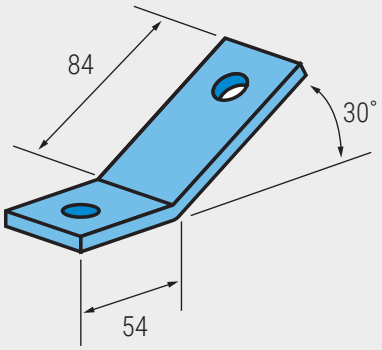

Application

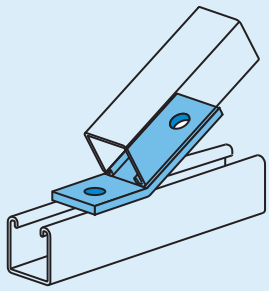

	Article number	A°		kg/ unit
●	ES2101HDG	30	25	0,26

● In stock ● Limited stock ● On request

ES1074 | Eurostrut | 45° Angle Strut Bracket 4 Holes

SPECIFICATIONS

- Thickness 5mm.
- Available in:
  - Hot dip galvanized (HDG).
  - Stainless steel A4 / 316L (SS).
- To create metal frames with strut channels.
- For bolts M12.

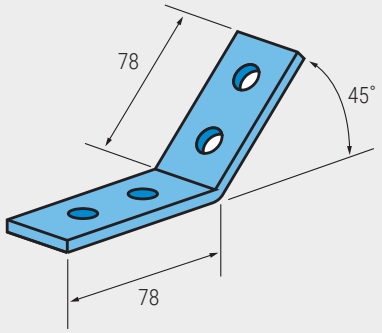

Application

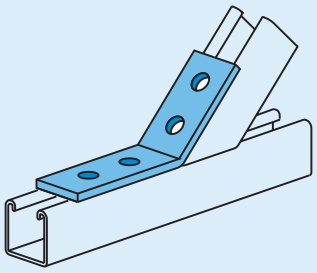

	Article number	A°		kg/ unit
●	ES1074HDG	45	25	0,29
●	ES1074SS	45	25	0,29

● In stock ● Limited stock ● On request

ES1354 | Eurostrut | Vertical Hinged Angle Bracket 4 Holes

SPECIFICATIONS

- Thickness 5mm.
- Available in:
  - Electro zinc plated (EZP).
- To create metal frames with strut channels.
- For bolts M12.

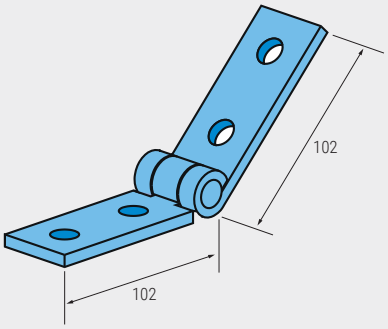

Application

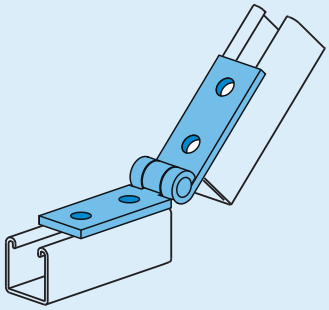

	Article number		kg/ unit
●	ES1354EZP	10	0,25

● In stock ● Limited stock ● On request

ES1047 | Eurostrut | Offset Tee Strut Bracket for 41x41 5 Holes

SPECIFICATIONS

- Thickness 5mm.
- Available in:
  - Hot dip galvanized (HDG).
  - Stainless steel A4 / 316L (SS).
- To create metal frames with strut channels.
- For bolts M12.

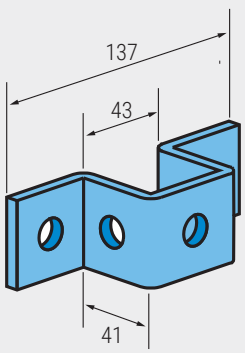

Application

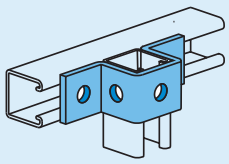

	Article number		kg/ unit
●	ES1047HDG	25	0,34
●	ES1047SS	25	0,34

● In stock ● Limited stock ● On request

| + 31 10 522 33 51 | info@eurostrut.com | eurostrut.com

ES4047 | Eurostrut | Offset Tee Strut Bracket for 21x41 5 Holes

SPECIFICATIONS

- Thickness 5mm.
- Available in:
  - Hot dip galvanized (HDG).
  - Stainless steel A4 / 316L (SS).
- To create metal frames with strut channels.
- For bolts M12.

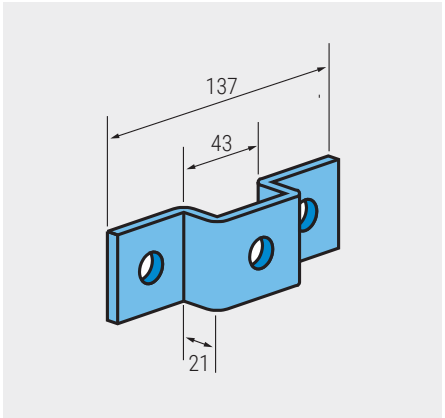

Application

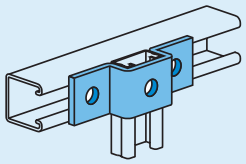

	Article number		kg/ unit
●	ES4047HDG	25	0,29
●	ES4047SS	25	0,29

● In stock ● Limited stock ● On request

ES1043 | Eurostrut | Double Offset Tee Strut Bracket for 41x41 5 Holes

SPECIFICATIONS

- Thickness 5mm.
- Available in:
  - Hot dip galvanized (HDG).
  - Stainless steel A4 / 316L (SS).
- To create metal frames with strut channels.
- For bolts M12.

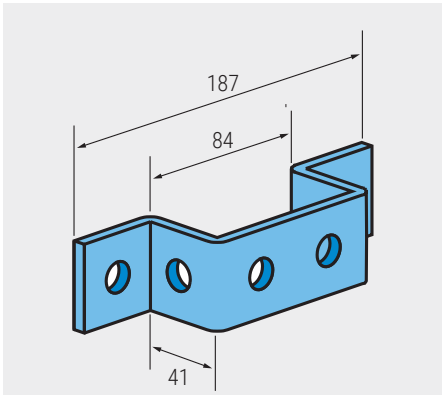

Application

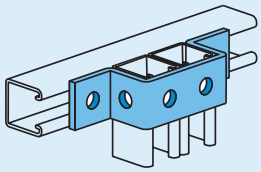

	Article number		kg/ unit
●	ES1043HDG	10	0,43
●	ES1043SS	10	0,43

● In stock ● Limited stock ● On request

ES1737 | Eurostrut | B2B Offset Tee Strut Bracket for 41x41 3 Holes

SPECIFICATIONS

- Thickness 5mm.
- Available in:
  - Hot dip galvanized (HDG).
  - Stainless steel A4 / 316L (SS).
- To create metal frames with strut channels.
- For bolts M12.

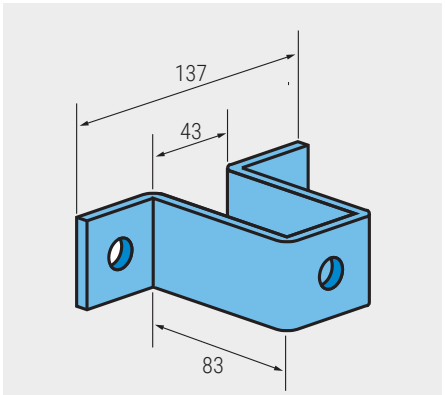

Application

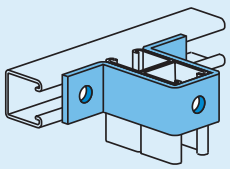

	Article number		kg/ unit
●	ES1737HDG	10	0,55
●	ES1737SS	10	0,55

● In stock ● Limited stock ● On request

ES1035 | Eurostrut | Offset Angle Strut Bracket 4 Holes Right Corner

SPECIFICATIONS

- Thickness 5mm.
- Available in:
  - Hot dip galvanized (HDG).
  - Stainless steel A4 / 316L (SS).
- To create metal frames with strut channels.
- For bolts M12.

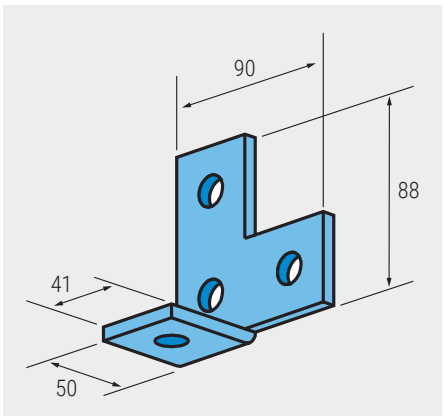

Application

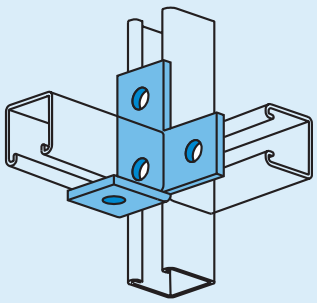

	Article number		kg/ unit
●	ES1035HDG	25	0,34
●	ES1035SS	25	0,34

● In stock ● Limited stock ● On request

ES1034 | Eurostrut | Offset Angle Strut Bracket 4 Holes Left Corner

SPECIFICATIONS

- Thickness 5mm.
- Available in:
  - Hot dip galvanized (HDG).
  - Stainless steel A4 / 316L (SS).
- To create metal frames with strut channels.
- For bolts M12.

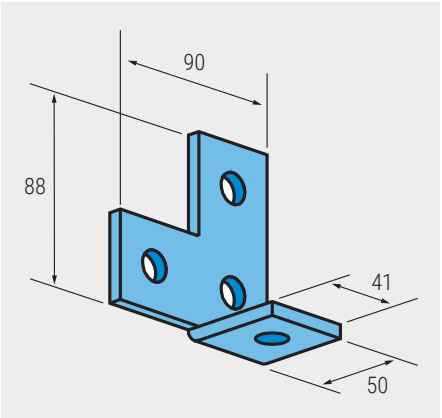

Application

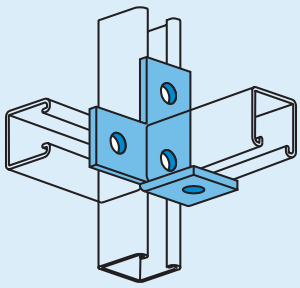

	Article number		kg/ unit
●	ES1034HDG	25	0,34
●	ES1034SS	25	0,34

● In stock ● Limited stock ● On request

ES1044 | Eurostrut | Channel Jointing Bracket 4 Holes

SPECIFICATIONS

- Thickness 5mm.
- Available in:
  - Hot dip galvanized (HDG).
  - Stainless steel A4 / 316L (SS).
- To create metal frames with strut channels.
- For bolts M12.

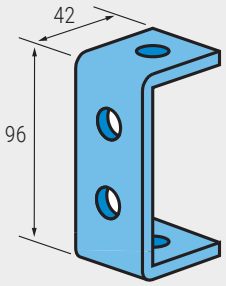

Application

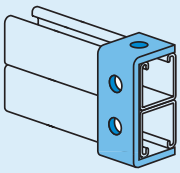

	Article number		kg/ unit
●	ES1044HDG	25	0,25
●	ES1044SS	25	0,25

● In stock ● Limited stock ● On request

ES4045 | Eurostrut | Single Cross Over Strut Bracket for 21x41 2 Holes

SPECIFICATIONS

- Thickness 5mm.
- Available in:
  - Hot dip galvanized (HDG).
  - Stainless steel A4 / 316L (SS).
- To create metal frames with strut channels.
- For bolts M12.

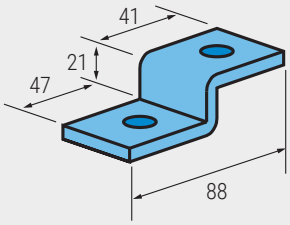

Application

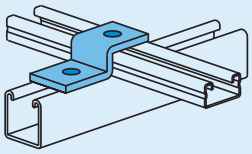

	Article number		kg/ unit
●	ES4045HDG	50	0,19
●	ES4045SS	50	0,19

● In stock ● Limited stock ● On request

ES1045 | Eurostrut | Single Cross Over Strut Bracket for 41x41 2 Holes

SPECIFICATIONS

- Thickness 5mm.
- Available in:
  - Hot dip galvanized (HDG).
  - Stainless steel A4 / 316L (SS).
- To create metal frames with strut channels.
- For bolts M12.

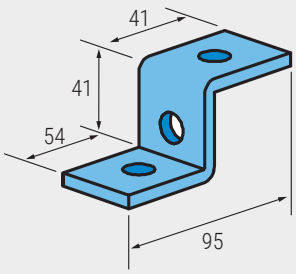

Application

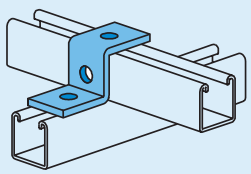

	Article number		kg/ unit
●	ES1045HDG	25	0,21
●	ES1045SS	25	0,21

● In stock ● Limited stock ● On request

| + 31 10 522 33 51 | info@eurostrut.com | eurostrut.com

ES1453 | Eurostrut | Double Cross Over Strut Bracket for 82x41 4 Holes

SPECIFICATIONS

- Thickness 5mm.
- Available in:
  - Hot dip galvanized (HDG).
  - Stainless steel A4 / 316L (SS).
- To create metal frames with strut channels.
- For bolts M12.

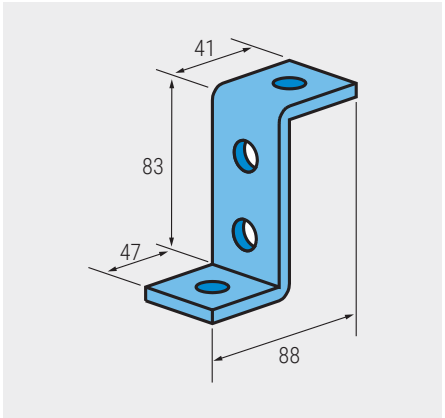

Application

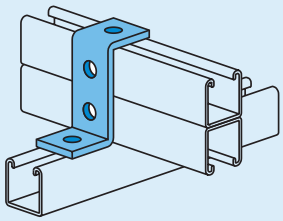

	Article number		kg/ unit
●	ES1453HDG	25	0,32
●	ES1453SS	25	0,32

● In stock ● Limited stock ● On request

ES1347 | Eurostrut | Single Cross Over Strut Bracket for 41x41 2 Holes

SPECIFICATIONS

- Thickness 5mm.
- Available in:
  - Hot dip galvanized (HDG).
  - Stainless steel A4 / 316L (SS).
- To create metal frames with strut channels.
- For bolts M12.

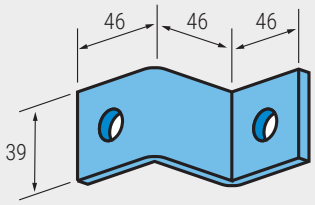

Application

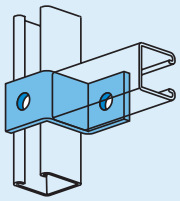

	Article number		kg/ unit
●	ES1347HDG	25	0,24
●	ES1347SS	25	0,24

● In stock ● Limited stock ● On request

ES1736 | Eurostrut | Z Shaped Fitting

SPECIFICATIONS

- Thickness 5mm.
- Available in:
  - Hot dip galvanized (HDG).
  - Stainless steel A4 / 316L (SS).
- To create metal frames with strut channels.
- For bolts M12.

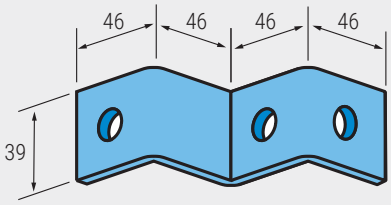

Application

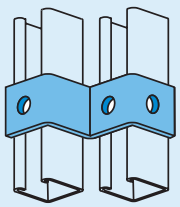

	Article number		kg/ unit
●	ES1736HDG	25	0,27
●	ES1736SS	25	0,27

● In stock ● Limited stock ● On request

ES1834 | Eurostrut | Trolley Hanger

SPECIFICATIONS

- Thickness 5mm.
- Available in:
  - Hot dip galvanized (HDG).
  - Stainless steel A4 / 316L (SS).
- To create metal frames with strut channels.
- For bolts M12.

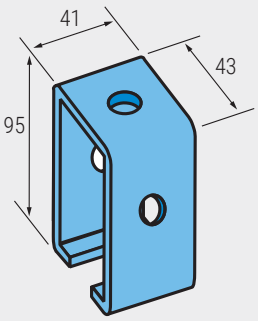

Application

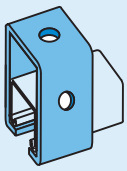

	Article number		kg/ unit
●	ES1834HDG	25	0,35
●	ES1834SS	25	0,35

● In stock ● Limited stock ● On request

ES2346 | Eurostrut | Transversal Wing Strut Bracket 8 Holes

SPECIFICATIONS

- Thickness 5mm.
- Available in:
  - Hot dip galvanized (HDG).
  - Stainless steel A4 / 316L (SS).
- To create metal frames with strut channels.
- For bolts M12.

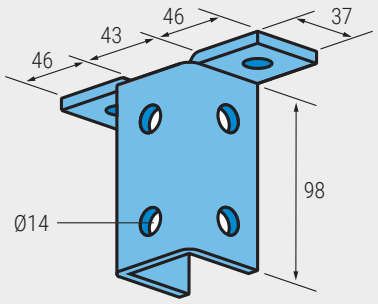

Application

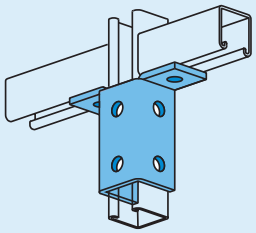

	Article number		kg/ unit
●	ES2346HDG	10	0,60
●	ES2346SS	10	0,60

● In stock ● Limited stock ● On request

ES2341R | Eurostrut | Wing Fitting Right Handed 2 Holes

SPECIFICATIONS

- Thickness 5mm.
- Available in:
  - Hot dip galvanized (HDG).
  - Stainless steel A4 / 316L (SS).
- To create metal frames with strut channels.
- For bolts M12.

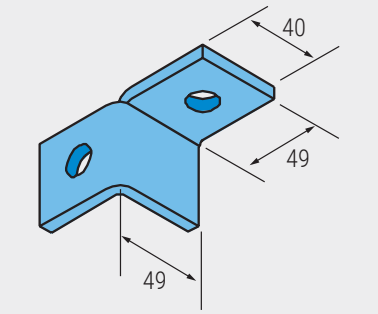

Application

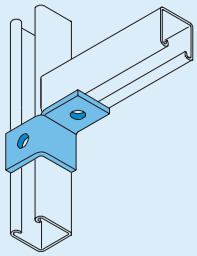

	Article number		kg/ unit
●	ES2341RHDG	25	0,21
●	ES2341RSS	25	0,21

● In stock ● Limited stock ● On request

ES2341L | Eurostrut | Wing Fitting Left Handed 2 Holes

SPECIFICATIONS

- Thickness 5mm.
- Available in:
  - Hot dip galvanized (HDG).
  - Stainless steel A4 / 316L (SS).
- To create metal frames with strut channels.
- For bolts M12.

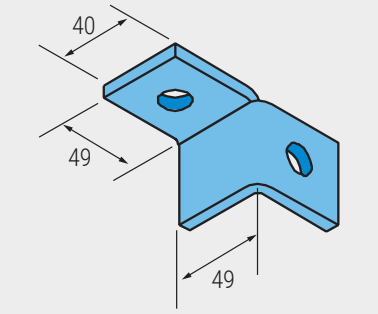

Application

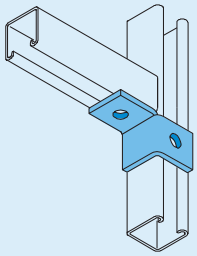

	Article number		kg/ unit
●	ES2341LHDG	25	0,21
●	ES2341LSS	25	0,21

● In stock ● Limited stock ● On request

ES2223 | Eurostrut | Wing Fitting Right-Left Handed 4 Holes

SPECIFICATIONS

- Thickness 5mm.
- Available in:
  - Hot dip galvanized (HDG).
  - Stainless steel A4 / 316L (SS).
- To create metal frames with strut channels.
- For bolts M12.

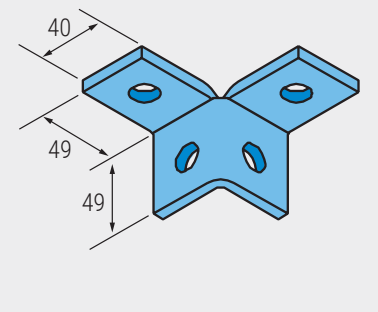

Application

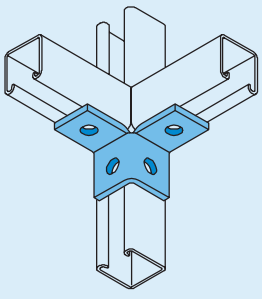

	Article number		kg/ unit
●	ES2223HDG	25	0,35
●	ES2223SS	25	0,35

● In stock ● Limited stock ● On request

ES2224 | Eurostrut | Wing Shape Fitting

SPECIFICATIONS

- Thickness 5mm.
- Available in:
  - Hot dip galvanized (HDG).
  - Stainless steel A4 / 316L (SS).
- To create metal frames with strut channels.
- For bolts M12.

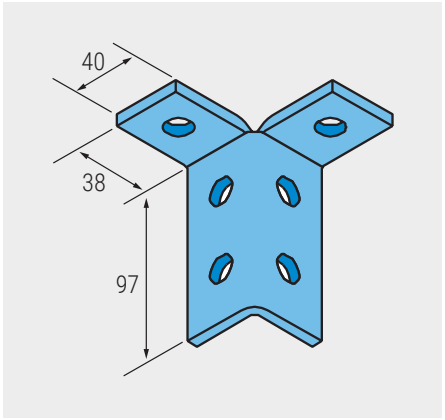

Application

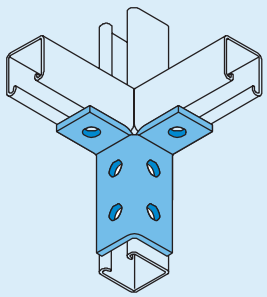

	Article number		kg/ unit
●	ES2224HDG	25	0,49
●	ES2224SS	25	0,49

● In stock ● Limited stock ● On request

ES2228 | Eurostrut | Wing Shape Fitting

SPECIFICATIONS

- Thickness 5mm.
- Available in:
  - Hot dip galvanized (HDG).
  - Stainless steel A4 / 316L (SS).
- To create metal frames with strut channels.
- For bolts M12.

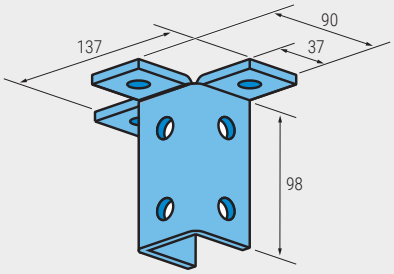

Application

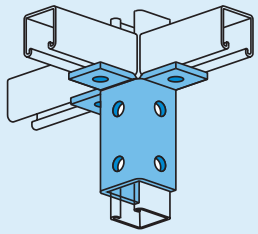

	Article number		kg/ unit
●	ES2228HDG	25	0,67
●	ES2228SS	25	0,67

● In stock ● Limited stock ● On request

ES2072-S1 | Eurostrut | Single Base Plate for 41x41 2 Holes

SPECIFICATIONS

- Thickness 5mm.
- Available in:
  - Hot dip galvanized (HDG).
  - Stainless steel A4 / 316L (SS).
- To create metal frames with strut channels.
- For bolts M12.

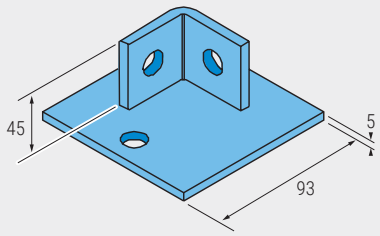

Application

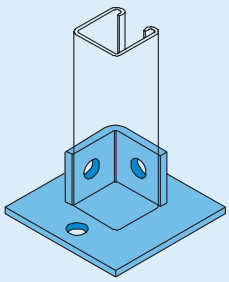

	Article number		kg/ unit
●	ES2072-S1HDG	25	0,57
●	ES2072-S1SS	25	0,57

● In stock ● Limited stock ● On request

ES2072-S2 | Eurostrut | Single Base Plate for 41x41 1 Hole

SPECIFICATIONS

- Thickness 5mm.
- Available in:
  - Hot dip galvanized (HDG).
  - Stainless steel A4 / 316L (SS).
- To create metal frames with strut channels.
- For bolts M12.

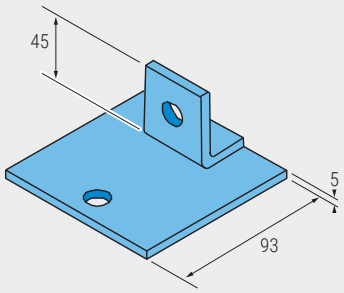

Application

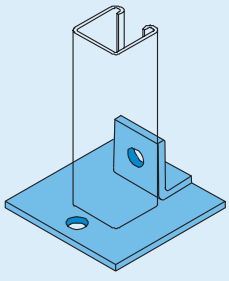

	Article number		kg/ unit
●	ES2072-S2HDG	25	0,40
●	ES2072-S2SS	25	0,40

● In stock ● Limited stock ● On request

ES2072ASQ | Eurostrut | Base Mounting Bracket for 41x41 6 Holes

SPECIFICATIONS

- Thickness 5mm.
- Available in:
  - Hot dip galvanized (HDG).
  - Stainless steel A4 / 316L (SS).
- To create metal frames with strut channels.
- For bolts M12.

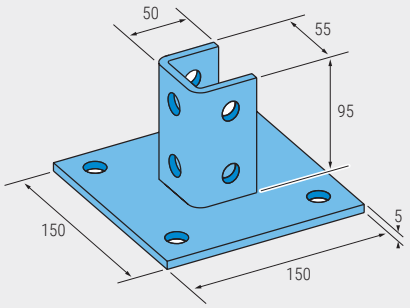

Application

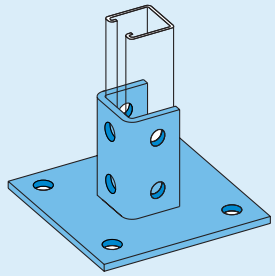

	Article number		kg/ unit
●	ES2072ASQHDG	1	1,74
●	ES2072ASQSS	1	1,74

● In stock ● Limited stock ● On request

ES2073ASQ | Eurostrut | Double Base Plate for 82x41 8 Holes

SPECIFICATIONS

- Thickness 5mm.
- Available in:
  - Hot dip galvanized (HDG).
  - Stainless steel A4 / 316L (SS).
- To create metal frames with strut channels.
- For bolts M12.

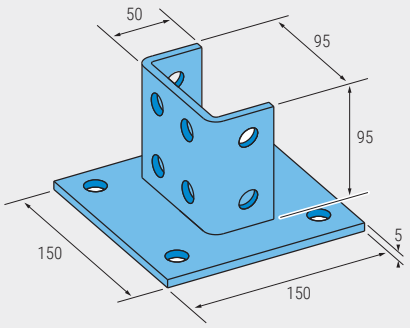

Application

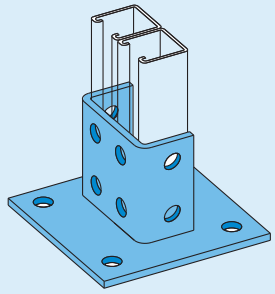

	Article number		kg/ unit
●	ES2073ASQHDG	1	1,85
●	ES2073ASQSS	1	1,85

● In stock ● Limited stock ● On request

ES2073 | Eurostrut | Double Base Plate for 82x41 4 Holes

SPECIFICATIONS

- Thickness 5mm.
- Available in:
  - Hot dip galvanized (HDG).
  - Stainless steel A4 / 316L (SS).
- To create metal frames with strut channels.
- For bolts M12.

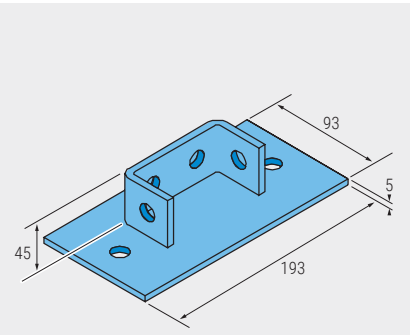

Application

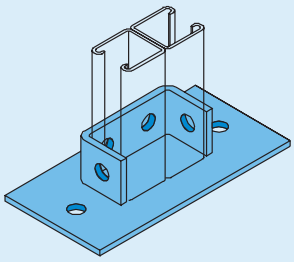

	Article number		kg/ unit
●	ES2073HDG	5	1,10
●	ES2073SS	5	1,10

● In stock ● Limited stock ● On request

ES2348-S1 | Eurostrut | Base Mounting Bracket for 41x41 4 Holes

SPECIFICATIONS

- Thickness 5mm.
- Available in:
  - Hot dip galvanized (HDG).
  - Stainless steel A4 / 316L (SS).
- To create metal frames with strut channels.
- For bolts M12.

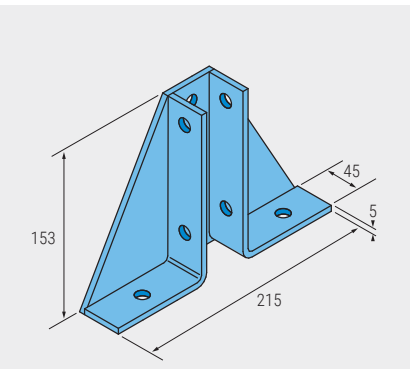

Application

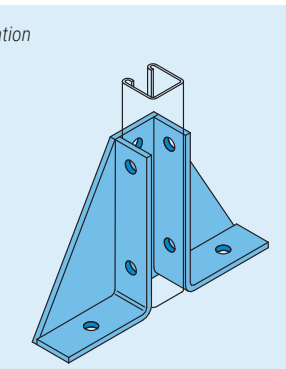

	Article number		kg/ unit
●	ES2348-S1HDG	1	1,40
●	ES2348-S1SS	1	1,40

● In stock ● Limited stock ● On request

ES2348-S2 | Eurostrut | Base Mounting Bracket for 82x41 4 Holes

SPECIFICATIONS

- Thickness 5mm.
- Available in:
  - Hot dip galvanized (HDG).
  - Stainless steel A4 / 316L (SS).
- To create metal frames with strut channels.
- For bolts M12.

	Article number		kg/ unit
●	ES2348-S2HDG	1	1,50
●	ES2348-S2SS	1	1,50

● In stock ● Limited stock ● On request

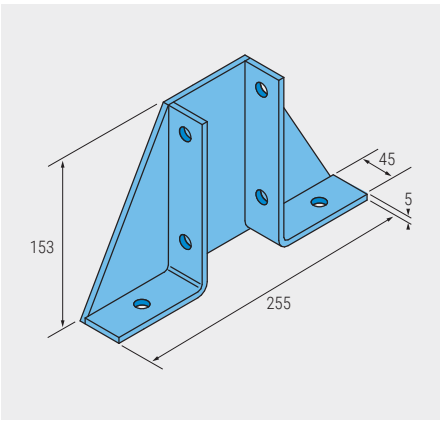

Application

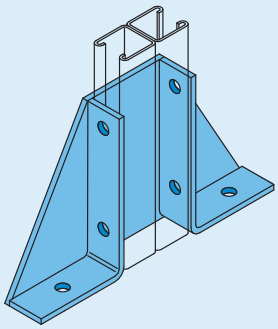

ES1887 | Eurostrut | Base Plate

SPECIFICATIONS

- Thickness 5mm.
- Available in:
  - Hot dip galvanized (HDG).
  - Stainless steel A4 / 316L (SS).
- To create metal frames with strut channels.
- For bolts M12.

	Article number		kg/ unit
●	ES1887HDG	1	1,50
●	ES1887SS	1	1,50

● In stock ● Limited stock ● On request

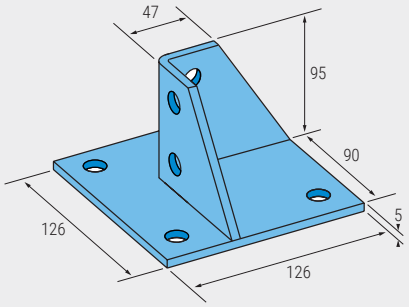

Application

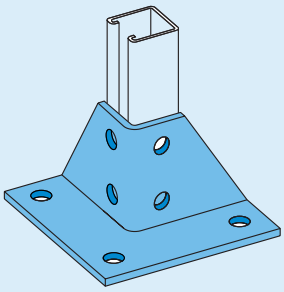

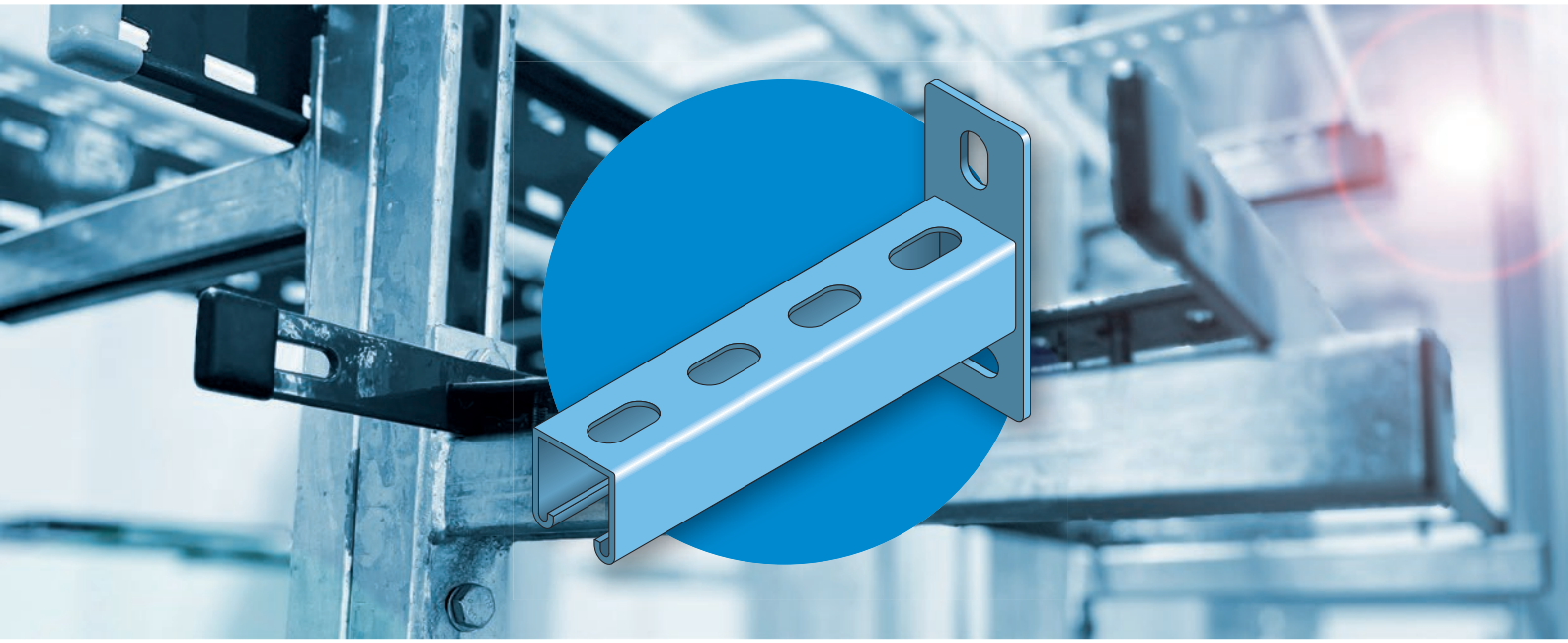

Mounting Systems
Eurostrut Support Systems



Stay up to date!

Follow **@eurostrut** on social media and sign in to our newsletter:
www.eurostrut.com/en/newsletter

General conditions

- Eurostrut Support Systems & Solutions B.V. is not liable for cable management systems that are incorrectly installed or where different parts or maintenance methods are applied.
- Although the product information shown in this catalog is accurate and reliable, Eurostrut Support Systems & Solutions B.V. can not be held responsible and liable for inaccuracies.
- The performance data are specific and may be subject to variations due to normal manufacturing tolerances.
- Eurostrut Support Systems & Solutions B.V. reserves the right to change performance information or specifications at any time without notice.

2ba

The convenience of 2ba

Eurostrut's products are listed with all associated information in 2BA's central article database. Product, price and stock information must be continuously available in order to operate efficiently. The 2BA data pool offers the solution.
2ba.nl

The main advantages of 2BA:

- Design, calculate and order more efficiently because all product and price information comes from the same source.
- Data is directly available via the leading ERP software packages or your own custom system.
- You have your own net purchase prices based on Eurostrut's agreed purchasing conditions.

Eurostrut is **ISO 9001 certified**, ensuring quality management across all processes to meet customer requirements and specifications.

By achieving **step 3** certification on the **CO_2 Performance Ladder**, Eurostrut demonstrates its commitment to environmental responsibility and fostering a healthy living environment.

ES2633T | Eurostrut | Slotted Strut Cantilever Arm 21x41x2,5mm

SPECIFICATIONS

- Easy to adjust.
- Available in:
  - Carbon steel, hot dip galvanized (HDG), in accordance with NEN-EN-ISO 1461.
  - Stainless steel A4 / 316L (SS).
  - Carbon steel, electro zinc plated (EZP).
- Lengths 150, 450 and 750mm on request.

Available surface finishes	Change HDG to	Stock
Hot dip galvanized	-	●
Stainless steel A4 / 316L	SS	●
Electro zinc plated	EZP	●



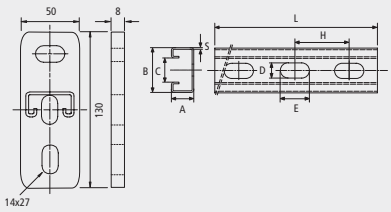

	Article number	L mm	AxBxS mm	C mm	DxE mm	H mm		kg/ unit
●	ES2633T/100HDG	100	21x41x2,5	22,3	11x27	50	1	0,53
●	ES2633T/150HDG	150	21x41x2,5	22,3	11x27	50	1	0,66
●	ES2633T/200HDG	200	21x41x2,5	22,3	11x27	50	1	0,74
●	ES2633T/300HDG	300	21x41x2,5	22,3	11x27	50	1	0,92
●	ES2633T/400HDG	400	21x41x2,5	22,3	11x27	50	1	0,99
●	ES2633T/450HDG	450	21x41x2,5	22,3	11x27	50	1	1,19
●	ES2633T/500HDG	500	21x41x2,5	22,3	11x27	50	1	1,32
●	ES2633T/600HDG	600	21x41x2,5	22,3	11x27	50	1	1,45
●	ES2633T/700HDG	700	21x41x2,5	22,3	11x27	50	1	1,58
●	ES2633T/750HDG	750	21x41x2,5	22,3	11x27	50	1	1,64
●	ES2633T/800HDG	800	21x41x2,5	22,3	11x27	50	1	1,71
●	ES2633T/900HDG	900	21x41x2,5	22,3	11x27	50	1	1,84
●	ES2633T/1000HDG	1000	21x41x2,5	22,3	11x27	50	1	1,97

● In stock ● Limited stock ● On request

σ_{zul}=160 N/mm
f_{zul}=l/200

LOAD DATA

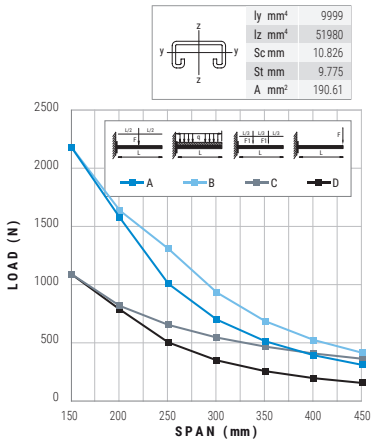

ES2663T | Eurostrut | Slotted Strut Cantilever Arm 41x41x2,5mm

SPECIFICATIONS

- Easy to adjust.
- Available in:
  - Carbon steel, hot dip galvanized (HDG), in accordance with NEN-EN-ISO 1461.
  - Stainless steel A4 / 316L (SS).
  - Carbon steel, electro zinc plated (EZP).
- Lengths 150, 450 and 750mm on request.

Available surface finishes	Change HDG to	Stock
Hot dip galvanized	-	●
Stainless steel A4 / 316L	SS	●
Electro zinc plated	EZP	●



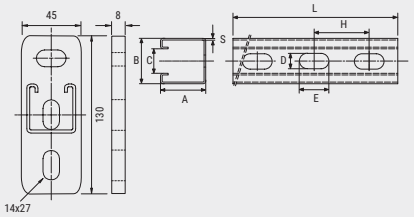

	Article number	L mm	AxBxS mm	C mm	DxE mm	H mm		kg/ unit
●	ES2663T/100HDG	100	41x41x2,5	22,3	14x27	50	1	0,71
●	ES2663T/150HDG	150	41x41x2,5	22,3	14x27	50	1	0,83
●	ES2663T/200HDG	200	41x41x2,5	22,3	14x27	50	1	0,95
●	ES2663T/300HDG	300	41x41x2,5	22,3	14x27	50	1	1,33
●	ES2663T/400HDG	400	41x41x2,5	22,3	14x27	50	1	1,45
●	ES2663T/450HDG	450	41x41x2,5	22,3	14x27	50	1	1,60
●	ES2663T/500HDG	500	41x41x2,5	22,3	14x27	50	1	1,72
●	ES2663T/600HDG	600	41x41x2,5	22,3	14x27	50	1	1,97
●	ES2663T/700HDG	700	41x41x2,5	22,3	14x27	50	1	2,22
●	ES2663T/750HDG	750	41x41x2,5	22,3	14x27	50	1	2,35
●	ES2663T/800HDG	800	41x41x2,5	22,3	14x27	50	1	2,47
●	ES2663T/900HDG	900	41x41x2,5	22,3	14x27	50	1	2,75
●	ES2663T/1000HDG	1000	41x41x2,5	22,3	14x27	50	1	2,99

● In stock ● Limited stock ● On request

σ_{zul}=160 N/mm
f_{zul}=l/200

LOAD DATA

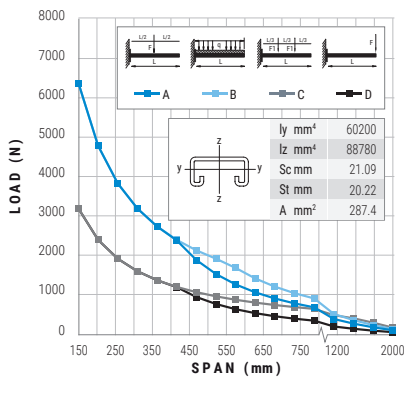

ES2631T | Eurostrut | Slotted Strut Cantilever Arm 2x(21x41x2,5mm)

SPECIFICATIONS

- Spot welded back to back.
- Available in:
  - Carbon steel, hot dip galvanized (HDG), in accordance with NEN-EN-ISO 1461.
  - Stainless steel A4 / 316L (SS).
  - Carbon steel, electro zinc plated (EZP).
- Lengths 150, 450 and 750mm on request.

Available surface finishes	Change HDG to	Stock
Hot dip galvanized	-	●
Stainless steel A4 / 316L	SS	●
Electro zinc plated	EZP	●



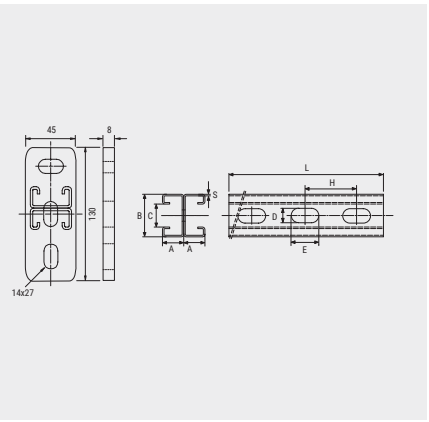

	Article number	L mm	AxBxS mm	C mm	DxE mm	H mm		kg/ unit
●	ES2631T/100HDG	100	21x41x2,5	22,3	11x27	50	1	0,39
●	ES2631T/150HDG	150	21x41x2,5	22,3	11x27	50	1	0,65
●	ES2631T/200HDG	200	21x41x2,5	22,3	11x27	50	1	0,92
●	ES2631T/300HDG	300	21x41x2,5	22,3	11x27	50	1	1,45
●	ES2631T/400HDG	400	21x41x2,5	22,3	11x27	50	1	1,90
●	ES2631T/450HDG	450	21x41x2,5	22,3	11x27	50	1	1,97
●	ES2631T/500HDG	500	21x41x2,5	22,3	11x27	50	1	2,40
●	ES2631T/600HDG	600	21x41x2,5	22,3	11x27	50	1	2,50
●	ES2631T/700HDG	700	21x41x2,5	22,3	11x27	50	1	2,95
●	ES2631T/750HDG	750	21x41x2,5	22,3	11x27	50	1	3,04
●	ES2631T/800HDG	800	21x41x2,5	22,3	11x27	50	1	3,31
●	ES2631T/900HDG	900	21x41x2,5	22,3	11x27	50	1	3,86
●	ES2631T/1000HDG	1000	21x41x2,5	22,3	11x27	50	1	4,49

● In stock ● Limited stock ● On request

σ_{zul}=160 N/mm
f_{zul}=l/200

LOAD DATA

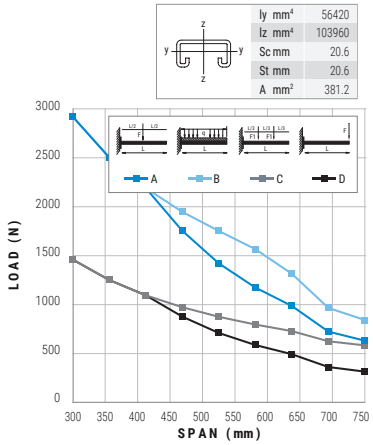

ES2665T | Eurostrut | Slotted Strut Cantilever Arm 2x(41x41x2,5mm)

SPECIFICATIONS

- Spot welded back to back.
- Available in:
  - Carbon steel, hot dip galvanized (HDG), in accordance with NEN-EN-ISO 1461.
  - Stainless steel A4 / 316L (SS).
  - Carbon steel, electro zinc plated (EZP).
- Lengths 150, 450 and 750mm on request.

Available surface finishes	Change HDG to	Stock
Hot dip galvanized	-	●
Stainless steel A4 / 316L	SS	●
Electro zinc plated	EZP	●



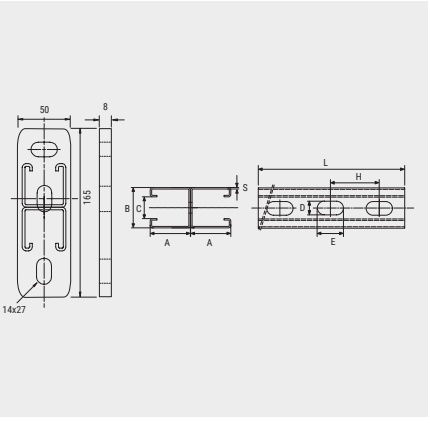

	Article number	L mm	AxBxS mm	C mm	DxE mm	H mm		kg/ unit
●	ES2665T/100HDG	100	41x41x2,5	22,3	14x27	50	1	1,13
●	ES2665T/150HDG	150	41x41x2,5	22,3	14x27	50	1	1,15
●	ES2665T/200HDG	200	41x41x2,5	22,3	14x27	50	1	1,56
●	ES2665T/300HDG	300	41x41x2,5	22,3	14x27	50	1	2,07
●	ES2665T/400HDG	400	41x41x2,5	22,3	14x27	50	1	2,58
●	ES2665T/450HDG	450	41x41x2,5	22,3	14x27	50	1	2,83
●	ES2665T/500HDG	500	41x41x2,5	22,3	14x27	50	1	3,09
●	ES2665T/600HDG	600	41x41x2,5	22,3	14x27	50	1	3,59
●	ES2665T/700HDG	700	41x41x2,5	22,3	14x27	50	1	4,11
●	ES2665T/750HDG	750	41x41x2,5	22,3	14x27	50	1	4,36
●	ES2665T/800HDG	800	41x41x2,5	22,3	14x27	50	1	4,61
●	ES2665T/900HDG	900	41x41x2,5	22,3	14x27	50	1	5,12
●	ES2665T/1000HDG	1000	41x41x2,5	22,3	14x27	50	1	5,88

● In stock ● Limited stock ● On request

σ_{zul}=160 N/mm
f_{zul}=l/200

LOAD DATA

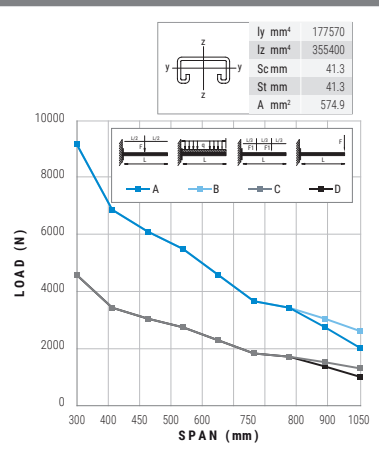

| + 31 10 522 33 51 | info@eurostrut.com | eurostrut.com

ES2668T | Eurostrut | Rotated Slotted Strut Cantilever Arm 41x41x2,5mm

SPECIFICATIONS

- Easy to adjust.
- Available in:
  - Carbon steel, hot dip galvanized (HDG), in accordance with NEN-EN-ISO 1461.
  - Stainless steel A4 / 316L (SS).
  - Carbon steel, electro zinc plated (EZP).
- Lengths 150, 450 and 750mm on request.

Available surface finishes	Change HDG to	Stock
Hot dip galvanized	-	●
Stainless steel A4 / 316L	SS	●
Electro zinc plated	EZP	●

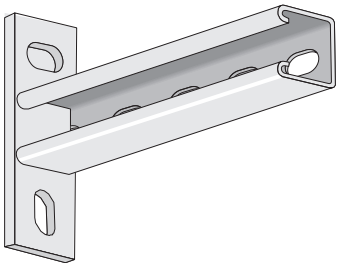

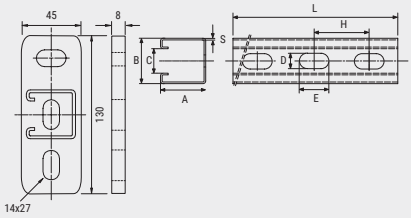

	Article number	L mm	AxBxS mm	C mm	DxE mm	H mm		kg/ unit
●	ES2668T/100HDG	100	41x41x2,5	22,3	14x27	50	1	0,47
●	ES2668T/150HDG	150	41x41x2,5	22,3	14x27	50	1	0,86
●	ES2668T/200HDG	200	41x41x2,5	22,3	14x27	50	1	0,86
●	ES2668T/300HDG	300	41x41x2,5	22,3	14x27	50	1	1,25
●	ES2668T/400HDG	400	41x41x2,5	22,3	14x27	50	1	1,32
●	ES2668T/450HDG	450	41x41x2,5	22,3	14x27	50	1	1,48
●	ES2668T/500HDG	500	41x41x2,5	22,3	14x27	50	1	1,62
●	ES2668T/600HDG	600	41x41x2,5	22,3	14x27	50	1	2,03
●	ES2668T/700HDG	700	41x41x2,5	22,3	14x27	50	1	2,13
●	ES2668T/750HDG	750	41x41x2,5	22,3	14x27	50	1	2,26
●	ES2668T/800HDG	800	41x41x2,5	22,3	14x27	50	1	2,39
●	ES2668T/900HDG	900	41x41x2,5	22,3	14x27	50	1	2,59
●	ES2668T/1000HDG	1000	41x41x2,5	22,3	14x27	50	1	2,79

● In stock ● Limited stock ● On request

σ_{zul}=160 N/mm
f_{zul}=l/200

LOAD DATA

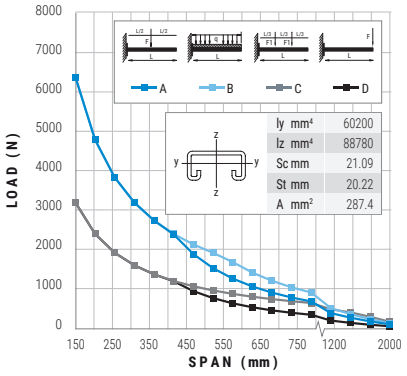

ESCON300/200 | Eurostrut | Heavy Duty Wall Bracket

SPECIFICATIONS

- Triangular shaped welded bracket manufactured from hot rolled steel.
- Perforated on two sides.
- Suitable for installation in two directions.
- Material: Steel
- Finish: Hot dip galvanized

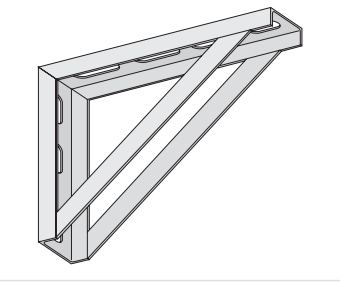

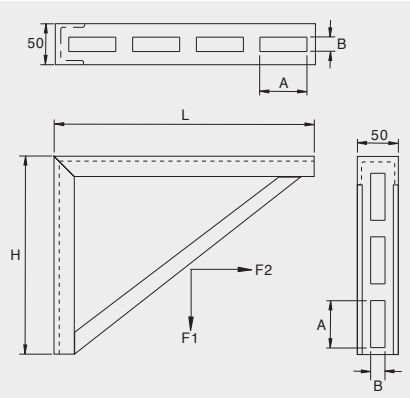

	Article number	H mm	L mm	A mm	B mm	Static load 1 F1 N	Static load 2 F2 N
●	ESCON300/200	240	315	63	19	4000	8000

● In stock ● Limited stock ● On request

ESCON550/350 | Eurostrut | Heavy Duty Wall Bracket

SPECIFICATIONS

- Triangular shaped welded bracket manufactured from hot rolled steel.
- Perforated on two sides.
- Suitable for installation in two directions.
- Material: Steel
- Finish: Hot dip galvanized

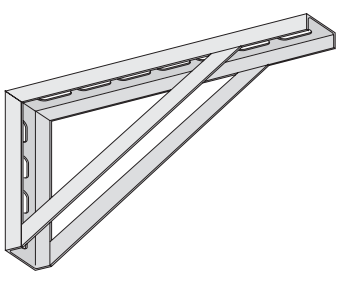

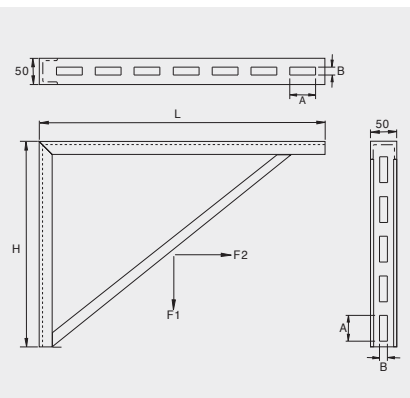

	Article number	H mm	L mm	A mm	B mm	Static load 1 F1 N	Static load 2 F2 N
●	ESCON550/350	350	550	63	19	4000	8000

● In stock ● Limited stock ● On request

EHDBB | Eurostrut | Heavy Duty Beam Bracket

SPECIFICATIONS

- Surface finish:
  - Hot dip galvanized (HDG)
  - Stainless steel 316L (SS316)
  - Stainless steel 304 (SS304)

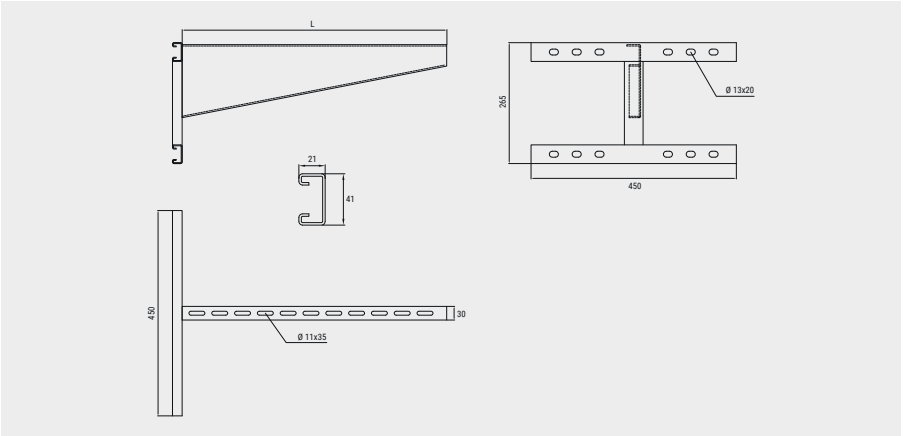

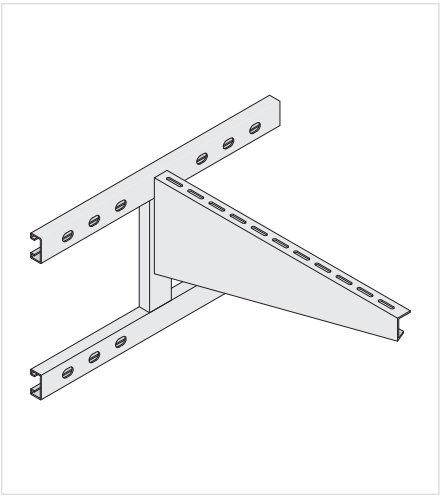

	Article number HDG		Article number SS316		Article number SS304	L mm	t mm
●	EHDBB200-HDG	●	EHDBB200-SS316	●	EHDBB200-SS304	280	3
●	EHDBB300-HDG	●	EHDBB300-SS316	●	EHDBB300-SS304	380	3
●	EHDBB400-HDG	●	EHDBB400-SS316	●	EHDBB400-SS304	480	3
●	EHDBB500-HDG	●	EHDBB500-SS316	●	EHDBB500-SS304	580	3
●	EHDBB600-HDG	●	EHDBB600-SS316	●	EHDBB600-SS304	680	3
●	EHDBB700-HDG	●	EHDBB700-SS316	●	EHDBB700-SS304	780	3
●	EHDBB800-HDG	●	EHDBB800-SS316	●	EHDBB800-SS304	880	3
●	EHDBB900-HDG	●	EHDBB900-SS316	●	EHDBB900-SS304	980	3
●	EHDBB1000-HDG	●	EHDBB1000-SS316	●	EHDBB1000-SS304	1080	3
●	EHDBB1100-HDG	●	EHDBB1100-SS316	●	EHDBB1100-SS304	1180	3

● In stock ● Limited stock ● On request

ELDWB | Eurostrut | Light Duty Wall Bracket

SPECIFICATIONS

- Surface finish:
  - Hot dip galvanized (HDG)
  - Stainless steel 316L (SS316)
  - Stainless steel 304 (SS304)

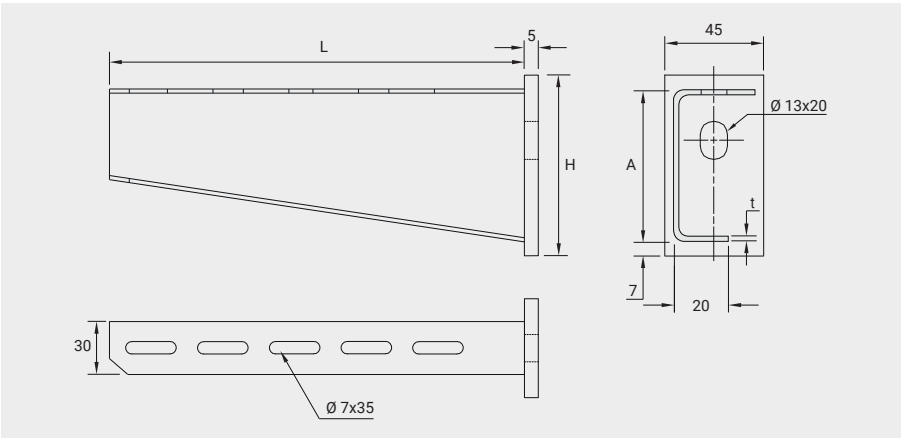

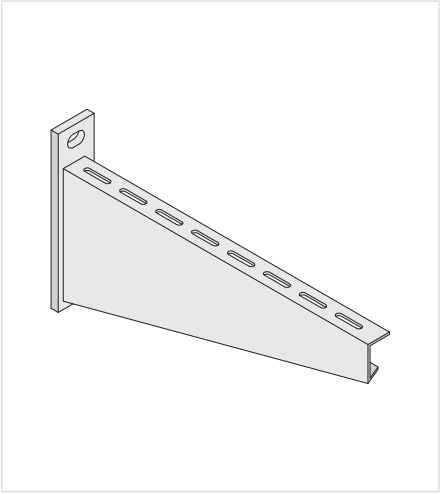

	Article number HDG		Article number SS316		Article number SS304	L mm	A mm	H mm	t mm
●	ELDWB100-HDG	●	ELDWB100-SS316	●	ELDWB100-SS304	120	83	97	1,5
●	ELDWB150-HDG	●	ELDWB150-SS316	●	ELDWB150-SS304	170	83	97	1,5
●	ELDWB200-HDG	●	ELDWB200-SS316	●	ELDWB200-SS304	220	83	97	1,5
●	ELDWB300-HDG	●	ELDWB300-SS316	●	ELDWB300-SS304	320	83	97	1,5
●	ELDWB400-HDG	●	ELDWB400-SS316	●	ELDWB400-SS304	420	103	117	2,0
●	ELDWB500-HDG	●	ELDWB500-SS316	●	ELDWB500-SS304	520	103	117	2,0
●	ELDWB600-HDG	●	ELDWB600-SS316	●	ELDWB600-SS304	620	103	117	2,0
●	ELDWB700-HDG	●	ELDWB700-SS316	●	ELDWB700-SS304	720	103	117	2,0

● In stock ● Limited stock ● On request

EHDWB | Eurostrut | Heavy Duty Wall Bracket

SPECIFICATIONS

- Surface finish:
  - Hot dip galvanized (HDG)
  - Stainless steel 316L (SS316)
  - Stainless steel 304 (SS304)

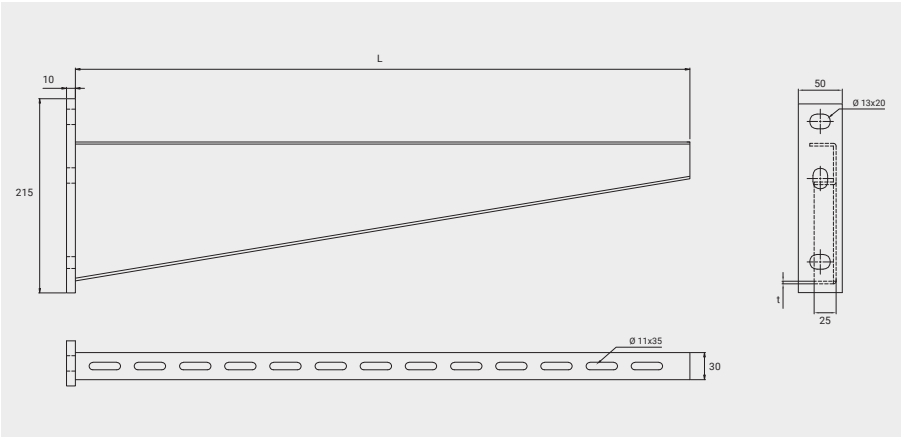

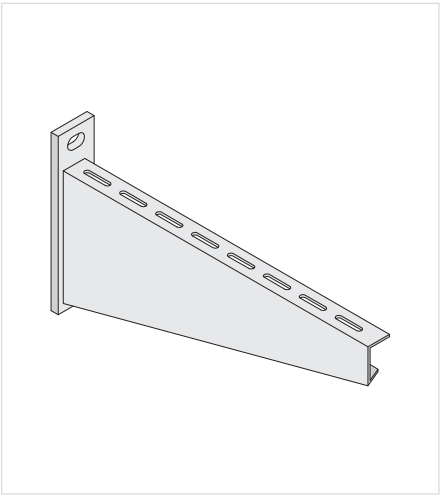

	Article number HDG		Article number SS316		Article number SS304	L mm	t mm
●	EHDWB200-HDG	●	EHDWB200-SS316	●	EHDWB200-SS304	280	3
●	EHDWB300-HDG	●	EHDWB300-SS316	●	EHDWB300-SS304	380	3
●	EHDWB400-HDG	●	EHDWB400-SS316	●	EHDWB400-SS304	480	3
●	EHDWB500-HDG	●	EHDWB500-SS316	●	EHDWB500-SS304	580	3
●	EHDWB600-HDG	●	EHDWB600-SS316	●	EHDWB600-SS304	680	3
●	EHDWB700-HDG	●	EHDWB700-SS316	●	EHDWB700-SS304	780	3
●	EHDWB800-HDG	●	EHDWB800-SS316	●	EHDWB800-SS304	880	3
●	EHDWB900-HDG	●	EHDWB900-SS316	●	EHDWB900-SS304	980	3
●	EHDWB1000-HDG	●	EHDWB1000-SS316	●	EHDWB1000-SS304	1080	3
●	EHDWB1100-HDG	●	EHDWB1100-SS316	●	EHDWB1100-SS304	1180	3

● In stock ● Limited stock ● On request



Eurostrut® | Cable Management Systems & Solutions

+ 31 10 522 33 51 | info@eurostrut.com | **eurostrut.com**

© 2026 Eurostrut BV - V.2026.01