Product Datasheet

EVHCP60
Hinged Coupler Plate Vertical Cable Ladder ECL60

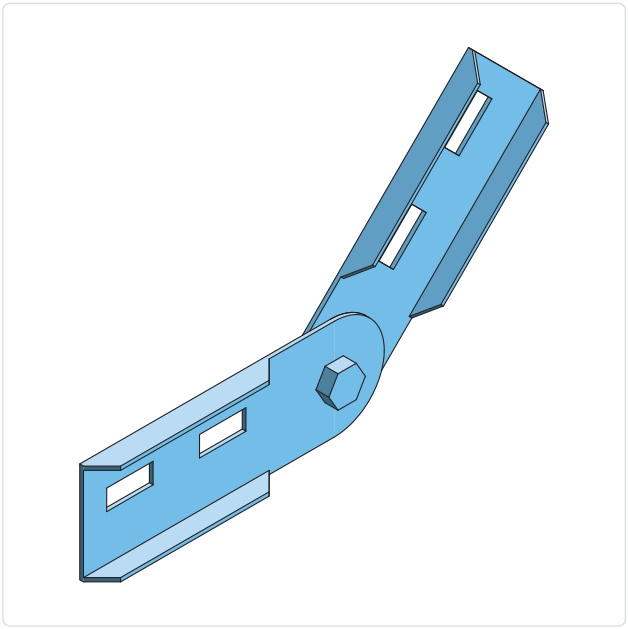

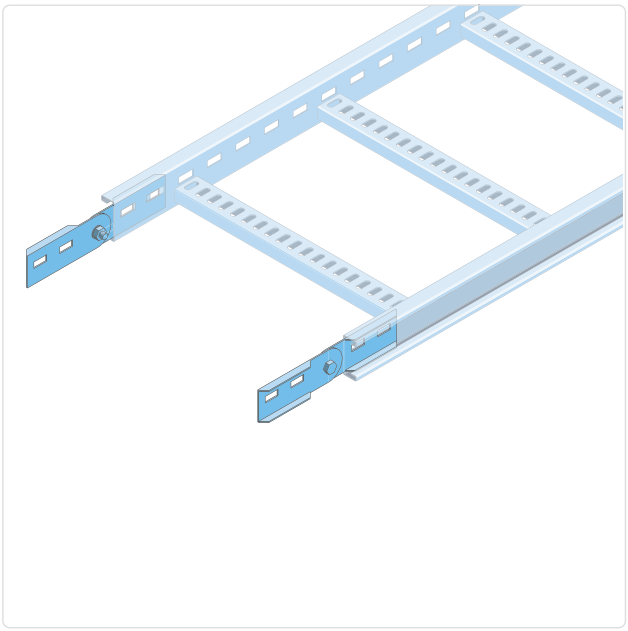

- Standard execution **hot dip galvanized carbon steel** in accordance with NEN-EN-ISO 1461
- High zinc coating thickness of **at least 60 µm**
- Also available in **stainless steel 304** and **stainless steel 316L**

Description

The Eurostrut EVHCP60 Heavy Duty vertical hinged coupling plate is a connection component for the ECL60 cable ladder system and is used to mechanically connect cable ladder sections at variable vertical angles. The hinged design allows height differences and vertical changes of direction within a cable ladder route without requiring a fixed inside or outside riser. The coupling plate is installed at the side rails and is suitable for industrial, commercial, and infrastructure installations.

The standard EVHCP60-HDG version is manufactured from carbon steel with a material thickness of 2.0 mm. The steel is hot dip galvanized according to NEN-EN-ISO 1461, with a zinc coating thickness of 60 to 70 µm. Hot dip galvanizing provides corrosion protection for the steel coupling plate in industrial installations and outdoor environments. The coupling plate is also available in stainless steel AISI 304 (1.4301) and AISI 316L (1.4404). A RAL powder-coated version is available on request.

The EVHCP60 vertical hinged coupling plate has a height of 54 mm and an overall length of 270 mm. The Heavy Duty version is manufactured from 2.0 mm steel and consists of hinged plate sections that allow adjoining cable ladders to be positioned at variable vertical angles. The coupling plate is supplied including 4x ESL-SB-H Eurostrut fixing set (carriage bolt M10x20, nut, and washer). The connection to the side rails is established by means of bolted joints. The coupling plate is compatible with straight ECL60 cable ladders and associated system components.

Technical specifications

Product Type:	Vertically Hinged Splice Plate for ECL Cable Ladder
Product Code:	EVHCP60
System:	ECL60
System Height:	60 mm
Actual Height:	54 mm
Length:	270 mm
Material Thickness:	2 mm
Side Rail Perforation:	25 × 11 mm
Standard Material:	Carbon Steel
Surface Finish:	Hot-dip galvanized in accordance with NEN-EN-ISO 1461
Zinc Coating Thickness:	Minimum 60 µm
Hinge Function:	Vertically adjustable
Connection Direction:	Vertical
Connection Method:	Bolted
Construction:	Integrated splice plates, supplied with 4 × ESL-SB M10×20 fixing sets (carriage bolts, nuts, and washers)
Standards:	IEC 61537, suitable for installations in accordance with NEN 1010
Configuration:	Mechanical connection between cable ladder sections at a variable vertical angle

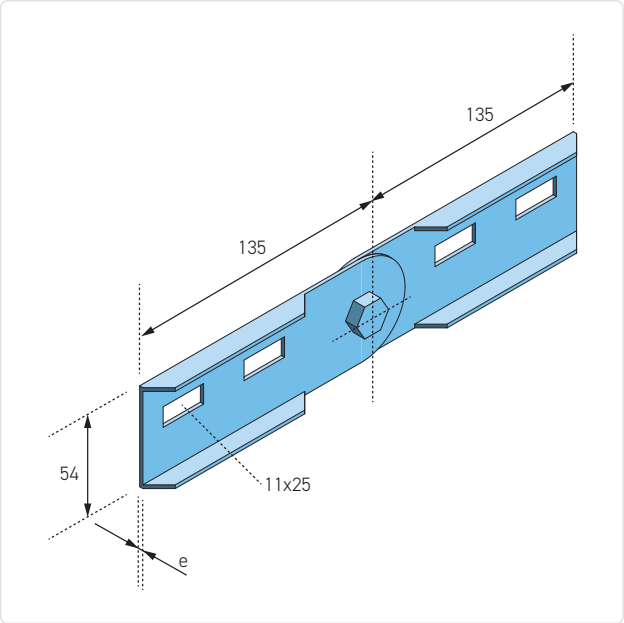

Available material variants

HDG: Hot-dip galvanized carbon steel in accordance with NEN-EN-ISO 1461, with a high coating thickness of at least 60 µm, suitable for heavy industrial and outdoor environments.
SS 304 (A2 / 1.4301): Stainless steel for indoor environments and lightly corrosive conditions.
SS 316L (A4 / 1.4404): Stainless steel with increased corrosion resistance for chemical, maritime, and offshore applications.

RAL powder coating available on request.

Variants

Article number	L mm	H mm	e mm	kg/ unit
EVHCP60-HDG	270	54	2	0.32
EVHCP60-304	270	54	2	0.32
EVHCP60-316	270	54	2	0.32

Overview ECL Cable Ladder 60 mm

