EHHCP60
Coupler Plate Horizontal Cable Ladder ECL60

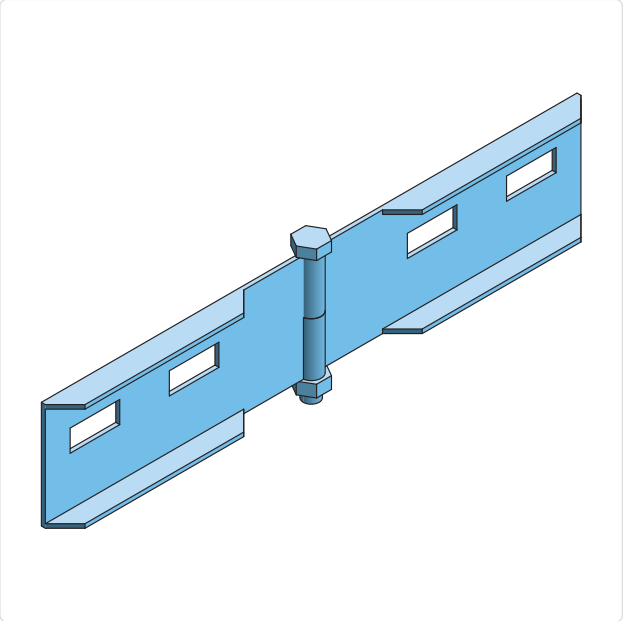

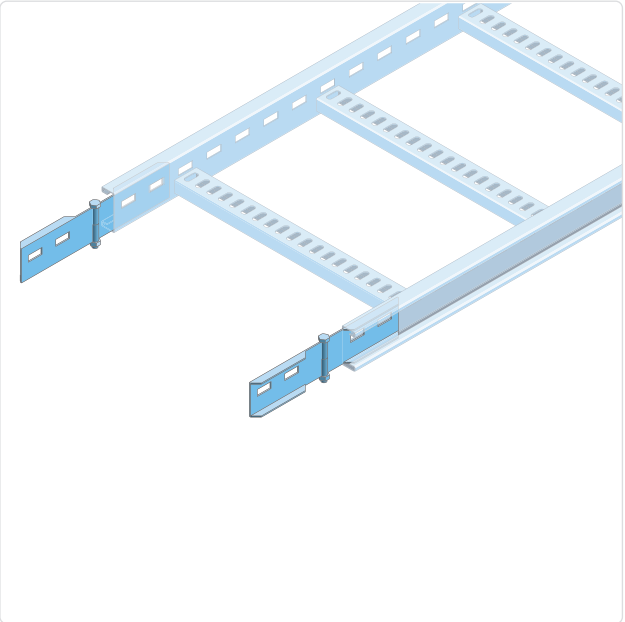

- Standard execution **hot dip galvanized carbon steel** in accordance with NEN-EN-ISO 1461
- High zinc coating thickness of **at least 60 µm**
- Also available in **stainless steel 304** and **stainless steel 316L**

Description

The Eurostrut EHHCP60 Heavy Duty horizontal hinged coupling plate is a connection component for the ECL60 cable ladder system and is used to mechanically connect cable ladder sections at variable horizontal angles. The hinged design allows horizontal changes of direction within a cable ladder route without requiring a bend with a fixed angle. The coupling plate is installed at the side rails and is suitable for industrial, commercial, and infrastructure installations.

The standard EHHCP60-HDG version is manufactured from carbon steel with a material thickness of 2.0 mm. The steel is hot dip galvanized according to NEN-EN-ISO 1461, with a zinc coating thickness of 60 to 70 µm. Hot dip galvanizing provides corrosion protection for the steel coupling plate in industrial installations and outdoor environments. The coupling plate is also available on request in stainless steel AISI 304 (1.4301) and AISI 316L (1.4404). A RAL powder-coated version is also available on request.

The EHHCP60 horizontal hinged coupling plate has a height of 54 mm and an overall length of 270 mm. The Heavy Duty version is manufactured from 2.0 mm steel and consists of horizontally hinged plate sections that allow adjoining cable ladders to be positioned at variable horizontal angles. The coupling plate is supplied including 4x ESL-SB-H Eurostrut fixing set (carriage bolt M10x20, nut, and washer). The connection to the side rails is established by means of bolted joints. The coupling plate is compatible with straight ECL60 cable ladders and associated system components.

Technical specifications

Product Type:	Horizontally Hinged Splice Plate for ECL Cable Ladder
Product Code:	EHHCP60
System:	ECL60
System Height:	60 mm
Actual Height:	54 mm
Length:	270 mm
Material Thickness:	2 mm
Side Rail Perforation:	25 × 11 mm
Standard Material:	Carbon Steel
Surface Finish:	Hot-dip galvanized in accordance with NEN-EN-ISO 1461
Zinc Coating Thickness:	Minimum 60 µm
Hinge Function:	Horizontally adjustable
Connection Direction:	Horizontal
Connection Method:	Bolted
Construction:	Integrated splice plates, supplied with 4 × ESL-SB M10×20 fixing sets (carriage bolts, nuts, and washers)
Standards:	IEC 61537, suitable for installations in accordance with NEN 1010
Configuration:	Mechanical connection between cable ladder sections at a variable horizontal angle

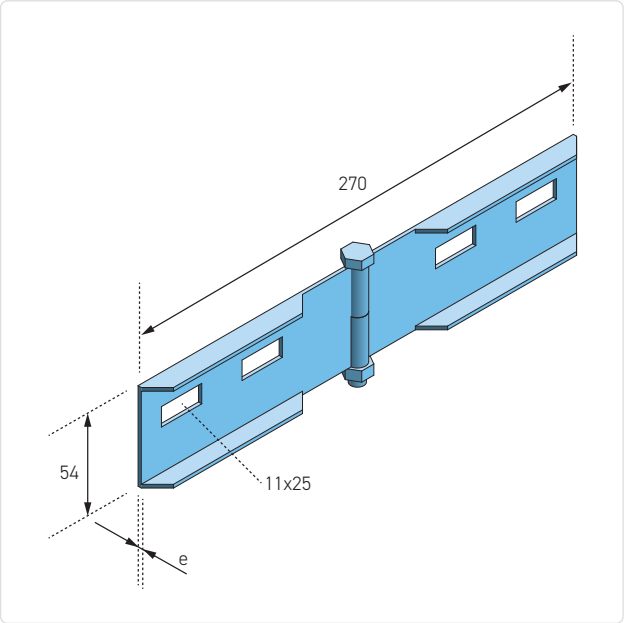

Available material variants

HDG: Hot-dip galvanized carbon steel in accordance with NEN-EN-ISO 1461, with a high coating thickness of at least 60 µm, suitable for heavy industrial and outdoor environments.
SS 304 (A2 / 1.4301): Stainless steel for indoor environments and lightly corrosive conditions.
SS 316L (A4 / 1.4404): Stainless steel with increased corrosion resistance for chemical, maritime, and offshore applications.

RAL powder coating available on request.

Variants

Article number	L mm	H mm	e mm	kg/ unit
EHHCP60-HDG	270	54	2	0.75
EHHCP60-304	270	54	2	0.75
EHHCP60-316	270	54	2	0.75

Overview ECL Cable Ladder 60 mm

