EWC
Wing Clamp Cable Ladder



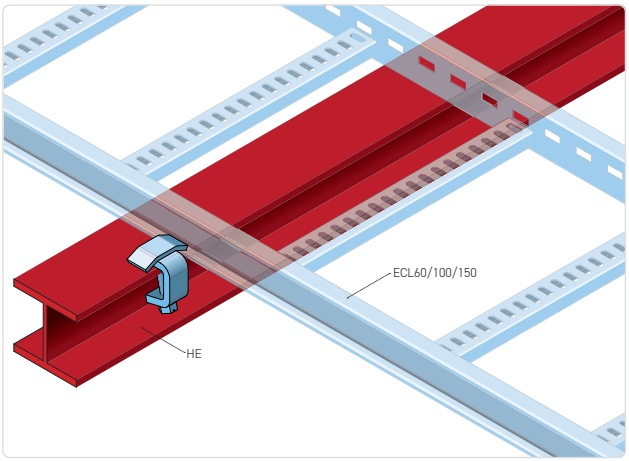

- Standard execution **hot-dip galvanized carbon steel** in accordance with NEN-EN-ISO 1461
- High zinc coating thickness of **at least 60 µm**
- For fast and **drill-free installation** of ECL60, ECT60 and ECT100 on a H-beam

Description

Beam clamp EWC is a mounting accessory for cable management systems and is used for fixing ECL cable ladders to steel H-beam structures. The clamp enables drill-free installation and ensures a stable and mechanically secure fixation to supporting structures. Suitable for ECL60, ECL100 and ECL150 cable ladders in industrial and utility installations.

The version is manufactured from carbon steel and hot-dip galvanized according to NEN-EN-ISO 1461, with a minimum zinc layer thickness of 85 µm. This corrosion protection makes the clamp suitable for use in industrial and outdoor environments. The hot-dip galvanizing process is carried out after fabrication and protects the entire surface, including cut edges, in accordance with IEC 61537 and installations according to NEN 1010.

The beam clamp has a robust construction with a material thickness of 10.0 mm and is suitable for mounting on H-beams with a clamping range from HE100 up to HE1000. The clamp is mounted directly onto the flange of the steel structure and secured using the included M12x45 bolt. The design is fully compatible with Eurostrut cable ladders and associated mounting components.

Technical Specifications

Product Type:	Fixing Accessory – Wing Clamp
Application:	Drill-free installation on H-beams (steel structures)
Compatibility:	ECL60, ECL100 and ECL150 cable ladders
Clamping Range:	HE100 to HE1000
Height:	60 mm
Width:	30 mm
Material Thickness (E):	10 mm
Bolt Size:	M12×45
Material:	Carbon Steel
Surface Finish:	Hot-dip galvanized in accordance with NEN-EN-ISO 1461
Zinc Coating Thickness:	Minimum 85 µm
Standards:	IEC 61537, suitable for installations in accordance with NEN 1010

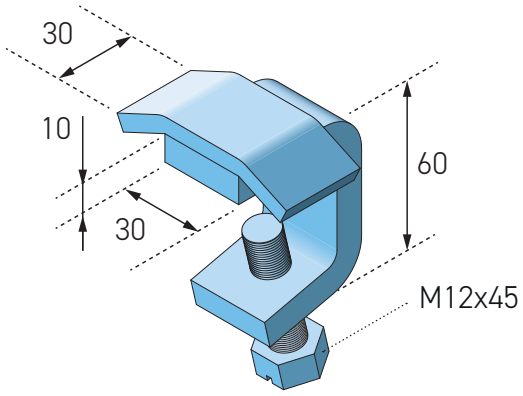

Article number	W mm	H mm	e mm	kg/ unit
EWC-HDG	30	60	10.0	0.425

Overview ECL Cable Ladder 100mm

